Docusign Envelope ID: F79B754F-492F-80F2-8353-B747876476DC

01/16/24

CONTRACT: DK00482 TIP PROJECT: HB-0044/HB-0050/HB-0053

See Sheet 1A For Index of Sheets
See Sheet 1B For Conventional Symbols

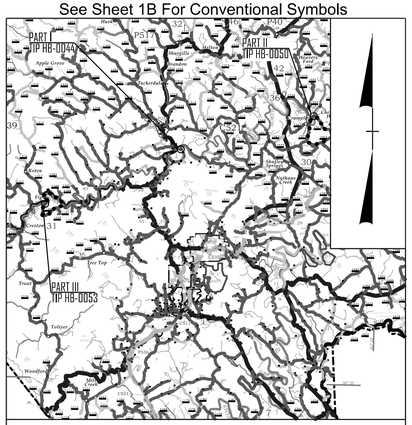

VICINITY MAP (NTS)

STATE OF NORTH CAROLINA
DIVISION OF HIGHWAYS

ASHE COUNTY

LOCATION: *REPLACE AND REALIGN BRIDGE NO. 040093 ON SR 1644 (MCNEIL ROAD) OVER NORTH FORK NEW RIVER*
REPLACE BRIDGE NO. 040463 ON SR 1563 (CLIFTON ROAD) OVER NORTH FORK NEW RIVER
REPLACE BRIDGE NO. 040480 ON SR 1126 (ED LITTLE ROAD) OVER NORTH FORK NEW RIVER

TYPE OF WORK: *GRADING, PAVING, STRUCTURE, AND DRAINAGE*

STATE	STATE PROJECT REFERENCE NO.	SHEET NO.	TOTAL SHEETS
N.C.	HB-004/HB-0050/HB-0053	1	

STATE PROJ. NO.	F. A. PROJ. NO.	DESCRIPTION
50714.1.1	FBRG111	P.E.
50714.2.1	FBRG111	R/W
50714.2.2	FBRG111	UTILITIES
50714.3.1	FBRG111	CONSTRUCTION
50720.1.1	FBRG111	P.E.
50720.2.1	FBRG111	R/W
50720.2.2	FBRG111	UTILITIES
50720.3.1	FBRG111	CONSTRUCTION
50723.1.1	FBRG111	P.E.
50723.2.1	FBRG111	R/W
50723.2.2	FBRG111	UTILITIES
50723.3.1	FBRG111	CONSTRUCTION

FINAL PLANS

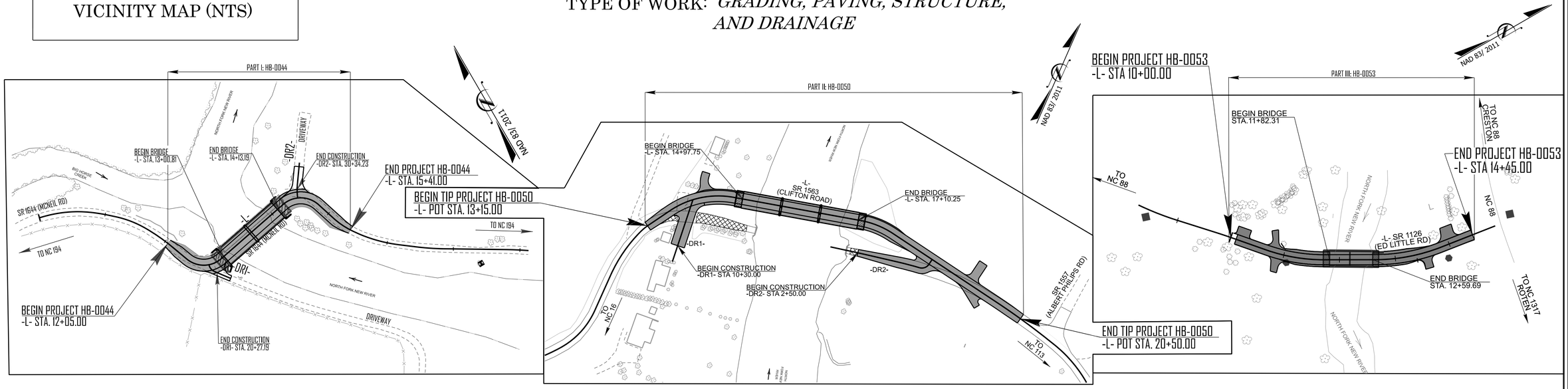

DOCUMENT NOT CONSIDERED FINAL UNLESS ALL SIGNATURES COMPLETED

GRAPHIC SCALES HB-0044

20 10 0 20 40 — PLANS
20 10 0 20 40 — PROFILE (HORIZONTAL)
10 5 0 10 20 — PROFILE (VERTICAL)

GRAPHIC SCALES HB-0050

50 25 0 50 100 — PLANS
50 25 0 50 100 — PROFILE (HORIZONTAL)
10 5 0 10 20 — PROFILE (VERTICAL)

GRAPHIC SCALES HB-0053

30 15 0 30 60 — PLANS
30 15 0 30 60 — PROFILE (HORIZONTAL)
6 3 0 6 12 — PROFILE (VERTICAL)

PROJECT LENGTH

LENGTH OF ROADWAY TIP PROJECT
HB-0044/HB-0050/HB-0053 = 0.211 MILES

LENGTH OF STRUCTURE TIP PROJECT
HB-0044/HB-0050/HB-0053 = 0.076 MILES

TOTAL LENGTH PROJECT
HB-0044/HB-0050/HB-0053 =0.287 MILES

PREPARED BY:
ms consultants, inc.
5444 Wade Park Blvd.
Suite 160
Raleigh, NC 27607
NC License Number : C-3239

2024 STANDARD SPECIFICATIONS

RIGHT OF WAY DATE:
HB-0044/HB-0050/HB-0053
8/15/2025

LETTING DATE:
HB-0044/HB-0050/HB-0053
09/17/2026

PREPARED FOR:
DIVISION OF HIGHWAYS
DIVISION 11
801 Statesville Rd.
North Wilkesboro NC, 28659

RAMIE SHAW, PE
NCDOT CONTACT

DAVID JANOSKO, PE
PROJECT ENGINEER

SKYLAR STULTZ, EIT
PROJECT DESIGN ENGINEER

HYDRAULICS ENGINEER
MI ENGINEERING
1011 SCHAUB DRIVE, SUITE 100
RALEIGH, NC 27606
(919) 851-6606
FIRM PE NUMBER : P-0671

DocuSigned by:
Herb Turner
F2C0DA4B09D0D420...
8/7/2026 P.E.
SIGNATURE:

NORTH CAROLINA PROFESSIONAL SEAL 021162 ENGINEER W. HERBERT TURNER, III

PROJECT ENGINEER

DocuSigned by:
David Janosko
F2C0DA4B09D0D420...
8/7/2026 P.E.
SIGNATURE:

NORTH CAROLINA PROFESSIONAL SEAL 043023 ENGINEER DAVID V. JANOSKO

STATE OF NORTH CAROLINA • DEPARTMENT OF TRANSPORTATION •

Docusign Envelope ID: 1623FB64-AC73-83AD-82C3-465B8E874CF5

PART I HB-0044: INDEX OF SHEETS

SHEET NUMBER	SHEET
1	TITLE SHEET
1A	INDEX OF SHEETS, GENERAL NOTES, AND STANDARD DRAWINGS
1B	CONVENTIONAL SYMBOLS
2A-1	PAVEMENT SCHEDULE AND TYPICAL SECTIONS
2C-1	DETAIL IN LIEU OF STANDARD 300.01 METHOD OF PIPE INSTALLATION (SHEET 1 OF 2)
2C-2	DETAIL IN LIEU OF STANDARD 300.01 METHOD OF PIPE INSTALLATION (SHEET 2 OF 2)
2C-3	DETAIL IN LIEU OF STANDARD 862.01 GUARDRAIL PLACEMENT (SHEET 4 OF 15)
2C-4	DETAIL IN LIEU OF STANDARD 862.01 GUARDRAIL PLACEMENT (SHEET 6 OF 15)
2C-5	DETAIL IN LIEU OF STANDARD TYPE III SC TYPE III SHOP CURVED (SHEET 1 OF 1)
3B-1	ROADWAY SUMMARIES
3D-1	DRAINAGE SUMMARIES
3G-1	GEOTECHNICAL SUMMARIES
4	PLAN SHEET
5	PROFILE SHEET
RW-1 THRU RW-4	RIGHT-OF-WAY PLANS
EC-1 THRU EC-5	EROSION CONTROL PLANS
TMP-1 THRU TMP-3	TRANSPORTATION MANAGEMENT PLANS
PMP-1 THRU PMP-2	PAVEMENT MARKING PLANS
X-1	CROSS-SECTION INDEX
X-1A	CROSS-SECTION SUMMARY SHEET
X-2 THRU X-9	CROSS-SECTIONS
S-1 THRU S-23	STRUCTURE PLANS

PART II HB-0050: INDEX OF SHEETS

SHEET NUMBER	SHEET
1	TITLE SHEET
1A	INDEX OF SHEETS, GENERAL NOTES, AND STANDARD DRAWINGS
1B	CONVENTIONAL SYMBOLS
2A-1	PAVEMENT SCHEDULE AND TYPICAL SECTIONS
2B-1	GEOMETRY AND RIGHT-OF-WAY DETAIL
2C-1	DETAIL IN LIEU OF STANDARD 300.01 METHOD OF PIPE INSTALLATION (SHEET 1 OF 2)
2C-2	DETAIL IN LIEU OF STANDARD 300.01 METHOD OF PIPE INSTALLATION (SHEET 2 OF 2)
2C-3	DETAIL IN LIEU OF STANDARD 862.01 GUARDRAIL PLACEMENT (SHEET 4 OF 15)
2C-4	DETAIL IN LIEU OF STANDARD 862.01 GUARDRAIL PLACEMENT (SHEET 6 OF 15)
2C-5	DETAIL IN LIEU OF STANDARD 862.01 GUARDRAIL PLACEMENT (SHEET 11 OF 15)
2C-6	DETAIL IN LIEU OF STANDARD 862.02 GUARDRAIL INSTALLATION (SHEET 5 OF 9)
3B-1	ROADWAY SUMMARY
3D-1	DRAINAGE SUMMARY
4	PLAN SHEET
5	PROFILE SHEET
RW01 THRU RW04	RIGHT-OF-WAY PLANS
EC-1 THRU EC-5	EROSION CONTROL PLANS
TMP-1 THRU TMP-3	TRANSPORTATION MANAGEMENT PLANS
PMP-1 THRU PMP-2	PAVEMENT MARKING PLANS
X-1	CROSS-SECTION INDEX
X-1A	CROSS-SECTION SUMMARY SHEET
X-2 THRU X-15	CROSS-SECTIONS
S-1 THRU S-23	STRUCTURE PLANS

PART III: HB-0053 INDEX OF SHEETS

SHEET NUMBER	SHEET
1	TITLE SHEET
1A	INDEX OF SHEETS, GENERAL NOTES, AND STANDARD DRAWINGS
1B	CONVENTIONAL SYMBOLS
2A-1	PAVEMENT SCHEDULE AND TYPICAL SECTIONS
2B-1	GEOMETRY AND RIGHT-OF-WAY DETAIL
2C-1	DETAIL IN LIEU OF STANDARD 300.01 METHOD OF PIPE INSTALLATION (SHEET 1 OF 2)
2C-2	DETAIL IN LIEU OF STANDARD 300.01 METHOD OF PIPE INSTALLATION (SHEET 2 OF 2)
2C-3	DETAIL IN LIEU OF STANDARD 862.01 GUARDRAIL PLACEMENT (SHEET 4 OF 15)
2C-4	DETAIL IN LIEU OF STANDARD 862.01 GUARDRAIL PLACEMENT (SHEET 6 OF 15)
2C-5	DETAIL IN LIEU OF STANDARD MODFLMDTCH MODIFIED CONCRETE FLUME (SHEET 1 OF 1)
3B-1	ROADWAY SUMMARY
3D-1	DRAINAGE SUMMARY
3G-1	GEOTECHNICAL SUMMARY
4	PLAN SHEET
5	PROFILE SHEET
RW-1 THRU RW-4	RIGHT-OF-WAY PLANS
TMP-1 THRU TMP-3	TRAFFIC MANAGEMENT PLANS
PMP-1 THRU PMP-2	PAVEMENT MARKING PLANS
EC-1 THRU EC-5	EROSION CONTROL PLANS
UO-1 THRU UO-2	UTILITIES BY OTHERS PLANS
X-1	CROSS-SECTION INDEX
X-1A	CROSS-SECTION SUMMARY SHEET
X-2 THRU X-8	CROSS-SECTIONS
S-1 THRU S-23	STRUCTURE PLANS

GENERAL NOTES:

2024 SPECIFICATIONS
EFFECTIVE: 01-16-2024
REVISED:

GRADING AND SURFACING OR RESURFACING AND WIDENING:

THE GRADE LINES SHOWN DENOTE THE FINISHED ELEVATION OF THE PROPOSED SURFACING AT GRADE POINTS SHOWN ON THE TYPICAL SECTIONS. WHERE NO GRADE LINES ARE SHOWN, THE PROFILES SHOWN DENOTE THE TOP ELEVATION OF THE EXISTING PAVEMENT ALONG THE CENTER LINE OF SURVEY ON WHICH THE PROPOSED RESURFACING WILL BE PLACED. GRADE LINES MAY BE ADJUSTED BY THE ENGINEER IN ORDER TO SECURE A PROPER TIE-IN.

CLEARING:

CLEARING ON THIS PROJECT SHALL BE PERFORMED TO THE LIMITS ESTABLISHED BY METHOD III.

SUPERELEVATION:

ALL CURVES ON THIS PROJECT SHALL BE SUPERELEVATED IN ACCORDANCE WITH **STD. NO. 225.04** USING THE RATE OF SUPERELEVATION AND RUNOFF SHOWN ON THE PLANS. SUPERELEVATION IS TO BE REVOLVED ABOUT THE GRADE POINTS SHOWN ON THE TYPICAL SECTIONS.

SHOULDER CONSTRUCTION:

ASPHALT, EARTH, AND CONCRETE SHOULDER CONSTRUCTION ON THE HIGH SIDE OF SUPERELEVATED CURVES SHALL BE IN ACCORDANCE WITH **STD. NO. 560.01**

SUBSURFACE DRAINS:

SUBSURFACE DRAINS SHALL BE CONSTRUCTED IN ACCORDANCE WITH STD. NO. 815.02 AT LOCATIONS DIRECTED BY THE ENGINEER.

DRIVEWAYS:

DRIVEWAYS SHALL BE CONSTRUCTED IN ACCORDANCE WITH STD. 848.02 USING 3 FOOT RADII OR RADII AS SHOWN ON THE PLANS. LOCATIONS OF DRIVES WILL BE AS SHOWN ON THE PLANS OR AS DIRECTED BY THE ENGINEER.

GUARDRAIL:

THE GUARDRAIL LOCATIONS SHOWN ON THE PLANS MAY BE ADJUSTED DURING CONSTRUCTION AS DIRECTED BY THE ENGINEER. THE CONTRACTOR SHOULD CONSULT WITH THE ENGINEER PRIOR TO ORDERING GUARDRAIL MATERIAL.

TEMPORARY SHORING:

SHORING REQUIRED FOR THE MAINTENANCE OF TRAFFIC WILL BE PAID FOR AS "EXTRA WORK" IN ACCORDANCE WITH SECTION 104-7.

END BENTS:

THE ENGINEER SHALL CHECK THE STRUCTURE END BENT PLANS, DETAILS, AND CROSS-SECTION PRIOR TO SETTING OF THE SLOPE STAKES FOR THE EMBANKMENT OR EXCAVATION APPROACHING A BRIDGE.

UTILITIES:

HB-0044/HB-0050:
ANY RELOCATION OF EXISTING UTILITIES WILL BE ACCOMPLISHED BY OTHERS.

HB-0053:
ANY RELOCATION OF EXISTING UTILITIES WILL BE ACCOMPLISHED BY OTHERS.
A) BLUE RIDGE ENERGY EMC - POWER
B) SKYLINE MEMBERSHIP CORP - TELEPHONE

RIGHT-OF-WAY MARKERS:

ALL RIGHT-OF-WAY MARKERS ON THIS PROJECT SHALL BE PLACED BY OTHERS.

INDEX OF SHEETS

2024 ROADWAY ENGLISH STANDARD DRAWINGS: EFFECTIVE: 08-11-2025
REV. 11-26-2025

STD.	TITLE
DIVISION 2 - EARTHWORK	
200.03	Method of Clearing - Method III
225.02	Guide for Grading Subgrade - Secondary and Local
225.04	Method of Obtaining Superelevation - Two Lane Pavement
DIVISION 3 - PIPE CULVERTS	
300.01	Method of Pipe Installation (Use Details In Lieu of Standard)
310.10	Driveway Pipe Construction
DIVISION 4 - MAJOR STRUCTURES	
423.01	Bridge Approach Fills - Type 1 Approach Fill for Bridge Abutment
DIVISION 5 - SUBGRADE, BASES AND SHOULDERS	
560.01	Method of Shoulder Construction - High Side of Superelevated Curve - Method I
DIVISION 8 - INCIDENTALS	
815.02	Subsurface Drain
840.00	Concrete Base Pad for Drainage Structures
840.14	Concrete Drop Inlet - 12" thru 30" Pipe
840.15	Brick Drop Inlet - 12" thru 30" Pipe
840.16	Drop Inlet Frame and Grates - for use with Std. Dwg 840.14 and 840.15
840.25	Anchorage for Frames - Brick or Concrete or Precast
840.29	Frames and Narrow Slot Flat Grates
840.35	Trafffic Bearing Grated Drop Inlet
840.45	Precast Drainage Structure
840.46	Traffic Bearing Precast Drainage Structure
840.66	Drainage Structure Steps
846.01	Concrete Curb, Gutter and Curb & Gutter
846.04	Drop Inlet Installation in Shoulder Berm Gutter
848.02	Driveway Turnout - Radius Type
850.01	Concrete Paved Ditches
850.10	Guide for Berm Drainage Outlet - 15" and 18" Pipe
850.11	Guide for Berm Drainge Outlet - 24" and 30" Pipe
862.01	Guardrail Placement (Use Details in Lieu of Standards for Sheets 4, 6, and 11 of 15)
862.02	Guardrail Installation (Use Detail in Lieu of Standard for Sheet 5 of 9)
862.03	Structure Anchor Units
876.01	Rip Rap in Channels and Ditches
876.02	Guide for Rip Rap at Pipe Outlets
876.04	Drainage Ditches with Class 'B' Rip Rap

NORTH CAROLINA
DEPARTMENT OF TRANSPORTATION
ASHE COUNTY

ROADWAY DESIGN UNIT

ROADWAY DESIGN ENGINEER
NORTH CAROLINA PROFESSIONAL SEAL 043023 ENGINEER DAVID V. JANOSKO
Docusigned by: David Janosko 8/16/2026

PREPARED BY
ms consultants, inc.
5444 Wade Park Blvd.
Suite 160
Raleigh, NC 27607
NC License Number: C-3230

DOCUMENT NOT CONSIDERED FINAL UNLESS ALL SIGNATURES COMPLETED

REVISIONS

Docusign Envelope ID: 3F55B26C-7C78-8EA2-8391-D494428306FB

01/16/24

TIP PROJECT: HB-0044

CONTRACT: DK00482

See Sheet 1A For Index of Sheets
See Sheet 1B For Conventional Symbols

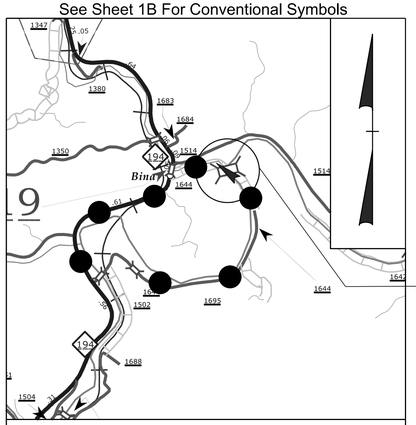

VICINITY MAP (NTS)
OFFSITE DETOUR ROUTE

STATE OF NORTH CAROLINA
DIVISION OF HIGHWAYS

ASHE COUNTY

LOCATION: *REPLACE AND REALIGN BRIDGE NO. 040093 ON SR 1644 (MCNEIL ROAD) OVER NORTH FORK NEW RIVER*

TYPE OF WORK: *GRADING, PAVING, STRUCTURE AND DRAINAGE*

STATE	STATE PROJECT REFERENCE NO.	SHEET NO.	TOTAL SHEETS
N.C.	HB-0044	1	

STATE PROJ. NO.	F. A. PROJ. NO.	DESCRIPTION
50714.1.1	FBRG111	P.E.
50714.2.1	FBRG111	R/W
50714.2.2	FBRG111	UTILITIES
50714.3.1	FBRG111	CONSTRUCTION

FINAL PLANS

NAD 83/2011

4

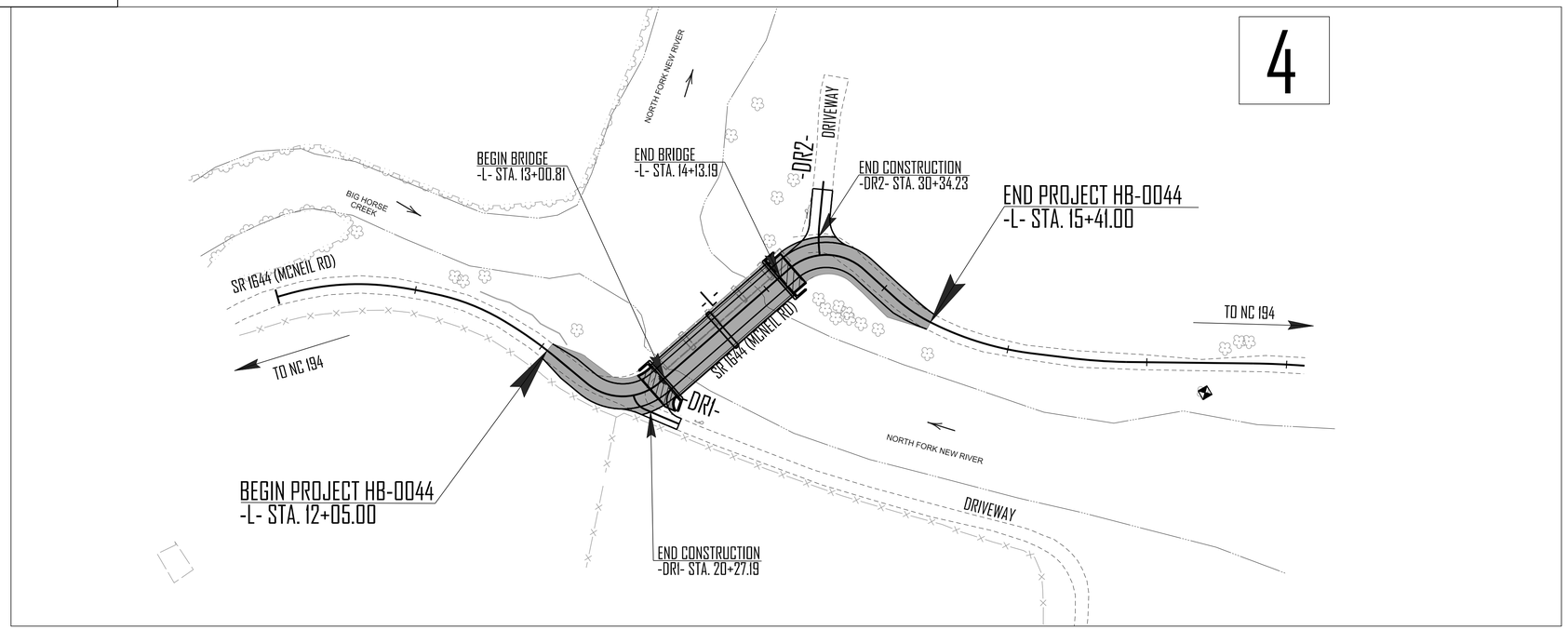

**DESIGN EXCEPTION FOR DESIGN SPEED, 15 MPH
THIS PROJECT IS NOT WITHIN ANY MUNICIPAL BOUNDARIES.

GRAPHIC SCALES

20 10 0 20 40
PLANS

20 10 0 20 40
PROFILE (HORIZONTAL)

10 5 0 10 20
PROFILE (VERTICAL)

DESIGN DATA

ADT 2025 = 170
ADT 2045 = 253
V = 15 MPH**
T = 3%
(2% DUALS
1% TTST)

FUNC CLASS =
RURAL LOCAL
SUBREGIONAL TIER

PROJECT LENGTH

LENGTH OF ROADWAY TIP PROJECT HB-0044 = 0.043 MILES

LENGTH OF STRUCTURE TIP PROJECT HB-0044 = 0.021 MILES

TOTAL LENGTH PROJECT HB-0044 = 0.064 MILES

PREPARED BY:
ms consultants, inc.
5444 Wade Park Blvd.
Suite 160
Raleigh, NC 27607
NC License Number : C-3239

2024 STANDARD SPECIFICATIONS

RIGHT OF WAY DATE:
8/15/2025

LETTING DATE:
9/17/2026

PREPARED FOR:
DIVISION OF HIGHWAYS
DIVISION 11
801 Statesville Rd.,
North Wilkesboro NC, 28659

RAMIE SHAW, PE
NCDOT CONTACT

DAVID JANOSKO, PE
PROJECT ENGINEER

SKYLAR STULTZ, EIT
PROJECT DESIGN ENGINEER

HYDRAULICS ENGINEER
MI ENGINEERING
1011 SCHAUB DRIVE, SUITE 100
RALEIGH, NC 27606
(919) 851-6606
FIRM PE NUMBER : P-0671

DocuSigned by: Herb Turner 7/28/2026 P.E.
SIGNATURE:

NORTH CAROLINA PROFESSIONAL SEAL 021162 ENGINEER W. HERBERT TURNER, JR.

ROADWAY DESIGN ENGINEER

DocuSigned by: David Janosko 7/28/2026 P.E.
SIGNATURE:

NORTH CAROLINA PROFESSIONAL SEAL 043023 ENGINEER DAVID V. JANOSKO

STATE OF NORTH CAROLINA DEPARTMENT OF TRANSPORTATION

Docusign Envelope ID: 1623FB64-AC73-83AD-82C3-465B8E874CF5

INDEX OF SHEETS

SHEET NUMBER	SHEET
1	TITLE SHEET
1A	INDEX OF SHEETS, GENERAL NOTES, AND STANDARD DRAWINGS
1B	CONVENTIONAL SYMBOLS
2A-1	PAVEMENT SCHEDULE AND TYPICAL SECTIONS
2C-1	DETAIL IN LIEU OF STANDARD 300.01 METHOD OF PIPE INSTALLATION (SHEET 1 OF 2)
2C-2	DETAIL IN LIEU OF STANDARD 300.01 METHOD OF PIPE INSTALLATION (SHEET 2 OF 2)
2C-3	DETIAL IN LIEU OF STANDARD 862.01 GUARDRAIL PLACEMENT (SHEET 4 OF 15)
2C-4	DETIAL IN LIEU OF STANDARD 862.01 GUARDRAIL PLACEMENT (SHEET 6 OF 15)
2C-5	DETIAL IN LIEU OF STANDARD TYPE III SC TYPE III SHOP CURVED (SHEET 1 OF 1)
3B-1	ROADWAY SUMMARIES
3D-1	DRAINAGE SUMMARIES
3G-1	GEOTECHNICAL SUMMARIES
4	PLAN SHEET
5	PROFILE SHEET
RW01 THRU RW04	RIGHT-OF-WAY PLANS
EC-1 THRU EC-5	EROSION CONTROL PLANS
TMP-1 THRU TMP-3	TRANSPORTATION MANAGEMENT PLANS
PMP-1 THRU PMP-2	PAVEMENT MARKING PLANS
X-1	CROSS-SECTION INDEX
X-1A	CROSS-SECTION SUMMARY SHEET
X-2 THRU X-9	CROSS-SECTIONS
S-1 THRU S-23	STRUCTURE PLANS

GENERAL NOTES:

2024 SPECIFICATIONS
EFFECTIVE: 01-16-2024
REVISED:

GRADING AND SURFACING OR RESURFACING AND WIDENING:
THE GRADE LINES SHOWN DENOTE THE FINISHED ELEVATION OF THE PROPOSED SURFACING AT GRADE POINTS SHOWN ON THE TYPICAL SECTIONS. WHERE NO GRADE LINES ARE SHOWN, THE PROFILES SHOWN DENOTE THE TOP ELEVATION OF THE EXISTING PAVEMENT ALONG THE CENTER LINE OF SURVEY ON WHICH THE PROPOSED RESURFACING WILL BE PLACED. GRADE LINES MAY BE ADJUSTED BY THE ENGINEER IN ORDER TO SECURE A PROPER TIE-IN.

CLEARING:
CLEARING ON THIS PROJECT SHALL BE PERFORMED TO THE LIMITS ESTABLISHED BY METHOD III.

SUPERELEVATION:
ALL CURVES ON THIS PROJECT SHALL BE SUPERELEVATED IN ACCORDANCE WITH **STD. NO. 225.04** USING THE RATE OF SUPERELEVATION AND RUNOFF SHOWN ON THE PLANS. SUPERELEVATION IS TO BE REVOLVED ABOUT THE GRADE POINTS SHOWN ON THE TYPICAL SECTIONS.

SHOULDER CONSTRUCTION:
ASPHALT, EARTH, AND CONCRETE SHOULDER CONSTRUCTION ON THE HIGH SIDE OF SUPERELEVATED CURVES SHALL BE IN ACCORDANCE WITH **STD. NO. 560.01**

SUBSURFACE DRAINS:
SUBSURFACE DRAINS SHALL BE CONSTRUCTED IN ACCORDANCE WITH STD. NO. 815.02 AT LOCATIONS DIRECTED BY THE ENGINEER.

DRIVEWAYS:
DRIVEWAYS SHALL BE CONSTRUCTED IN ACCORDANCE WITH STD. 848.02 USING 3 FOOT RADII OR RADII AS SHOWN ON THE PLANS. LOCATIONS OF DRIVES WILL BE AS SHOWN ON THE PLANS OR AS DIRECTED BY THE ENGINEER.

GUARDRAIL:
THE GUARDRAIL LOCATIONS SHOWN ON THE PLANS MAY BE ADJUSTED DURING CONSTRUCTION AS DIRECTED BY THE ENGINEER. THE CONTRACTOR SHOULD CONSULT WITH THE ENGINEER PRIOR TO ORDERING GUARDRAIL MATERIAL.

TEMPORARY SHORING:
SHORING REQUIRED FOR THE MAINTENANCE OF TRAFFIC WILL BE PAID FOR AS "EXTRA WORK" IN ACCORDANCE WITH SECTION 104-7.

END BENTS:
THE ENGINEER SHALL CHECK THE STRUCTURE END BENT PLANS, DETAILS, AND CROSS-SECTION PRIOR TO SETTING OF THE SLOPE STAKES FOR THE EMBANKMENT OR EXCAVATION APPROACHING A BRIDGE.

UTILITIES:
ANY RELOCATION OF EXISTING UTILITIES WILL BE ACCOMPLISHED BY OTHERS.

RIGHT-OF-WAY MARKERS:
ALL RIGHT-OF-WAY MARKERS ON THIS PROJECT SHALL BE PLACED BY OTHERS.

INDEX OF SHEETS

2024 ROADWAY ENGLISH STANDARD DRAWINGS:

EFFECTIVE: 08-11-2025
REV. 11-26-2025

STD.	TITLE
DIVISION 2 - EARTHWORK	
200.03	Method of Clearing - Method III
225.02	Guide for Grading Subgrade - Secondary and Local
225.04	Method of Obtaining Superelevation - Two Lane Pavement
DIVISION 3 - PIPE CULVERTS	
300.01	Method of Pipe Installation (Use Details In Lieu of Standard)
DIVISION 4 - MAJOR STRUCTURES	
423.01	Bridge Approach Fills - Type 1 Approach Fill for Bridge Abutment
DIVISION 5 - SUBGRADE, BASES AND SHOULDERS	
560.01	Method of Shoulder Construction - High Side of Superelevated Curve - Method I
DIVISION 8 - INCIDENTALS	
815.02	Subsurface Drain
840.00	Concrete Base Pad for Drainage Structures
840.29	Frames and Narrow Slot Flat Grates
840.35	Traffic Bearing Grated Drop Inlet
840.66	Drainage Structure Steps
846.01	Concrete Curb, Gutter and Curb & Gutter
846.04	Drop Inlet Installation in Shoulder Berm Gutter
848.02	Driveway Turnout
862.01	Guardrail Placement (Use Details In Lieu of Standard for Sheets 4 and 6 of 15)
862.02	Guardrail Installation
862.03	Structure Anchor Units
876.01	Rip Rap in Channels and Ditches
876.02	Guide for Rip Rap at Pipe Outlets
876.04	Drainage Ditches with Class 'B' Rip Rap

HB-0044

1A

NORTH CAROLINA
DEPARTMENT OF TRANSPORTATION
ASHE COUNTY

ROADWAY DESIGN UNIT

ROADWAY DESIGN ENGINEER

NORTH CAROLINA PROFESSIONAL SEAL 043023 ENGINEER DAVID V. JANOSKO

DocuSigned by: David Janosko 8/16/2026
1F3DDCEF8D9E4...

PREPARED BY

ms consultants, inc.
5444 Wade Park Blvd.
Suite 160
Raleigh, NC 27607
NC License Number : C-3230

DOCUMENT NOT CONSIDERED FINAL UNLESS ALL SIGNATURES COMPLETED

REVISIONS

05/20/24

HB-0044
001B

STATE OF NORTH CAROLINA, DIVISION OF HIGHWAYS

CONVENTIONAL PLAN SHEET SYMBOLS

Note: Not to Scale

BOUNDARIES AND PROPERTY:

- State Line
- County Line
- Township Line
- City Line
- Reservation Line
- Property Line
- Existing Iron Pin (EIP)
- Computed Property Corner
- Existing Concrete Monument (ECM)
- Parcel / Sequence Number
- Existing Fence Line
- Proposed Woven Wire Fence
- Proposed Chain Link Fence
- Proposed Barbed Wire Fence
- Existing Wetland Boundary
- Proposed Wetland Boundary
- Existing Endangered Animal Boundary
- Existing Endangered Plant Boundary
- Existing Historic Property Boundary
- Known Contamination Area: Soil
- Potential Contamination Area: Soil
- Known Contamination Area: Water
- Potential Contamination Area: Water
- Contaminated Site: Known or Potential

BUILDINGS AND OTHER CULTURE:

- Gas Pump Vent or U/G Tank Cap
- Sign
- Well
- Small Mine
- Foundation
- Area Outline
- Cemetery
- Building
- School
- Church
- Dam

HYDROLOGY:

- Stream or Body of Water
- Hydro, Pool or Reservoir
- Jurisdictional Stream
- Buffer Zone 1
- Buffer Zone 2
- Flow Arrow
- Disappearing Stream
- Spring
- Wetland
- Proposed Lateral, Tail, Head Ditch
- False Sump

RAILROADS:

- Standard Gauge
- RR Signal Milepost
- Switch
- RR Abandoned
- RR Dismantled

RIGHT OF WAY & PROJECT CONTROL:

- Primary Horiz Control Point
- Primary Horiz and Vert Control Point
- Secondary Horiz and Vert Control Point
- Vertical Benchmark
- Existing Right of Way Monument
- Proposed Right of Way Monument (Rebar and Cap)
- Proposed Right of Way Monument (Concrete)
- Existing Permanent Easement Monument
- Proposed Permanent Easement Monument (Rebar and Cap)
- Existing C/A Monument
- Proposed C/A Monument (Rebar and Cap)
- Proposed C/A Monument (Concrete)
- Existing Right of Way Line
- Proposed Right of Way Line
- Existing Control of Access Line
- Proposed Control of Access Line
- Proposed ROW and CA Line
- Existing Easement Line
- Proposed Temporary Construction Easement
- Proposed Temporary Drainage Easement
- Proposed Permanent Drainage Easement
- Proposed Permanent Drainage/Utility Easement
- Proposed Permanent Utility Easement
- Proposed Temporary Utility Easement
- Proposed Aerial Utility Easement

ROADS AND RELATED FEATURES:

- Existing Edge of Pavement
- Existing Curb
- Proposed Slope Stakes Cut
- Proposed Slope Stakes Fill
- Proposed Curb Ramp
- Existing Metal Guardrail
- Proposed Guardrail
- Existing Cable Guiderail
- Proposed Cable Guiderail
- Equality Symbol
- Pavement Removal

VEGETATION:

- Single Tree
- Single Shrub
- Hedge
- Woods Line
- Orchard
- Vineyard

EXISTING STRUCTURES:

MAJOR:

- Bridge, Tunnel or Box Culvert
- Bridge Wing Wall, Head Wall and End Wall

MINOR:

- Head and End Wall
- Pipe Culvert
- Footbridge
- Drainage Box: Catch Basin, DI or JB
- Paved Ditch Gutter
- Storm Sewer Manhole
- Storm Sewer

UTILITIES:

** SUE - Subsurface Utility Engineering*
LOS - Level of Service - A,B,C or D (Accuracy)

POWER:

- Existing Power Pole
- Proposed Power Pole
- Existing Joint Use Pole
- Proposed Joint Use Pole
- Power Manhole
- Power Line Tower
- Power Transformer
- U/G Power Cable Hand Hole
- H-Frame Pole
- U/G Power Line Test Hole (SUE - LOS A)*
- U/G Power Line (SUE - LOS B)*
- U/G Power Line (SUE - LOS C)*
- U/G Power Line (SUE - LOS D)*

TELEPHONE:

- Existing Telephone Pole
- Proposed Telephone Pole
- Telephone Manhole
- Telephone Pedestal
- Telephone Cell Tower
- U/G Telephone Cable Hand Hole
- U/G Telephone Test Hole (SUE - LOS A)*
- U/G Telephone Cable (SUE - LOS B)*
- U/G Telephone Cable (SUE - LOS C)*
- U/G Telephone Cable (SUE - LOS D)*
- U/G Telephone Conduit (SUE - LOS B)*
- U/G Telephone Conduit (SUE - LOS C)*
- U/G Telephone Conduit (SUE - LOS D)*
- U/G Fiber Optics Cable (SUE - LOS B)*
- U/G Fiber Optics Cable (SUE - LOS C)*
- U/G Fiber Optics Cable (SUE - LOS D)*

WATER:

- Water Manhole
- Water Meter
- Water Valve
- Water Hydrant
- U/G Water Line Test Hole (SUE - LOS A)*
- U/G Water Line (SUE - LOS B)*
- U/G Water Line (SUE - LOS C)*
- U/G Water Line (SUE - LOS D)*
- Above Ground Water Line

TV:

- TV Pedestal
- TV Tower
- U/G TV Cable Hand Hole
- U/G TV Test Hole (SUE - LOS A)*
- U/G TV Cable (SUE - LOS B)*
- U/G TV Cable (SUE - LOS C)*
- U/G TV Cable (SUE - LOS D)*
- U/G Fiber Optic Cable (SUE - LOS B)*
- U/G Fiber Optic Cable (SUE - LOS C)*
- U/G Fiber Optic Cable (SUE - LOS D)*

GAS:

- Gas Valve
- Gas Meter
- U/G Gas Line Test Hole (SUE - LOS A)*
- U/G Gas Line (SUE - LOS B)*
- U/G Gas Line (SUE - LOS C)*
- U/G Gas Line (SUE - LOS D)*
- Above Ground Gas Line

SANITARY SEWER:

- Sanitary Sewer Manhole
- Sanitary Sewer Cleanout
- U/G Sanitary Sewer Line
- Above Ground Sanitary Sewer
- SS Force Main Line Test Hole (SUE - LOS A)*
- SS Force Main Line (SUE - LOS B)*
- SS Force Main Line (SUE - LOS C)*
- SS Force Main Line (SUE - LOS D)*

MISCELLANEOUS:

- Utility Pole
- Utility Pole with Base
- Utility Located Object
- Utility Traffic Signal Box
- Utility Unknown U/G Line (SUE - LOS B)*
- U/G Tank; Water, Gas, Oil
- Underground Storage Tank, Approx. Loc.
- A/G Tank; Water, Gas, Oil
- Geoenvironmental Boring
- Abandoned According to Utility Records — AATUR
- End of Information — E.O.I.

Docusign Envelope ID: 662A03FC-75BC-8F89-8397-F2E79272B793

11/14/23

FINAL PAVEMENT SCHEDULE	
C1	PROP. APPROX. 3″ ASPHALT CONCRETE SURFACE COURSE, TYPE S9.5B, AT AN AVERAGE RATE OF 165 LBS. PER SQ. YD. IN EACH OF TWO LAYERS.
E1	PROP. APPROX. 4″ ASPHALT CONCRETE BASE COURSE, TYPE B25.0C, AT AN AVERAGE RATE OF 456 LBS. PER SQ. YD.
J	6″ AGGREGATE BASE COURSE
R	SHOULDER BERM GUTTER
T	EARTH MATERIAL.

NOTE: PAVEMENT EDGE SLOPES ARE 1:1 UNLESS SHOWN OTHERWISE

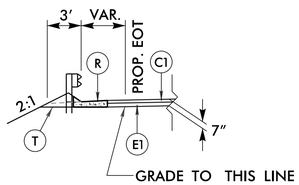

SHOULDER BERM GUTTER DETAIL

(USE IN CONJUCTION WITH TYP. NO. 1)

–L– STA. 14+24 TO –L– STA. 14+37 RT

–L– SR 1644 (MCNEIL RD.)

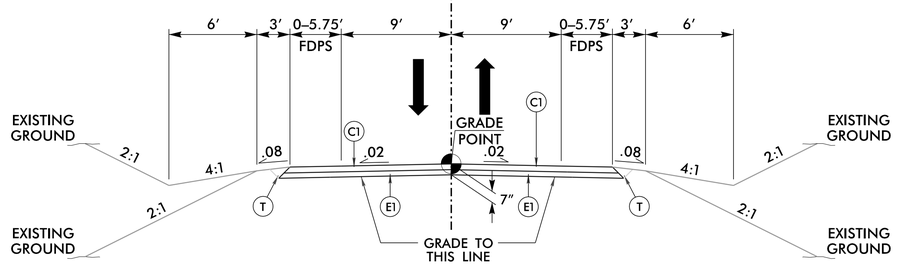

TYPICAL SECTION NO. 1

–L– STA. 12+05.00 TO –L– STA. 13+00.81
–L– STA. 14+13.19 TO –L– STA. 15+41.00

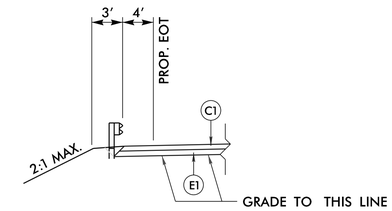

GUARDRAIL SHOULDER DETAIL

SEE PLAN FOR LOCATIONS

–DR1–

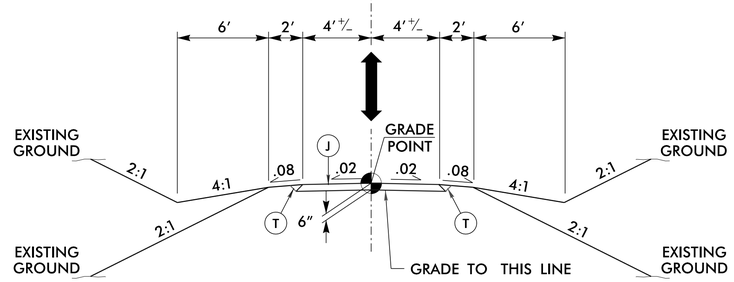

TYPICAL SECTION NO. 2

–DR1– STA. 20+00.00 TO –DR1– STA. 20+22.17

–DR2–

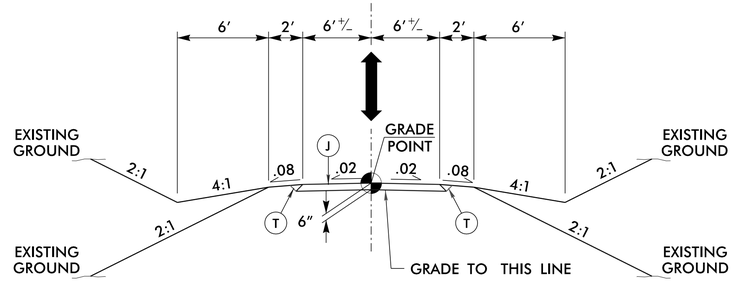

TYPICAL SECTION NO. 3

–DR2– STA. 30+00.00 TO –DR2– STA. 30+34.23

–L– SR 1644 (MCNEIL RD.)

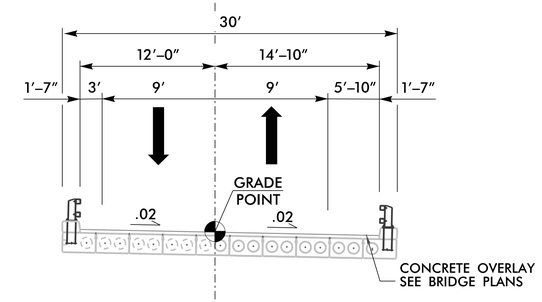

TYPICAL SECTION NO. 4

–L– STA. 13+00.81 TO –L– STA. 14+13.19

HB-0044

2A-1

NORTH CAROLINA
DEPARTMENT OF TRANSPORTATION
ASHE COUNTY

ROADWAY DESIGN UNIT

ROADWAY DESIGN ENGINEER

NORTH CAROLINA PROFESSIONAL SEAL 043023 ENGINEER DAVID V. JANOSKO

DocuSigned by: David Janosko 7/17/2026

PAVEMENT DESIGN ENGINEER

NORTH CAROLINA PROFESSIONAL SEAL 049851 ENGINEER RAMIE A. SHAHIN

DocuSigned by: Ramie Shahin 7/22/2026

PREPARED BY

ms consultants, inc.
5444 Wade Park Blvd.
Suite 160
Raleigh, NC 27607
NC License Number : C-3230

DOCUMENT NOT CONSIDERED FINAL UNLESS ALL SIGNATURES COMPLETED

REVISIONS

Docusign Envelope ID: D0A3383B-23F8-8CCF-8264-647414B17419

PROJECT REFERENCE NO.	SHEET NO.
HB-0044	2C-1

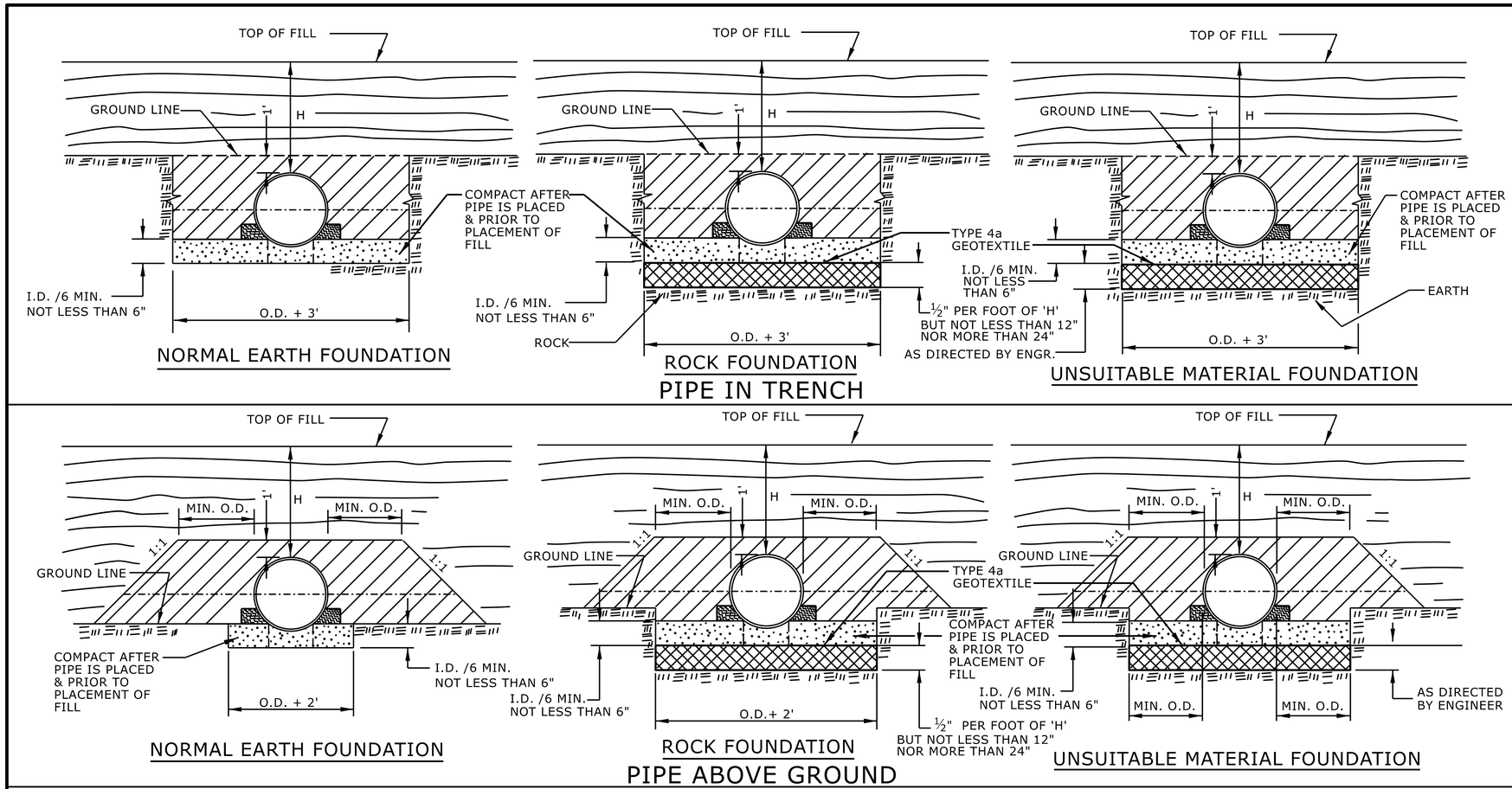

GENERAL NOTES:

I.D. = THE MAXIMUM HORIZONTAL INSIDE DIAMETER DIMENSION.

O.D. = THE MAXIMUM HORIZONTAL OUTSIDE DIAMETER DIMENSION.

H = THE FILL HEIGHT MEASURED VERTICALLY AT ANY POINT ALONG THE PIPE FROM THE TOP OF THE PIPE TO THE TOP OF THE EMBANKMENT AT THAT POINT.

APPROVED SUITABLE LOCAL MATERIAL.

TAKE CARE TO FULLY COMPACT HAUNCH ZONE OF PIPE BACKFILL.

LOOSELY PLACED SELECT MATERIAL CLASS III OR CLASS II, TYPE 1 FOR PIPE BEDDING. LEAVE SECTION DIRECTLY BENEATH PIPE UNCOMPACTED AS PIPE SEATING AND BACKFILL WILL ACCOMPLISH COMPACTION.

DO NOT OPERATE HEAVY EQUIPMENT OVER ANY PIPE CULVERT UNTIL THE PIPE CULVERT HAS BEEN PROPERLY BACKFILLED AND COVERED WITH AT LEAST 3 FEET OF APPROVED MATERIAL.

REFER TO NCDOT PIPE MATERIAL SELECTION GUIDE AND STANDARD SPECIFICATIONS FOR ALLOWABLE PIPE FILL HEIGHTS AND PIPE SPECIFICATIONS.

SPRINGLINE OF PIPE

SELECT BACKFILL MATERIAL CLASS III OR CLASS II, TYPE 1 ABOVE AND BELOW SPRINGLINE.

UNDISTURBED EARTH MATERIAL

SELECT MATERIAL CLASS V OR VI FOR FOUNDATION CONDITIONING. ENCAPSULATE WITH TYPE IV GEOTEXTILE AS DIRECTED BY THE ENGINEER.

STATE OF NORTH CAROLINA
DEPT. OF TRANSPORTATION
DIVISION OF HIGHWAYS
RALEIGH, N.C.

ROADWAY DETAIL DRAWING FOR

METHOD OF PIPE INSTALLATION

FLEXIBLE PIPE

NORTH CAROLINA PROFESSIONAL SEAL 033144 ENGINEER NICOLE M. HACKLER

Signed by: Nicole M Hackler
5884323D34164C5...

SHEET 1 OF 2

300.01

DOCUMENT NOT CONSIDERED FINAL UNLESS ALL SIGNATURES COMPLETED

CONTRACTS STANDARDS AND DEVELOPMENT UNIT
Office 919-707-6950 FAX 919-250-4119

SEE TITLE BLOCK

ORIGINAL BY:	S.CALHOUN	DATE:	7-25-2024
MODIFIED BY:		DATE:	
CHECKED BY:		DATE:	
FILE SPEC.:			

Docusign Envelope ID: D0A3383B-23F8-8CCF-8264-647414B17419

PROJECT REFERENCE NO.	SHEET NO.
HB-0044	2C-2

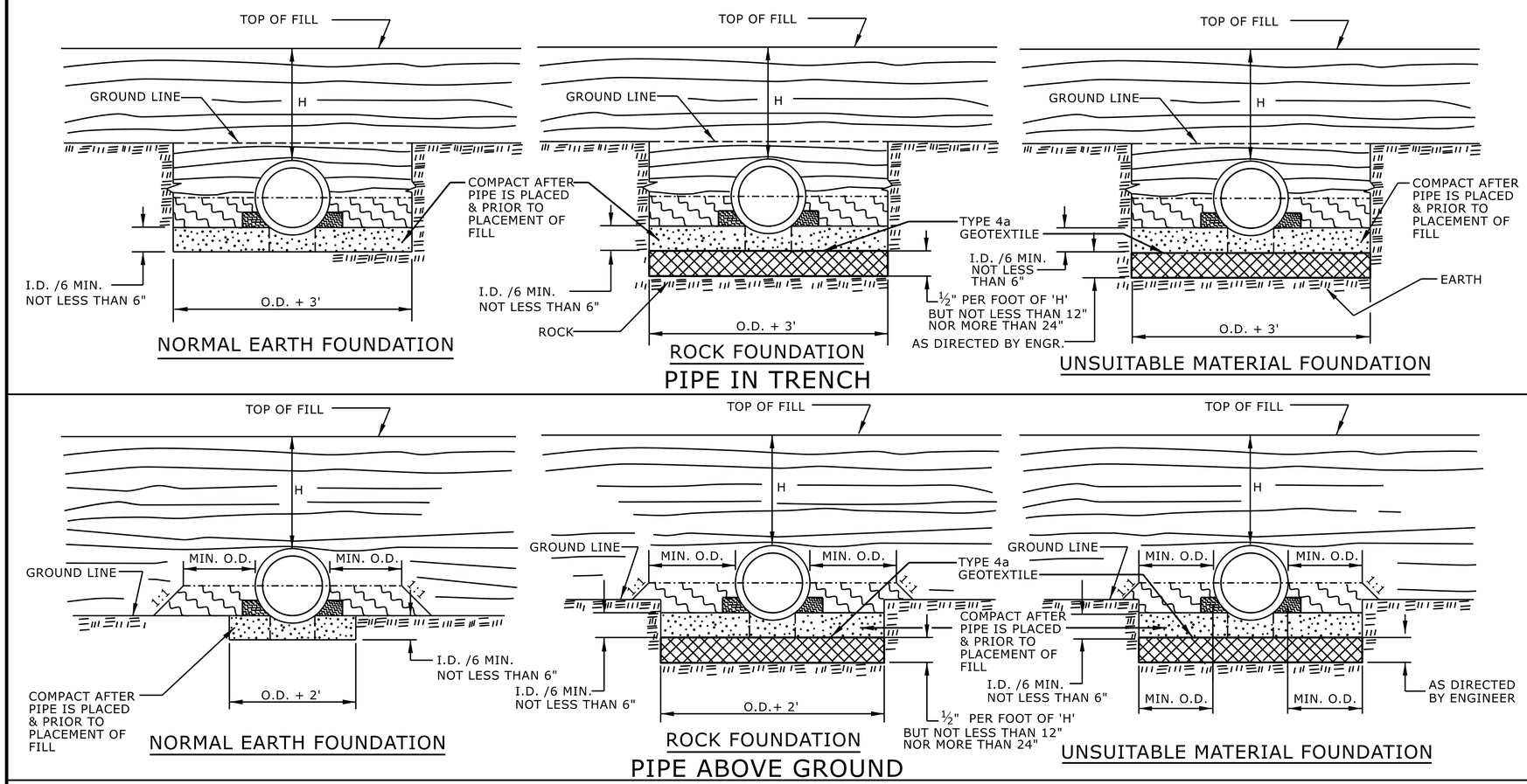

GENERAL NOTES:

I.D. = THE MAXIMUM HORIZONTAL INSIDE DIAMETER DIMENSION.

O.D. = THE MAXIMUM HORIZONTAL OUTSIDE DIAMETER DIMENSION.

H = THE FILL HEIGHT MEASURED VERTICALLY AT ANY POINT ALONG THE PIPE FROM THE TOP OF THE PIPE TO THE TOP OF THE EMBANKMENT AT THAT POINT.

APPROVED SUITABLE LOCAL MATERIAL.

TAKE CARE TO FULLY COMPACT HAUNCH ZONE OF PIPE BACKFILL.

LOOSELY PLACED SELECT MATERIAL CLASS III OR CLASS II, TYPE 1 FOR PIPE BEDDING. LEAVE SECTION DIRECTLY BENEATH PIPE UNCOMPACTED AS PIPE SEATING AND BACKFILL WILL ACCOMPLISH COMPACTION.

DO NOT OPERATE HEAVY EQUIPMENT OVER ANY PIPE CULVERT UNTIL THE PIPE CULVERT HAS BEEN PROPERLY BACKFILLED AND COVERED WITH AT LEAST 3 FEET OF APPROVED MATERIAL.

REFER TO NCDOT PIPE MATERIAL SELECTION GUIDE AND STANDARD SPECIFICATIONS FOR ALLOWABLE PIPE FILL HEIGHTS AND PIPE SPECIFICATIONS.

SPRINGLINE OF PIPE

SELECT BACKFILL MATERIAL CLASS III OR CLASS II, BELOW SPRINGLINE.

UNDISTURBED EARTH MATERIAL

SELECT MATERIAL CLASS V OR VI FOR FOUNDATION CONDITIONING. ENCAPSULATE WITH TYPE IV GEOTEXTILE AS DIRECTED BY THE ENGINEER.

STATE OF NORTH CAROLINA
DEPT. OF TRANSPORTATION
DIVISION OF HIGHWAYS
RALEIGH, N.C.

ROADWAY DETAIL DRAWING FOR

METHOD OF PIPE INSTALLATION

RIGID PIPE

NORTH CAROLINA PROFESSIONAL SEAL 033144 ENGINEER NICOLE M. HACKLER

Signed by: Nicole M Hackler
5884323D34164C5...

SHEET 2 OF 2

300.01

DOCUMENT NOT CONSIDERED FINAL UNLESS ALL SIGNATURES COMPLETED

CONTRACTS STANDARDS AND DEVELOPMENT UNIT
Office 919-707-6950 FAX 919-250-4119

SEE TITLE BLOCK

ORIGINAL BY: S.CALHOUN DATE: 7-25-2024
MODIFIED BY: DATE:
CHECKED BY: DATE:
FILE SPEC.:

Docusign Envelope ID: D0A3383B-23F8-8CCF-8264-647414B17419

PROJECT REFERENCE NO.	SHEET NO.
HB-0044	2C-3

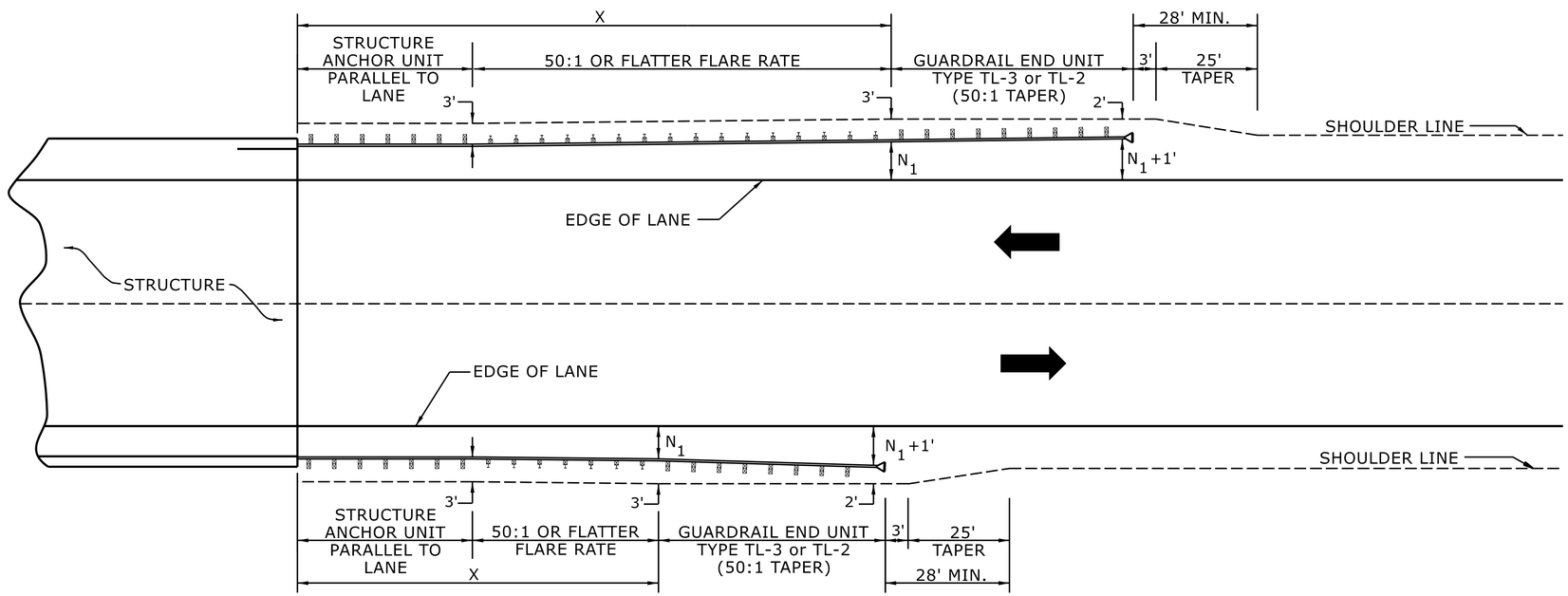

USE FLARE RATE AS THE CONTROL IF THE "N_1" DISTANCE IS NOT OBTAINED.
("N_1" IS BASED ON SHOULDER WIDTHS IN THE ROADWAY DESIGN MANUAL)

SEE STD. 862.03 FOR STRUCTURE ANCHOR UNITS

FOR POSTED SPEEDS ≥ 45MPH USE GREU TYPE TL-3
FOR POSTED SPEEDS < 45MPH USE GREU TYPE TL-2

GUARDRAIL LENGTH OF NEED (X) IS CALCULATED BASED ON THE AASHTO ROADSIDE DESIGN GUIDE.

LENGTHS AND OFFSETS FOR PROPOSED GUARDRAIL AT TWO LANE - TWO WAY LOCATIONS

STATE OF
NORTH CAROLINA
DEPT. OF TRANSPORTATION
DIVISION OF HIGHWAYS
RALEIGH, N.C.

ROADWAY DETAIL DRAWING FOR
GUARDRAIL PLACEMENT

NORTH CAROLINA PROFESSIONAL SEAL 033144 ENGINEER NICOLE M. HACKLER

Signed by: Nicole M Hackler
5884323D34164C5...

SHEET 4 OF 15

862D01

DOCUMENT NOT CONSIDERED FINAL UNLESS ALL SIGNATURES COMPLETED

CONTRACTS STANDARDS AND DEVELOPMENT UNIT
Office 919-707-6950 FAX 919-250-4119

SEE TITLE BLOCK

ORIGINAL BY: S.CALHOUN DATE: 7-25-2024
MODIFIED BY: DATE:
CHECKED BY: DATE:
FILE SPEC.:

Docusign Envelope ID: D0A3383B-23F8-8CCF-8264-647414B17419

PROJECT REFERENCE NO.	SHEET NO.
HB-0044	2C-4

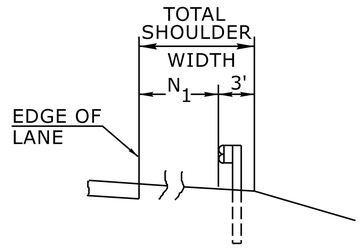

FILL SECTION

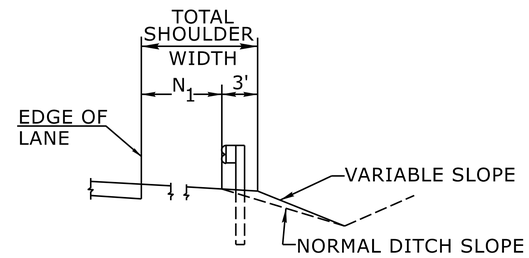

CUT SECTION

"N_1"= DISTANCE FROM EDGE OF LANE TO FACE OF GUARDRAIL WHERE GUARDRAIL IS PARALLEL TO LANE.

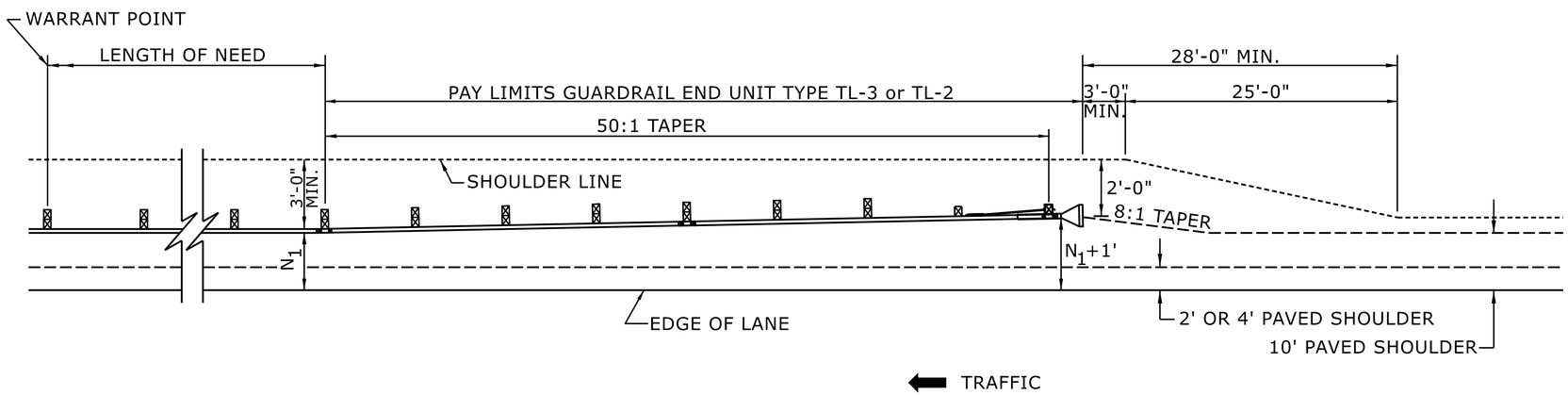

FOR POSTED SPEEDS ≥ 45mph USE GREU TYPE TL-3
FOR POSTED SPEEDS < 45mph USE GREU TYPE TL-2

DETAIL OF BEGINNING OF GUARDRAIL IN CUT OR FILL SECTION

STATE OF
NORTH CAROLINA
DEPT. OF TRANSPORTATION
DIVISION OF HIGHWAYS
RALEIGH, N.C.

ROADWAY DETAIL DRAWING FOR
GUARDRAIL PLACEMENT

SHEET 6 OF 15

862D01

NORTH CAROLINA PROFESSIONAL ENGINEER SEAL 033144 NICOLE M. HACKLER

Signed by: Nicole M Hackler
5884323D34164C9...

DOCUMENT NOT CONSIDERED FINAL
UNLESS ALL SIGNATURES COMPLETED

CONTRACTS STANDARDS AND DEVELOPMENT UNIT
Office 919-707-6950 FAX 919-250-4119

SEE TITLE BLOCK

ORIGINAL BY: S.CALHOUN DATE: 7-25-2024
MODIFIED BY: DATE:
CHECKED BY: DATE:
FILE SPEC.:

Docusign Envelope ID: DD9F6508-6E9E-80AD-8376-9406F5FAEFEF

5/14/99

PROJECT REFERENCE NO.	SHEET NO.
HB-0044	2C-5

STATE OF
NORTH CAROLINA
DEPT. OF TRANSPORTATION
DIVISION OF HIGHWAYS
RALEIGH, N.C.

ENGLISH DETAIL DRAWING FOR

TYPE III - SHOP CURVED
STRUCTURE ANCHOR UNIT

SHEET 1 OF 1

TYPE III SC

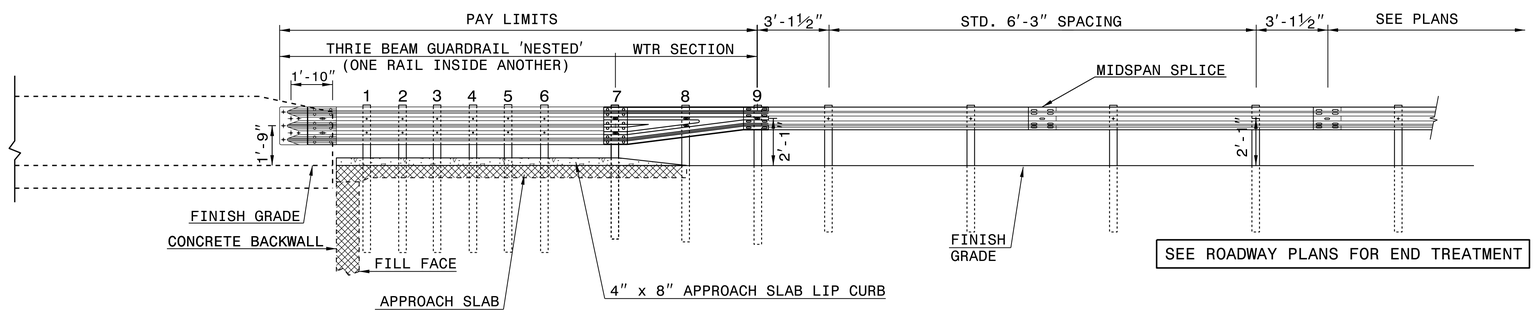

ELEVATION

NOTE:
- **POST NOT REQUIRED FOR SKEW ANGLES GREATER THAN 150° OR LESS THAN 30° UNLESS OTHERWISE DIRECTED BY THE ENGINEER.
- *THE DISTANCE FROM END OF BRIDGE RAIL TO CENTER LINE OF THE FIRST POST SHOULD BE 11½" IF CONCRETE BACKWALL IS NOT PRESENT.
- -SHOULDER BERM GUTTER MUST BE INSTALLED TO THE LIMITS 8" x 4" LIP CURB IS SHOWN IF ANCHOR UNIT IS NOT ADJACENT TO AN APPROACH SLAB.
- -MEASURE GUARDRAIL HEIGHT FROM THE TOP OF ADJACENT SURFACE (SHOULDER, BERM, OR GUTTER).
- -USE NO STEEL POSTS WITHIN THE GUARDRAIL ANCHOR UNIT LIMITS.
- -LAP JOINTS IN THE DIRECTION OF TRAFFIC FLOW.
- -SEE STANDARD 862.03 SHEET 4 FOR POST SECTIONS 1 THRU 9.

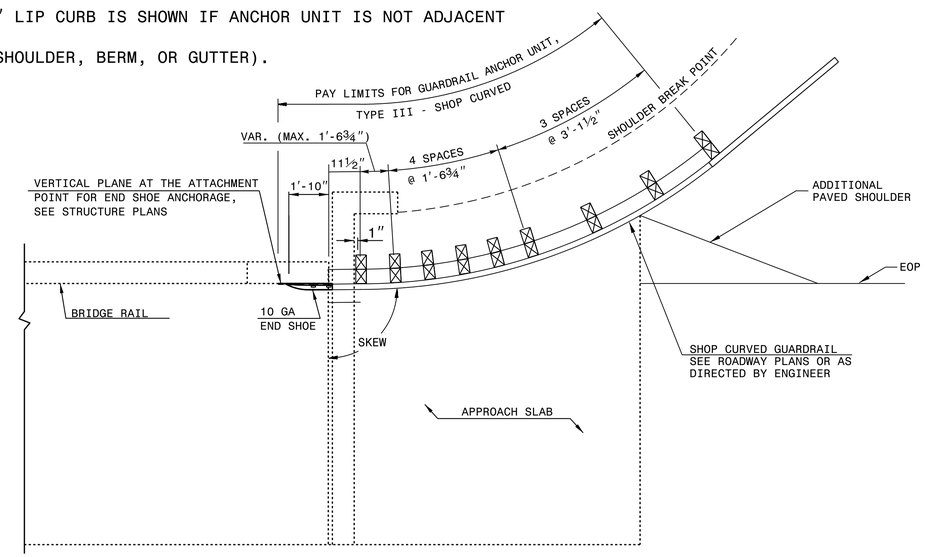

PLAN VIEW

GUARDRAIL ANCHOR UNIT, TYPE III - SHOP CURVED FOR ATTACHMENT TO RAIL ON BRIDGE

STATE OF
NORTH CAROLINA
DEPT. OF TRANSPORTATION
DIVISION OF HIGHWAYS
RALEIGH, N.C.

ENGLISH DETAIL DRAWING FOR

TYPE III - SHOP CURVED
STRUCTURE ANCHOR UNIT

SHEET 1 OF 1

TYPE III SC

01-FEB-2018 09:19
S:\Contracts\Contracts\Special Details\jhowerton\Guardrail\31 inch Guardrail\type.iii.sc.dgn
jhowerton AT CSD-232595

DOCUMENT NOT CONSIDERED FINAL
UNLESS ALL SIGNATURES COMPLETED

NORTH CAROLINA PROFESSIONAL SEAL 33144 ENGINEER NICOLE M. HACKLER

Signed by:
Nicole M Hackler
5884323D34164C5...

CONTRACT STANDARDS
AND DEVELOPMENT UNIT
Office 919-707-6950 FAX 919-250-4119

SEE PLATE FOR TITLE

ORIGINAL BY: E.E.Ward DATE: 4-4-02
MODIFIED BY: T.S.Spell DATE: 2-01-18
CHECKED BY: DATE:
FILE SPEC.: \jhowerton\guardrail\31inguardrail\typeiiisc.dgn

11/14/23

SUMMARY OF EARTHWORK
VOLUME IN CUBIC YARDS

STATION	STATION	UNCL. EXCAV.	EMBANK. +15%	BORROW	WASTE
–L– 12+05.00	–L– 13+00.81	228	30		198
	(BEGIN BRIDGE)				
–DR1– 20+00.00	–DR1– 20+40.02	71	0		71
SUBTOTAL:		299	30		269
–L– 14+13.19	–L– 15+41.00	326	47		279
(END BRIDGE)					
–DR2– 30+00.00	–DR2– 30+47.24	10	32	22	
SUBTOTAL:		336	79	22	279
SUBTOTALS:		635	109	22	548
MATERIAL FOR SHOULDER CONSTRUCTION					
LOSS DUE TO CLEARING & GRUBBING					
ADDITIONAL UNDERCUT					
WASTE IN LIEU OF BORROW				–22	–22
PROJECT TOTALS:		635	109	0	526
EST. 5% TO REPLACE TOP SOIL ON BORROW PIT					
GRAND TOTALS:		635	109	0	526
SAY:		700			

EST. DDE = 63 CY
EST. UNDERCUT = 225 CY
EST. SELECT GRANULAR MATERIAL = 200 CY
EST. GEOTEXTILE FOR SOIL STABILIZATION = 200 SY
EST. INCIDENTAL STONE BASE = 50 TONS

Earthwork quantities are calculated by the roadway designer. These earthwork quantities are based in part on subsurface data provided by the Geotechnical Engineering Unit.

Approximate quantities only. Unclassified Excavation, Shoulder Borrow, Fine Grading, and Clearing and Grubbing will be paid for at the contract lump sum price for "Grading."

SHOULDER BERM GUTTER SUMMARY

SURVEY LINE	STATION	STATION	LENGTH
–L–	14+24	14+37	13
		TOTAL:	13
		SAY:	15

"N" = DISTANCE FROM EDGE OF LANE TO FACE OF GUARDRAIL.
TOTAL SHOULDER WIDTH = DISTANCE FROM EDGE OF TRAVEL LANE TO SHOULDER BREAK POINT.
FLARE LENGTH = DISTANCE FROM LAST SECTION OF PARALLEL GUARDRAIL TO END OF GUARDRAIL.
W = TOTAL WIDTH OF FLARE FROM BEGINNING OF TAPER TO END OF GUARDRAIL.
G = GATING IMPACT ATTENUATOR TYPE 350
NG = NON-GATING IMPACT ATTENUATOR TYPE 350

GUARDRAIL SUMMARY

SURVEY LINE	BEG. STA.	END STA.	LOCATION	LENGTH			WARRANT POINT		"N" DIST. FROM E.O.L.	TOTAL SHOULDER WIDTH	FLARE LENGTH		W		ANCHORS									IMPACT ATTENUATOR TYPE 350			REMOVE EXISTING GUARDRAIL	REMOVE AND RESET EXISTING GUARDRAIL	REMARKS
				STRAIGHT	SHOP CURVED	DOUBLE FACE	APPROACH END	TRAILING END			APPROACH END	TRAILING END	APPROACH END	TRAILING END	GREU TL–2	TYPE III	CAT–1	TEMP. GREU TL–2	AT–1	IMPACT ATTN 350	TYPE III SHOP CURVED			EA	G	NG			
–L–	12+28	13+03	LT	25.00	31.25		13+03	13+03	5	7		25	0.5	0.5	1						1								
–L–	13+03	13+03	RT	18.75	18.75		13+03	13+03	6	6	25		0.5	0.5					1		1								
–L–	14+13	14+43	LT	25.00	25.00		13+03	13+03	5	7	25		0.5	0.5		1			1										
–L–	14+13	15+15	RT	25.00	43.75		13+03	13+03	5	7		25	0.5	0.5	1						1								
		SUBTOTAL		93.75	118.75										2	1			2		3								
		ANCHOR DEDUCTIONS																											
		GREU TL–2	2 @ 25	–50.00																									
		TYPE III	4 @ 18.75	–18.75	–56.25																								
		AT–1	2 @ 6.25	–12.5																									
		PROJECT TOTAL		12.5	62.50										2	1			2		3								
		SAY		25	75										2	1			2		3								
			EXTRA GUARDRAIL POSTS = 5 EA																										

HB-0044

3B-1

NORTH CAROLINA
DEPARTMENT OF TRANSPORTATION
ASHE COUNTY

ROADWAY DESIGN UNIT

PREPARED BY

ms consultants, inc.
5444 Wade Park Blvd.
Suite 160
Raleigh, NC 27607
NC License Number : C-3299

REVISIONS

LINDA102024

COMPUTED BY:	Linda Johns, PE	DATE:	5-22-25
CHECKED BY:	W. Herbert Turner, Jr., PE	DATE:	5-22-25

NORTH CAROLINA DEPARTMENT OF TRANSPORTATION
DIVISION OF HIGHWAYS

PROJECT NO.	SHEET NO.
HB-0044	3D-1

Note: Invert Elevations indicated are for Bid Purposes only and shall not be used for project construction stakeout. See "Standard Specifications For Roads and Structures, Section 300-5".

LIST OF PIPES, ENDWALLS, ETC. (FOR PIPES 48 INCHES & UNDER)

LINE & STATION / SIZE / THICKNESS OR GAUGE	OFFSET	STRUCTURE NUMBER FROM	STRUCTURE NUMBER TO	TOP ELEVATION FT.	INVERT ELEVATION FT.	INVERT ELEVATION FT.	MINIMUM REQUIRED SLOPE %	Drainage Pipe (RCP, CSP, HDPE, PVC, or PP PIPE) 15	18	24	30	36	42	48		DO NOT USE RCP	DO NOT USE CSP	DO NOT USE HDPE	DO NOT USE PVC	DO NOT USE PP PIPE
L 12+71	0 CL	0403	0404		2629.6	2628.8														
L 14+32	12' Rt.	0407		2631.8																
L 14+32	0 CL	0407	0408		2628.6	2628.4														
DR2 30+30	0 CL	0405	0406		2629.3	2628.4														
SHEET TOTALS																				
PROJECT TOTALS																				

STRUCTURE NUMBER FROM	C. S. PIPE 15	18	24	30	36	42	48		R. C. PIPE CLASS III 15	18	24	30	36	42	48		R. C. PIPE CLASS IV 15	18	24	30	36	42	48		R. C. PIPE CLASS V 15	18	24	30	36	42	48	
	.064	.064	.064	.079	.079	.109	.109																										
L 12+71																		56															
L 14+32																																	
L 14+32																	40																
DR2 30+30																																	
SHEET TOTALS																	40	56															
PROJECT TOTALS																	40	56															

STRUCTURE NUMBER FROM	15" SIDE DRAIN PIPE	18" SIDE DRAIN PIPE	ENDWALLS STD. 826.01 OR 826.31 (UNLESS NOTED OTHERWISE) CY	REINFORCED ENDWALLS CY	DRAINAGE STRUCTURE MASONRY CY	QUANTITIES FOR DRAINAGE STRUCTURES NOTE: TOTAL LIN. FT. FOR PAY QUANTITY SHALL BE A + (1.3 X B) 0' THRU 5' EACH	A 5' THRU 10' LIN. FT.	B 10' AND ABOVE LIN. FT.	C.B. STD. 840.01 OR STD. 840.02	FRAME, GRATES, AND HOOD STD. 840.03 GRATE TYPE E	F	G	CONCRETE TRANSITIONAL SECTION D.I. STD. 852.04 OR STD. 852.06	C.B. STD. 852.05	G.D.I. (N.S. SAG) FRAME W/ GRATE STD. 840.24	G.D.I. (N.S. SAG) FRAME W/ 2 GRATES STD. 840.24	G.D.I. (N.S. FLAT) FRAME W/ GRATE STD. 840.29	G.D.I. (N.S. FLAT) FRAME W/ 2 GRATES STD. 840.29	DRIVEWAY D.I. STD. 840.30	FRAME W/ GRATE FOR DRIVEWAY STD. 840.30	J.B. STD. 840.31 OR STD. 840.32	ANGLED VANE GRATES AND FRAMES STD. 840.33	T.B.J.B. STD. 840.34	T.B.D.I. STD. 840.35	T.B.D.I. FOR STEEL GRATES STD. 840.36	TEMP STEEL PLATE COVER MASONRY DRAINAGE	15" SIDE DRAIN PIPE ELBOW	15" C.S. ELBOW	18" C.S. ELBOW		BERM DITCH OUTLET STD. 850.10 (PER EACH)	BERM DITCH OUTLET STD. 850.11 (PER EACH)		MODIFIED CONC. FLUME	PIPE REMOVAL LIN. FT.	REMARKS
L 12+71																																									
L 14+32						1															1								1												TB 2GI
L 14+32																																									
DR2 30+30	40																																								
SHEET TOTALS	40					1															1								1												
PROJECT TOTALS	40					1															1								1												

ABBREVIATIONS

C.A.A.	CORRUGATED ALUMINIUM ALLOY
C.B.	CATCH BASIN
C.S.	CORRUGATED STEEL
D.I.	DROP INLET
G.D.I.	GRATED DROP INLET
H.D.P.E.	HIGH DENSITY POLYETHYLENE
J.B.	JUNCTION BOX
M.H.	MANHOLE
N.S.	NARROW SLOT
P.V.C.	POLYVINYL CHLORIDE
R.C.	REINFORCED CONCRETE
T.B.D.I.	TRAFFIC BEARING DROP INLET
T.B.J.B.	TRAFFIC BEARING JUNCTION BOX
W.S.	WIDE SLOT

COMPUTED BY: __ CRL	9/9/2025
CHECKED BY: ___ MHS	9/9/2025

(9-17-24)

STATE OF NORTH CAROLINA
DIVISION OF HIGHWAYS

PROJECT NO.	SHEET NO.
HB-0044	3G-1

SUMMARY OF SUBSURFACE DRAINAGE

LINE	Station	Station	Location LT/RT/CL	Drain Type* UD/BD/SD	LF
CONTINGENCY				SD	100
				TOTAL LF:	100

*UD = Underdrain
*BD = Blind Drain
*SD = Subsurface Drain

Docusign Envelope ID: 0AB81138-7022-8825-8185-204EFD32BB38

11/14/23

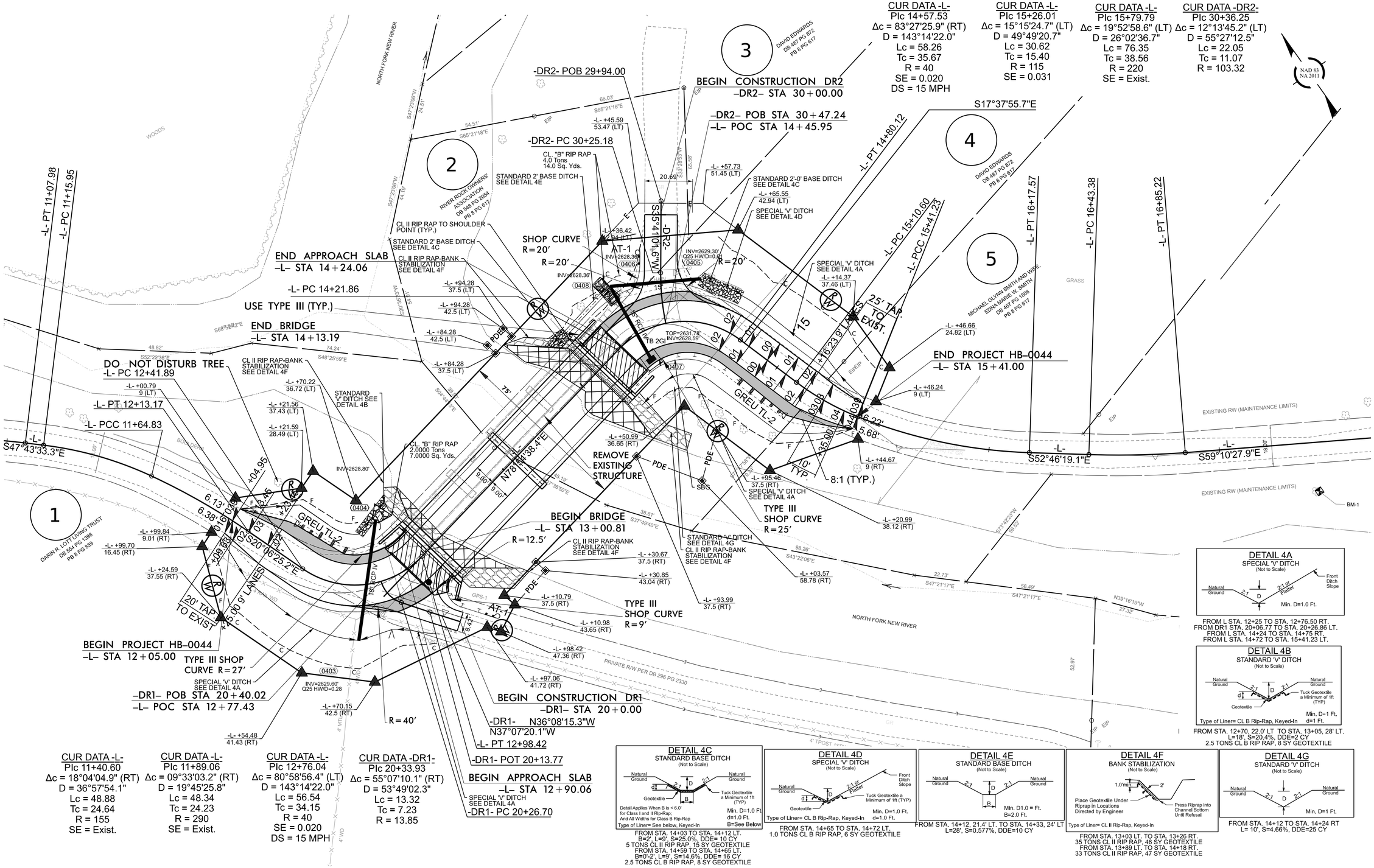

CUR DATA -L-
PIc 11+40.60
Δc = 18°04'04.9" (RT)
D = 36°57'54.1"
Lc = 48.88
Tc = 24.64
R = 155
SE = Exist.

CUR DATA -L-
PIc 11+89.06
Δc = 09°33'03.2" (RT)
D = 19°45'25.8"
Lc = 48.34
Tc = 24.23
R = 290
SE = Exist.

CUR DATA -L-
PIc 12+76.04
Δc = 80°58'56.4" (LT)
D = 143°14'22.0"
Lc = 56.54
Tc = 34.15
R = 40
SE = 0.020
DS = 15 MPH

CUR DATA -DR1-
PIc 20+33.93
Δc = 55°07'10.1" (RT)
D = 53°49'02.3"
Lc = 13.32
Tc = 7.23
R = 13.85

DETAIL 4A
SPECIAL 'V' DITCH
(Not to Scale)
Natural Ground
Front Ditch Slope
2:1 or Flatter
Min. D=1.0 Ft.
FROM L STA. 12+25 TO STA. 12+76.50 RT.
FROM DR1 STA. 20+06.77 TO STA. 20+26.86 LT.
FROM L STA. 14+24 TO STA. 14+75 RT.
FROM L STA. 14+72 TO STA. 15+41.23 LT.

DETAIL 4B
STANDARD 'V' DITCH
(Not to Scale)
Natural Ground
Tuck Geotextile a Minimum of 1ft (TYP)
Geotextile
Min. D=1 Ft.
d=1 Ft.
Type of Liner= CL B Rip-Rap, Keyed-In
FROM STA. 12+70, 22.0' LT TO STA. 13+05, 28' LT.
L=18', S=20.4%, DDE=2 CY
2.5 TONS CL B RIP RAP, 8 SY GEOTEXTILE

DETAIL 4C
STANDARD BASE DITCH
(Not to Scale)
Natural Ground
Tuck Geotextile a Minimum of 1ft (TYP)
Geotextile
Detail Applies When B is < 6.0' for Class I and II Rip-Rap; And All Widths for Class B Rip-Rap
Min. D=1.0 Ft.
d=1.0 Ft.
B=See Below
Type of Liner= See below, Keyed-In
FROM STA. 14+03 TO STA. 14+12 LT.
B=2', L=9', S=25.0%, DDE= 10 CY
5 TONS CL II RIP RAP, 15 SY GEOTEXTILE
FROM STA. 14+59 TO STA. 14+65 LT.
B=0'-2', L=9', S=14.6%, DDE= 16 CY
2.5 TONS CL B RIP RAP, 8 SY GEOTEXTILE

DETAIL 4D
SPECIAL 'V' DITCH
(Not to Scale)
Natural Ground
Front Ditch Slope
2:1 or Flatter
Tuck Geotextile a Minimum of 1ft (TYP)
Geotextile
Min. D=1.0 Ft.
d=1.0 Ft.
Type of Liner= CL B Rip-Rap, Keyed-In
FROM STA. 14+65 TO STA. 14+72 LT.
1.0 TONS CL B RIP RAP, 6 SY GEOTEXTILE

DETAIL 4E
STANDARD BASE DITCH
(Not to Scale)
Natural Ground
Min. D1.0 = Ft.
B=2.0 Ft.
FROM STA. 14+12, 21.4' LT. TO STA. 14+33, 24' LT
L=28', S=0.577%, DDE=10 CY

DETAIL 4F
BANK STABILIZATION
(Not to Scale)
1.0'min.
2'
Place Geotextile Under Riprap in Locations Directed by Engineer
Press Riprap Into Channel Bottom Until Refusal
Type of Liner= CL II Rip-Rap, Keyed-In
FROM STA. 13+03 LT. TO STA. 13+26 RT.
35 TONS CL II RIP RAP, 46 SY GEOTEXTILE
FROM STA. 13+89 LT. TO STA. 14+18 RT.
33 TONS CL II RIP RAP, 47 SY GEOTEXTILE

DETAIL 4G
STANDARD 'V' DITCH
(Not to Scale)
Natural Ground
Min. D=1 Ft.
FROM STA. 14+12 TO STA. 14+24 RT
L= 10', S=4.66%, DDE=25 CY

SEE SHEET 5 FOR PROFILES

HB-0044
004

NORTH CAROLINA DEPARTMENT OF TRANSPORTATION
ASHE COUNTY

ROADWAY DESIGN UNIT

ROADWAY DESIGN ENGINEER
NORTH CAROLINA PROFESSIONAL SEAL 043023 ENGINEER DAVID V. JANOSKO
David Janosko 7/17/2026

HYDRAULICS ENGINEER
NORTH CAROLINA PROFESSIONAL SEAL 021162 ENGINEER W. HERBERT TURNER, JR.
Herb Turner 7/17/2026

PREPARED BY
ms consultants, inc.
5444 Wade Park Blvd.
Suite 160
Raleigh, NC 27607
NC License Number: C-3230

MI ENGINEERING
1011 SCHAUB DRIVE, SUITE 100
RALEIGH, NC 27606
(919) 851-6606
FIRM PE NUMBER: P-0671

DOCUMENT NOT CONSIDERED FINAL UNLESS ALL SIGNATURES COMPLETED

REVISIONS

Docusign Envelope ID: 0AB81138-7022-8825-8185-204EFD32BB38

11/14/23

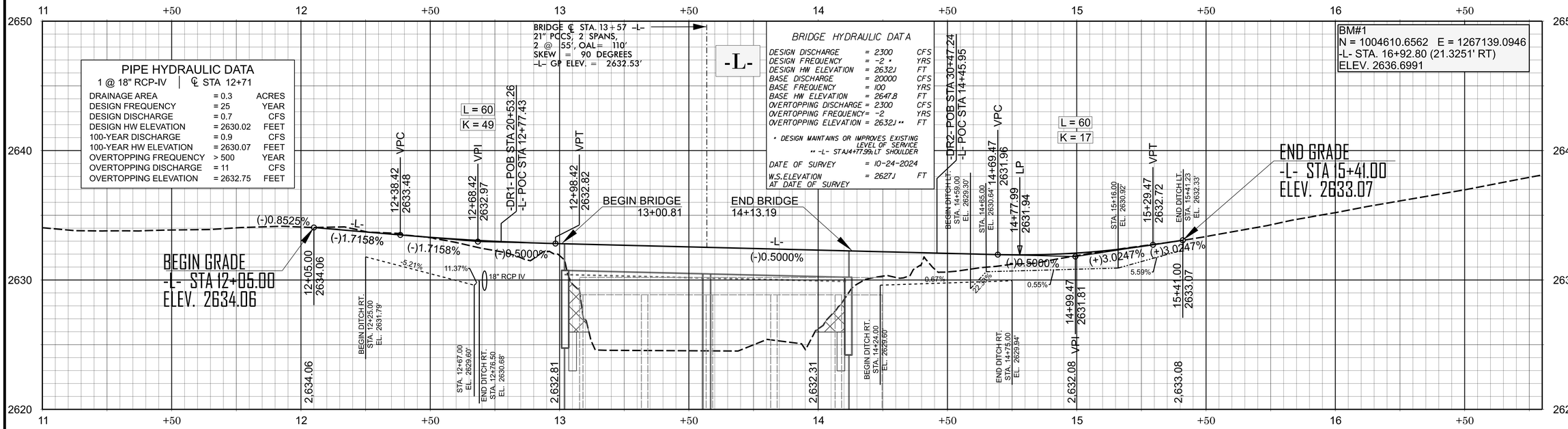

PIPE HYDRAULIC DATA

1 @ 18" RCP-IV | ℄ STA 12+71

DRAINAGE AREA	= 0.3	ACRES
DESIGN FREQUENCY	= 25	YEAR
DESIGN DISCHARGE	= 0.7	CFS
DESIGN HW ELEVATION	= 2630.02	FEET
100-YEAR DISCHARGE	= 0.9	CFS
100-YEAR HW ELEVATION	= 2630.07	FEET
OVERTOPPING FREQUENCY	> 500	YEAR
OVERTOPPING DISCHARGE	= 11	CFS
OVERTOPPING ELEVATION	= 2632.75	FEET

BRIDGE HYDRAULIC DATA

DESIGN DISCHARGE	= 2300	CFS
DESIGN FREQUENCY	= ~2 *	YRS
DESIGN HW ELEVATION	= 2632.1	FT
BASE DISCHARGE	= 20000	CFS
BASE FREQUENCY	= 100	YRS
BASE HW ELEVATION	= 2647.8	FT
OVERTOPPING DISCHARGE	= 2300	CFS
OVERTOPPING FREQUENCY	= ~2	YRS
OVERTOPPING ELEVATION	= 2632.1 **	FT

* DESIGN MAINTAINS OR IMPROVES EXISTING LEVEL OF SERVICE

** -L- STA 14+77.99, LT SHOULDER

DATE OF SURVEY	= 10-24-2024	
W.S. ELEVATION AT DATE OF SURVEY	= 2627.1	FT

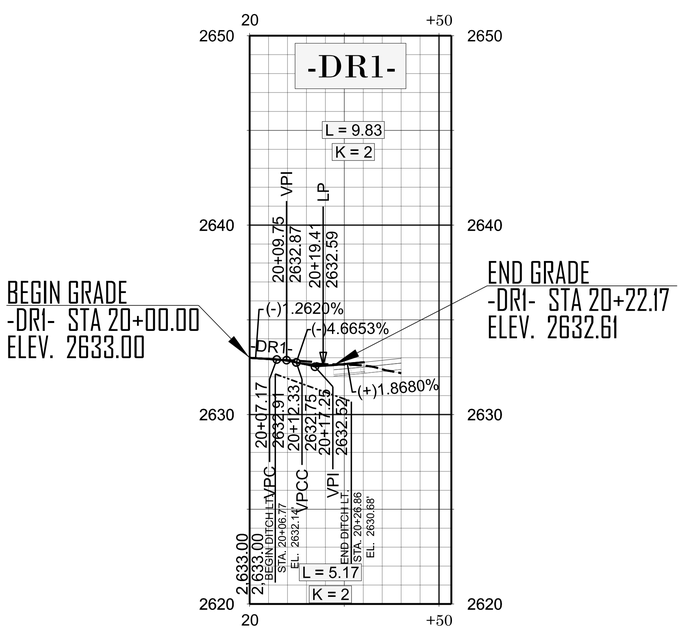

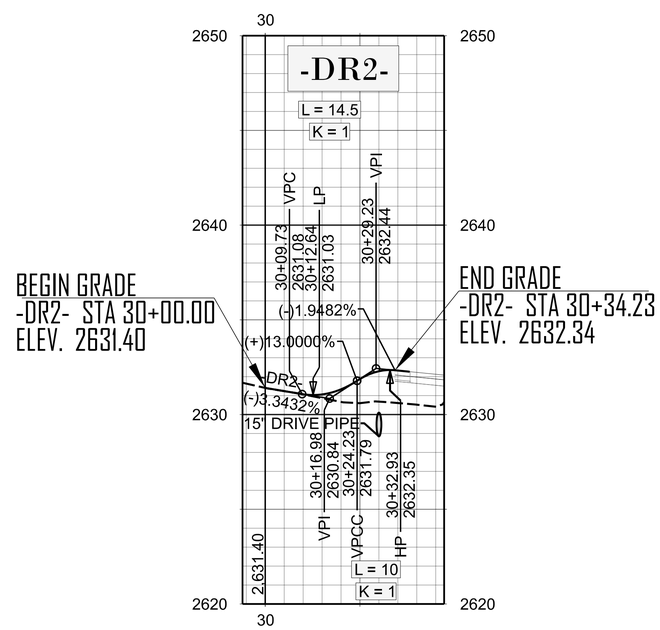

PIPE HYDRAULIC DATA

1 @ 15" | ℄ STA 30+30

DRAINAGE AREA	= 1.3	ACRES
DESIGN FREQUENCY	= 25	YEAR
DESIGN DISCHARGE	= 2.6	CFS
DESIGN HW ELEVATION	= 2630.21	FEET
100-YEAR DISCHARGE	= 3.2	CFS
100-YEAR HW ELEVATION	= 2630.33	FEET
OVERTOPPING FREQUENCY	> 500	YEAR
OVERTOPPING DISCHARGE	= 8	CFS
OVERTOPPING ELEVATION	= 2631.27	FEET

SEE SHEET 4 FOR PLAN

SEE SHEET 4 FOR PLAN

HB-0044

005

NORTH CAROLINA
DEPARTMENT OF TRANSPORTATION
ASHE COUNTY

ROADWAY DESIGN UNIT

ROADWAY DESIGN ENGINEER

NORTH CAROLINA PROFESSIONAL SEAL 043023 ENGINEER DAVID V. JANOSKO

David Janosko 7/17/2026

HYDRAULICS ENGINEER

NORTH CAROLINA PROFESSIONAL SEAL 021162 ENGINEER W. HERBERT TURNER, JR.

Herb Turner 7/17/2026

PREPARED BY

ms consultants, inc.
5444 Wade Park Blvd.
Suite 160
Raleigh, NC 27607
NC License Number: C-3230

MI ENGINEERING
1011 SCHAUB DRIVE, SUITE 100
RALEIGH, NC 27606
(919) 851-6606
FIRM PE NUMBER: P-0671

DOCUMENT NOT CONSIDERED FINAL UNLESS ALL SIGNATURES COMPLETED

REVISIONS

09/08/99

TIP PROJECT: HB-0044

STATE	STATE PROJECT REFERENCE NO.	SHEET NO.	TOTAL SHEETS
N.C.	HB-0044	RW01	6

STATE OF NORTH CAROLINA
DIVISION OF HIGHWAYS

SURVEY CONTROL, EXISTING CENTERLINES, RIGHT OF WAY, EASEMENTS AND PROPERTY TIES

ASHE COUNTY

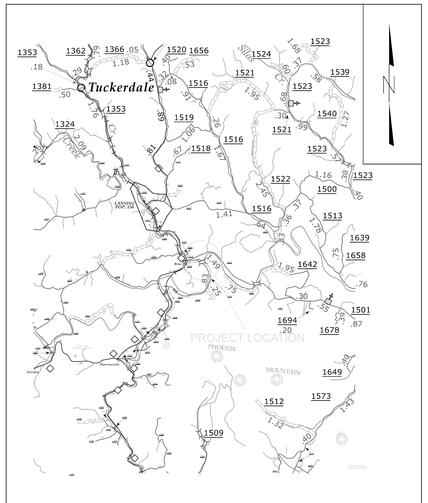

VICINITY MAP (NTS)

RW04

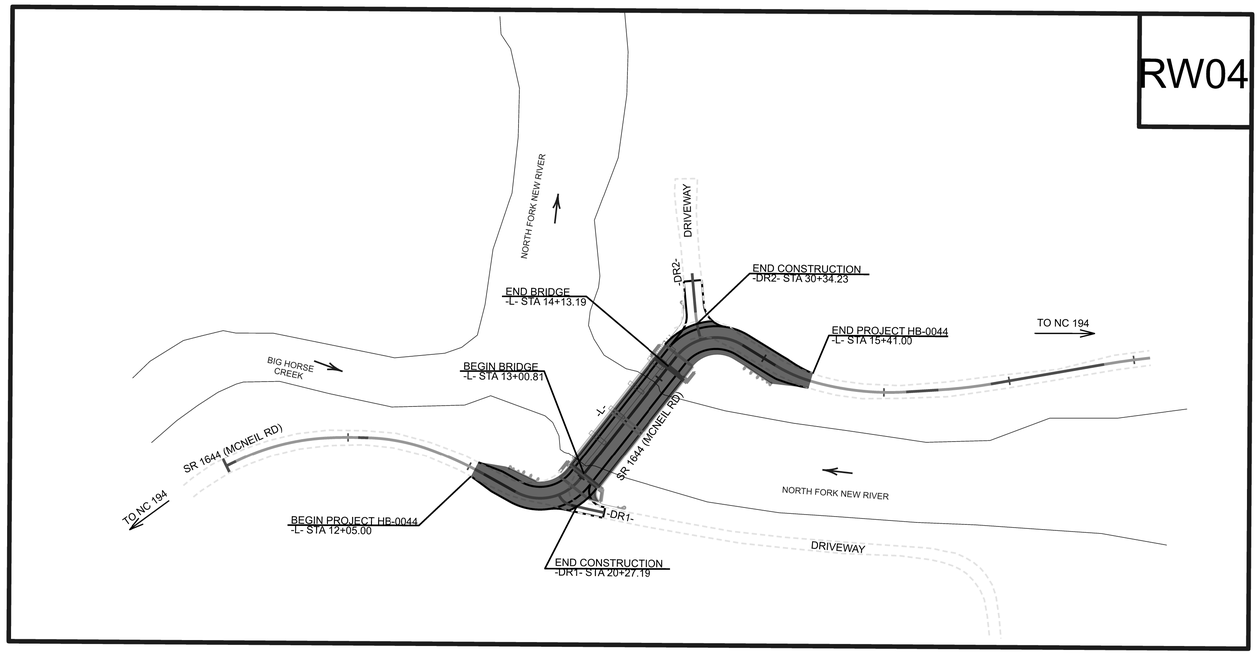

DOCUMENT NOT CONSIDERED FINAL UNLESS ALL SIGNATURES COMPLETED

GRAPHIC SCALES

60' 30' 0' 60' 120'

DATUM DESCRIPTION

THE LOCALIZED COORDINATE SYSTEM DEVELOPED FOR THIS PROJECT IS BASED ON THE STATE PLANE COORDINATES ESTABLISHED BY NCDOT FOR MONUMENT HB0044-1
WITH NAD83/2011 STATE PLANE GRID COORDINATES OF
NORTHING: 1004802.1270 EASTING: 1266801.3430
ELEVATION: 2634.5700
THE AVERAGE COMBINED GRID FACTOR USED ON THIS PROJECT (GROUND TO GRID) IS: 0.9999834031
ALL LINEAR DIMENSIONS ARE LOCALIZED HORIZONTAL DISTANCES
VERTICAL DATUM USED IS NAVD 88

Prepared in the Office of:

wsp

GEOSPHERE LAND SURVEYING OF NC
128 TALBERT ROAD
MOORESVILLE NC 28117
FIRM C-5241

2024 STANDARD SPECIFICATIONS

RIGHT OF WAY DATE: 8/15/2025

LETTING DATE: 9/17/2026

PROFESSIONAL LAND SURVEYOR

NORTH CAROLINA PROFESSIONAL SEAL L-5617 LAND SURVEYOR SARAH J. VINCENT

SIGNATURE: *DATE:* 9/16/2025

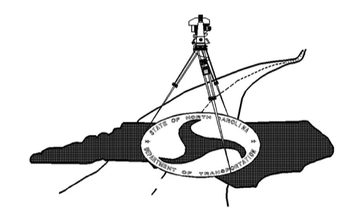

PRIMARY SURVEY CONTROL SHEET

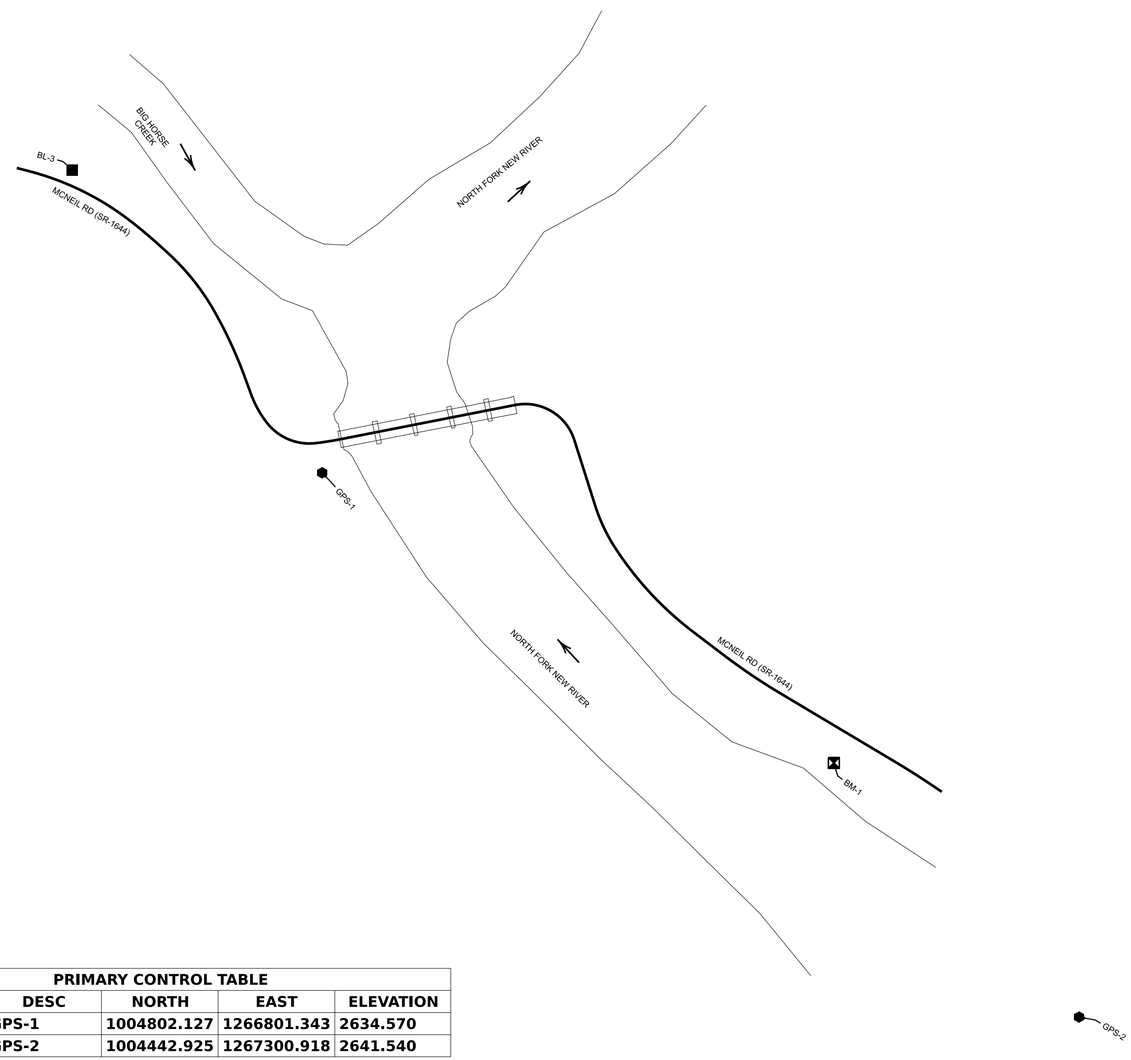

I, Christopher K, Drye, PLS, certify that the Project Control was performed by NV5 Engineers and Consultants, Inc. from an actual GPS survey performed under my supervision and the following information was used to perform the survey:

Class of survey: ***AA***
Type of GPS field procedure: RTN
Dates of survey: 12/11/2023
Datum/Epoch: NAD 83/2011
Published/Fixed-control use: N/A
Localized around: HB0044-1
Northing: 1004802.127
Easting: 1266801.343
Elevation: 2634.57'
Combined grid factor: 0.9999834031
Geoid model: GEOID 18
Units: US Survey Feet

This day 2/29/2024.

DocuSigned by:
E4E4B1C69CEC4D3...

Professional Land Surveyor L-5456

NC GRID
NAD 83 NA 2011

PRIMARY CONTROL TABLE				
POINT	DESC	NORTH	EAST	ELEVATION
1	GPS-1	1004802.127	1266801.343	2634.570
2	GPS-2	1004442.925	1267300.918	2641.540

50' 25' 0 50' 100'
1" = 50'

NOTES:

1. THE SURVEY CONTROL DATA FOR THIS PROJECT HAS BEEN COMPILED FROM VARIOUS SOURCES. IF FURTHER INFORMATION REGARDING PROJECT CONTROL IS NEEDED, PLEASE CONTACT THE LOCATION AND SURVEYS UNIT.

HB-0044
R/W 02C-1

NORTH CAROLINA DEPARTMENT OF TRANSPORTATION

PROFESSIONAL LAND SURVEYOR

NORTH CAROLINA PROFESSIONAL SEAL L-5456 LAND SURVEYOR CHRISTOPHER K. DRYE

DOCUMENT NOT CONSIDERED FINAL UNLESS ALL SIGNATURES ARE COMPLETED

2018 STANDARD SPECIFICATIONS

TIP PROJECT: HB-0044
County: Ashe

PREPARED FOR

LOCATION AND SURVEYS UNIT

PREPARED BY

PREPARED BY:
NV5
8514 MCALPINE PARK DRIVE, SUITE 135
CHARLOTTE, NC 28211
phone: 704.537.7300 NV5.com
NC License # F-1333

5/26/20

SECONDARY SURVEY CONTROL SHEET

W/ EXISTING CENTERLINE ALIGNMENTS PRIOR TO CONSTRUCTION

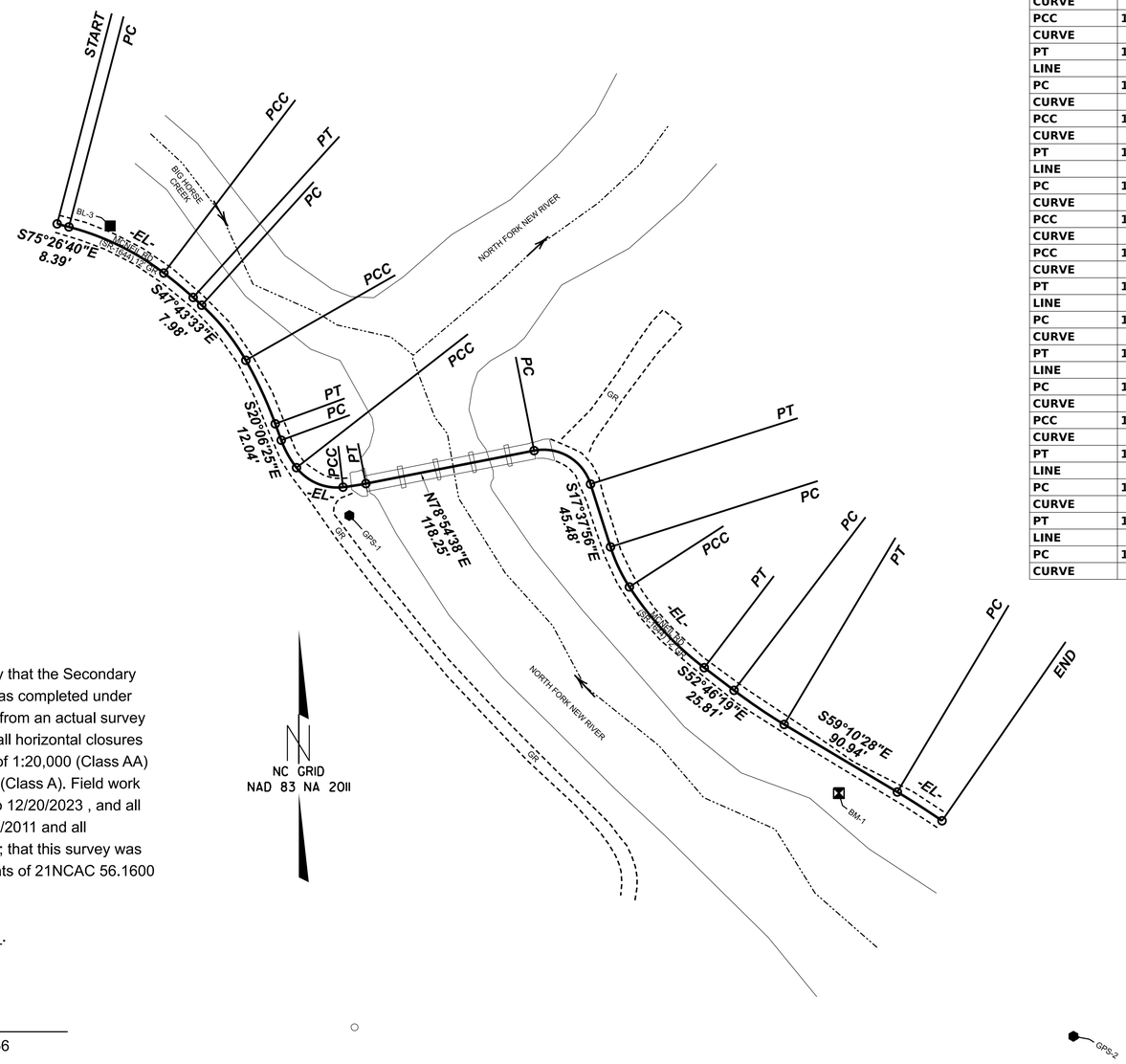

EXISTING ALIGNMENT NAME:EL									
POINT	NORTHING	EASTING	BEARING	DIST	DELTA	D	L	T	R
START	1005003.282	1266599.775							
LINE			S75°26'40""E	8.391					
PC	1005001.173	1266607.897							
CURVE					22.693°" Right	30.971°"	73.272	37.122	185
PCC	1004969.375	1266673.378							
CURVE					5.026°" Right	19.099°"	26.315	13.166	300
PT	1004952.549	1266693.6							
LINE			S47°43'33""E	7.977					
PC	1004947.183	1266699.502							
CURVE					18.068°" Right	36.965°"	48.879	24.644	155
PCC	1004909.19	1266729.932							
CURVE					9.551°" Right	19.757°"	48.341	24.227	290
PT	1004865.387	1266750.248							
LINE			S20°06'25""E	12.044					
PC	1004854.077	1266754.389							
CURVE					17.807°" Left	81.851°"	21.755	10.966	70
PCC	1004835.128	1266764.897							
CURVE					58.708°" Left	161.397°"	36.375	19.966	35.5
PCC	1004821.679	1266796.998							
CURVE					4.468°" Left	27.949°"	15.985	7.996	205
PT	1004824.139	1266812.788							
LINE			N78°54'38""E	118.253					
PC	1004846.884	1266928.833							
CURVE					83.457°" Right	168.517°"	49.524	30.323	34
PT	1004823.817	1266967.775							
LINE			S17°37'56""E	45.479					
PC	1004780.474	1266981.551							
CURVE					15.257°" Left	49.822°"	30.622	15.402	115
PCC	1004752.862	1266994.58							
CURVE					19.883°" Left	26.044°"	76.345	38.56	220
PT	1004697.153	1267046.222							
LINE			S52°46'19""E	25.807					
PC	1004681.541	1267066.77							
CURVE					5.993°" Left	14.324°"	41.84	20.939	400
PT	1004658.015	1267101.347							
LINE			S59°10'28""E	90.937					
PC	1004611.416	1267179.437							
CURVE					3.823°" Right	10.417°"	36.702	18.358	550

BASELINE POINTS TABLE				
POINT	DESC	NORTH	EAST	ELEVATION
1	GPS-1	1004802.127	1266801.343	2634.570
2	GPS-2	1004442.925	1267300.918	2641.540
3	BL-3	1005001.886	1266636.472	2635.680

BENCHMARK TABLE				
BENCHMARK	NORTHING	EASTING	ELEVATION	DESCRIPTION
BM-1	1004610.656	1267139.095	2636.773	RRSPK IN 18" WALNUT

I, Christopher K. Drye, PLS, certify that the Secondary Baseline Control for this project was completed under my direct and responsible charge from an actual survey made under my supervision; that all horizontal closures had a minimum ratio of precision of 1:20,000 (Class AA) and Vertical accuracy to 1:10,000 (Class A). Field work was performed from 12/11/2023 to 12/20/2023 , and all coordinates are based on NAD 83/2011 and all elevations are based on NAVD 88; that this survey was performed to meet the requirements of 21NCAC 56.1600 as applicable.

This day 2/29/2024.

DocuSigned by:
E4E4B1C69CEC4D3...

Professional Land Surveyor L-5456

50' 25' 0 50' 100'
1" = 50'

NOTES:

1. THE SURVEY CONTROL DATA FOR THIS PROJECT HAS BEEN COMPILED FROM VARIOUS SOURCES. IF FURTHER INFORMATION REGARDING PROJECT CONTROL IS NEEDED, PLEASE CONTACT THE LOCATION AND SURVEYS UNIT.

HB-0044
R/W 02C-1

NORTH CAROLINA DEPARTMENT OF TRANSPORTATION

PROFESSIONAL LAND SURVEYOR
NORTH CAROLINA PROFESSIONAL SEAL L-5456 LAND SURVEYOR CHRISTOPHER K. DRYE

DOCUMENT NOT CONSIDERED FINAL UNLESS ALL SIGNATURES ARE COMPLETED

2018 STANDARD SPECIFICATIONS

TIP PROJECT: HB-0044
County: Ashe

PREPARED FOR

LOCATION AND SURVEYS UNIT

PREPARED BY

PREPARED BY:
NV5
8514 MCALPINE PARK DRIVE, SUITE 135
CHARLOTTE, NC 28211
phone: 704.537.7300 NV5.com
NC License # F-1333

5/26/20

Docusign Envelope ID: D5EE95A6-6FE7-4F2A-8F0C-7F9EB94C2B41

5/26/20

PROPOSED ALIGNMENT CONTROL SHEET

I, Sarah J. Vincent, PLS, CERTIFY THAT THE DATA COMPILED CAME FROM AVAILABLE SURVEYS/MAPPING PERFORMED BY OTHERS AND PROVIDED TO ME BY NCDOT AND DO NOT CERTIFY TO THE ACCURACY OR QUALITY OF THE INDIVIDUAL DATA SOURCES.

THIS 28TH DAY OF AUGUST, 2025.

DocuSigned by:
Sarah Vincent
B60541TB8A5848A...

PROFESSIONAL LAND SURVEYOR L-5617

PROPOSED ALIGNMENT: L

POINT	STATION	NORTHING	EASTING	BEARING	DIST	DELTA	D	L	T	R	LT	ST
START	10+00.00	1005003.2819	1266599.7751	S75°26'40.1"E	8.39							
PC	10+08.39	1005001.1731	1266607.8968	S64°05'53.2"E	72.79	22°41'33.7"	30°58'14.5"	73.27	37.12	185.00		
PCC	10+81.66	1004969.3746	1266673.3778	S50°14'19.8"E	26.31	05°01'33.1"	19°05'54.9"	26.32	13.17	300.00		
PT	11+07.98	1004952.5489	1266693.6004	S47°43'33.3"E	7.98							
PC	11+15.95	1004947.1833	1266699.5025	S38°41'30.8"E	48.68	18°04'04.9"	36°57'54.1"	48.88	24.64	155.00		
PCC	11+64.83	1004909.1904	1266729.9317	S24°52'56.8"E	48.29	09°33'03.2"	19°45'25.8"	48.34	24.23	290.00		
PT	12+13.17	1004865.3872	1266750.2482	S20°06'25.2"E	28.71							
PC	12+41.89	1004838.4251	1266760.1186	S60°35'53.4"E	51.95	80°58'56.4"	143°14'22.0"	56.54	34.15	40.00		
PT	12+98.42	1004812.9229	1266805.3743	N78°54'38.4"E	123.43							
PC	14+21.86	1004836.6640	1266926.5026	S59°21'38.7"E	53.25	83°27'25.9"	143°14'22.0"	58.26	35.67	40.00		
PT	14+80.12	1004809.5270	1266972.3170	S17°37'55.7"E	30.48							
PC	15+10.60	1004780.4744	1266981.5510	S25°15'38.1"E	30.53	15°15'24.7"	49°49'20.7"	30.62	15.40	115.00		
PCC	15+41.23	1004752.8619	1266994.5801	S42°49'49.7"E	75.96	19°52'58.6"	26°02'36.7"	76.35	38.56	220.00		
PT	16+17.57	1004697.1534	1267046.2219	S52°46'19.1"E	25.81							
PC	16+43.38	1004681.5405	1267066.7702	S55°46'06.7"E	41.82	05°59'35.3"	14°19'26.2"	41.84	20.94	400.00		
PT	16+85.22	1004658.0146	1267101.3466	S59°10'27.9"E	90.94							
PC	17+76.16	1004611.4160	1267179.4372	S57°15'45.8"E	36.70	03°49'24.2"	10°25'02.7"	36.70	18.36	550.00		
END	18+12.86	1004591.5718	1267210.3036									

PROPOSED ALIGNMENT: DR1

POINT	STATION	NORTHING	EASTING	BEARING	DIST	DELTA	D	L	T	R	LT	ST
START	20+00.00	1004780.2576	1266802.5187	N37°07'20.1"W	13.77							
HPI	20+13.77	1004791.2348	1266794.2100	N36°08'15.3"W	12.94							
PC	20+26.70	1004801.6825	1266786.5808	N08°34'40.3"W	12.81	55°07'10.1"	53°49'02.3"	13.31	7.22	13.85		
END	20+40.02	1004814.3512	1266784.6699									

PROPOSED ALIGNMENT: DR2

POINT	STATION	NORTHING	EASTING	BEARING	DIST	DELTA	D	L	T	R	LT	ST
START	29+94.00	1004878.5907	1266979.1420	S35°41'01.6"W	31.18							
PC	30+25.18	1004853.2629	1266960.9530	S29°32'32.7"W	22.01	12°13'45.2"	55°27'12.5"	22.05	11.07	103.32		
END	30+47.24	1004834.1133	1266950.1000									

NOTES:

1. THE PROPOSED ALIGNMENT CONTROL DATA FOR THIS PROJECT HAS BEEN COMPILED FROM VARIOUS SOURCES. IF FURTHER INFORMATION REGARDING PROJECT CONTROL IS NEEDED, PLEASE CONTACT THE LOCATION AND SURVEYS UNIT.

HB-0044
R/W | 020-1

NORTH CAROLINA DEPARTMENT OF TRANSPORTATION

PROFESSIONAL LAND SURVEYOR

NORTH CAROLINA PROFESSIONAL SEAL L-5617 LAND SURVEYOR SARAH J. VINCENT

DOCUMENT NOT CONSIDERED FINAL UNLESS ALL SIGNATURES ARE COMPLETED

2024 STANDARD SPECIFICATIONS

TIP PROJECT: HB-0044
County: Ashe

PREPARED FOR

LOCATION AND SURVEYS UNIT

PREPARED BY

wsp

GEOSPHERE LAND SURVEYING OF NC
128 TALBERT ROAD
MOORESVILLE NC 28117
FIRM C-3241

Docusign Envelope ID: D5EE95A6-6FE7-4F2A-8F0C-7F9EB94C2B41

5/26/20

RIGHT OF WAY CONTROL SHEET

I , Sarah J Vincent , PLS, CERTIFY THAT THE RIGHT OF WAY AND PERMANENT EASEMENT MONUMENTATION FOR THIS PROJECT SHOWN HEREIN WAS COMPLETED UNDER MY DIRECT AND RESPONSIBLE CHARGE FROM AN ACTUAL SURVEY MADE UNDER MY SUPERVISION; THAT ALL HORIZONTAL CLOSURES HAD A MINIMUM RATIO OF PRECISION OF 1:10,000 (CLASS A). FIELD WORK WAS PERFORMED ON 8/25/2025, AND ALL COORDINATES ARE BASED ON NAD83/NA 2011; THAT THIS SURVEY WAS PERFORMED TO MEET THE REQUIREMENTS OF 21NCAC 56.1600 AS APPLICABLE.

THIS 28TH DAY OF AUGUST, 2025.

DocuSigned by:
Sarah Vincent
860541788A5848A...

PROFESSIONAL LAND SURVEYOR L-5617

PERMANENT ROW MARKER IRON PIN AND CAP: L				
STATION	OFFSET	NORTHING	EASTING	
11+99.70	16.45	1004871.5622	1266730.1581	POINT FALLS IN FENCE - STAKE ONLY
11+99.84	9.01	1004874.3152	1266737.0686	
12+00.79	-9.00	1004880.3752	1266754.0550	
12+21.56	-37.43	1004870.3825	1266788.2791	
12+21.59	-28.49	1004867.2820	1266779.8989	
12+24.59	37.55	1004841.7565	1266718.9136	
12+54.48	41.43	1004801.8759	1266733.6401	
12+70.15	42.50	1004780.3022	1266757.1789	
12+70.22	-36.72	1004849.3136	1266796.0742	
12+97.06	41.72	1004771.4938	1266810.6653	FALLS IN ROAD - SET DISC
12+98.42	47.36	1004766.4480	1266814.4845	FALLS IN ROAD - SET DISC
13+10.79	37.50	1004778.5023	1266824.7255	
13+10.98	43.65	1004772.5004	1266826.0957	
14+36.42	-42.94	1004879.1453	1266948.2774	
14+50.99	36.65	1004800.2930	1266935.9034	
14+65.55	-42.94	1004849.0373	1266999.1078	
15+14.37	-37.46	1004789.4111	1267018.0592	
15+20.99	38.12	1004755.9518	1266949.9966	
15+44.67	9.00	1004744.9805	1266988.9923	
15+46.24	-9.00	1004753.7444	1267004.7924	
15+46.66	-24.82	1004762.3248	1267018.0883	

PERMANENT EASEMENT MARKER IRON PIN AND CAP: L				
STATION	OFFSET	NORTHING	EASTING	
13+30.67	37.50	1004782.3263	1266844.2362	POINT NOT SET - FALLS IN RIVER
13+30.85	43.04	1004776.9234	1266845.4697	POINT NOT SET - FALLS IN RIVER
13+84.28	-37.50	1004866.2373	1266882.4199	POINT NOT SET - FALLS IN RIVER
13+84.28	-42.50	1004871.1440	1266881.4582	POINT NOT SET - FALLS IN RIVER
13+93.99	37.50	1004794.5053	1266906.3743	POINT NOT SET - FALLS IN RIVER
13+94.28	-37.50	1004868.1607	1266892.2332	POINT NOT SET - FALLS IN RIVER
13+94.28	-42.50	1004873.0673	1266891.2715	POINT NOT SET - FALLS IN RIVER
14+95.46	37.50	1004783.5477	1266941.2256	
15+03.57	58.78	1004769.3763	1266923.4053	POINT NOT SET - FALLS IN RIVER

NOTES:

1. IF FURTHER INFORMATION REGARDING PROJECT CONTROL IS NEEDED, PLEASE CONTACT THE LOCATION AND SURVEYS UNIT.

HB-0044
R/W | 03E-I

NORTH CAROLINA DEPARTMENT OF TRANSPORTATION

PROFESSIONAL LAND SURVEYOR
NORTH CAROLINA PROFESSIONAL SEAL L-5617 LAND SURVEYOR SARAH J VINCENT

DOCUMENT NOT CONSIDERED FINAL UNLESS ALL SIGNATURES ARE COMPLETED

2024 STANDARD SPECIFICATIONS

TIP PROJECT: HB-0044
County: Ashe

PREPARED FOR

LOCATION AND SURVEYS UNIT

PREPARED BY

wsp

GEOSPHERE LAND SURVEYING OF NC
128 TALBERT ROAD
MOORESVILLE NC 28117
FIRM C-3241

Docusign Envelope ID: D5EE95A6-6FE7-4F2A-8F0C-7F9EB94C2B41

5/26/20

I , Sarah J. Vincent , PLS, CERTIFY THAT THE RIGHT OF WAY AND PERMANENT EASEMENT MONUMENTATION FOR THIS PROJECT SHOWN HEREIN WAS COMPLETED UNDER MY DIRECT AND RESPONSIBLE CHARGE FROM AN ACTUAL SURVEY MADE UNDER MY SUPERVISION; THAT ALL HORIZONTAL CLOSURES HAD A MINIMUM RATIO OF PRECISION OF 1:10,000 (CLASS A). FIELD WORK WAS PERFORMED ON 8/25/2025, AND ALL COORDINATES ARE BASED ON NAD83/NA 2011; THAT THIS SURVEY WAS PERFORMED TO MEET THE REQUIREMENTS OF 21NCAC 56.1600 AS APPLICABLE.

THIS 28TH DAY OF AUGUST, 2025.

DocuSigned by:
Sarah Vincent
860541788A5848A...

PROFESSIONAL LAND SURVEYOR L-5617

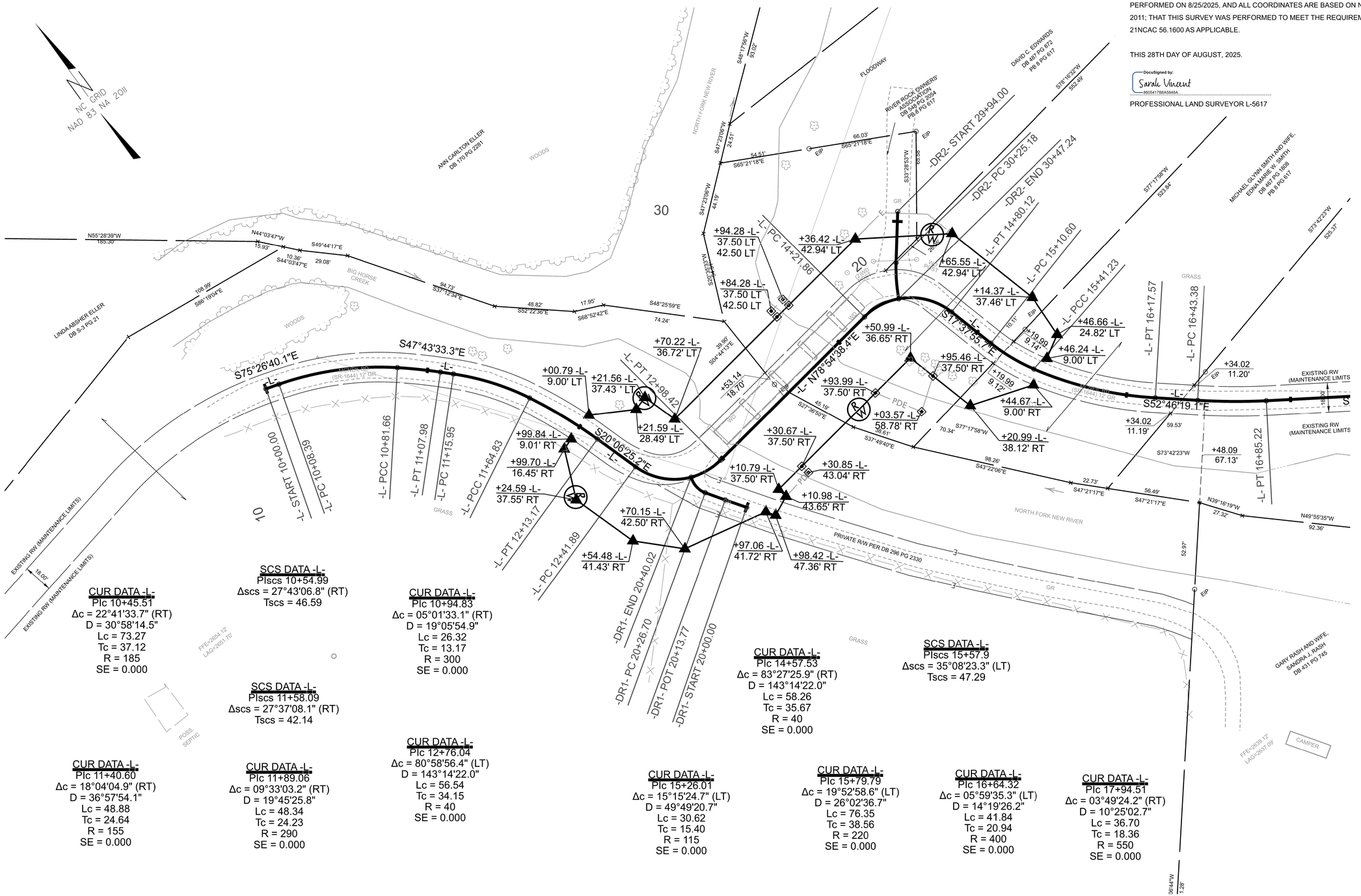

CUR DATA -L-
PIc 10+45.51
Δc = 22°41'33.7" (RT)
D = 30°58'14.5"
Lc = 73.27
Tc = 37.12
R = 185
SE = 0.000

SCS DATA -L-
PIscs 10+54.99
Δscs = 27°43'06.8" (RT)
Tscs = 46.59

CUR DATA -L-
PIc 10+94.83
Δc = 05°01'33.1" (RT)
D = 19°05'54.9"
Lc = 26.32
Tc = 13.17
R = 300
SE = 0.000

SCS DATA -L-
PIscs 11+58.09
Δscs = 27°37'08.1" (RT)
Tscs = 42.14

CUR DATA -L-
PIc 12+76.04
Δc = 80°58'56.4" (LT)
D = 143°14'22.0"
Lc = 56.54
Tc = 34.15
R = 40
SE = 0.000

CUR DATA -L-
PIc 14+57.53
Δc = 83°27'25.9" (RT)
D = 143°14'22.0"
Lc = 58.26
Tc = 35.67
R = 40
SE = 0.000

SCS DATA -L-
PIscs 15+57.9
Δscs = 35°08'23.3" (LT)
Tscs = 47.29

CUR DATA -L-
PIc 11+40.60
Δc = 18°04'04.9" (RT)
D = 36°57'54.1"
Lc = 48.88
Tc = 24.64
R = 155
SE = 0.000

CUR DATA -L-
PIc 11+89.06
Δc = 09°33'03.2" (RT)
D = 19°45'25.8"
Lc = 48.34
Tc = 24.23
R = 290
SE = 0.000

CUR DATA -L-
PIc 15+26.01
Δc = 15°15'24.7" (LT)
D = 49°49'20.7"
Lc = 30.62
Tc = 15.40
R = 115
SE = 0.000

CUR DATA -L-
PIc 15+79.79
Δc = 19°52'58.6" (LT)
D = 26°02'36.7"
Lc = 76.35
Tc = 38.56
R = 220
SE = 0.000

CUR DATA -L-
PIc 16+64.32
Δc = 05°59'35.3" (LT)
D = 14°19'26.2"
Lc = 41.84
Tc = 20.94
R = 400
SE = 0.000

CUR DATA -L-
PIc 17+94.51
Δc = 03°49'24.2" (RT)
D = 10°25'02.7"
Lc = 36.70
Tc = 18.36
R = 550
SE = 0.000

30' 15' 0' 30' 60'

NOTES:

1. IF FURTHER INFORMATION REGARDING PROJECT CONTROL IS NEEDED, PLEASE CONTACT THE LOCATION AND SURVEYS UNIT.

HB-0044
R/W | RW04

NORTH CAROLINA DEPARTMENT OF TRANSPORTATION

PROFESSIONAL LAND SURVEYOR

NORTH CAROLINA PROFESSIONAL SEAL L-5617 LAND SURVEYOR SARAH J. VINCENT

DOCUMENT NOT CONSIDERED FINAL UNLESS ALL SIGNATURES ARE COMPLETED

2024 STANDARD SPECIFICATIONS

TIP PROJECT: HB-0044
County: Ashe

PREPARED FOR

LOCATION AND SURVEYS UNIT

PREPARED BY

wsp

GEOSPHERE LAND SURVEYING OF NC
128 TALBERT ROAD
MOORESVILLE NC 28117
FIRM C-5241

Docusign Envelope ID: 86528B62-0882-828F-83F0-7F5A62674B59

STATE OF NORTH CAROLINA
DIVISION OF HIGHWAYS

TRANSPORTATION MANAGEMENT PLAN

ASHE COUNTY

LOCATION: *REPLACE AND REALIGN BRIDGE NO. 040093 ON SR 1644 (MCNEIL ROAD) OVER NORTH FORK NEW RIVER*

TYPE OF WORK: *GRADING, PAVING, STRUCTURE AND DRAINAGE*

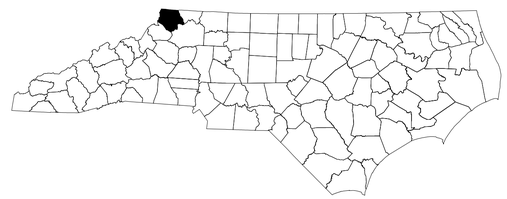

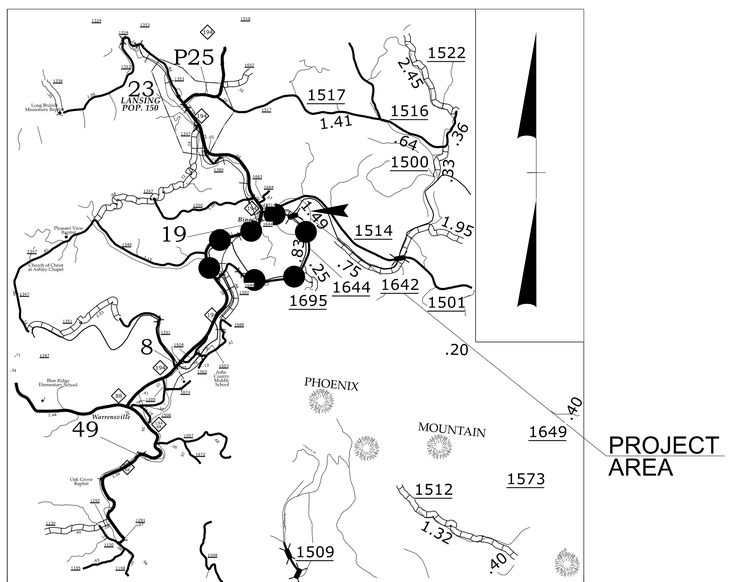

VICINITY MAP (NTS)
OFFSITE DETOUR ROUTE

INDEX OF SHEETS

SHEET NO.	TITLE
TMP-1	TITLE SHEET, VICINITY MAP, AND INDEX OF SHEETS
TMP-1A	LIST OF APPLICABLE ROADWAY STANDARD DRAWINGS, GENERAL NOTES, PHASING, AND LEGEND
TMP-2	DETOUR ROUTE AND SIGNING
TMP-3	SIGNING DETAIL

SHEET NO.
TMP-1

HB-0044

TIP PROJECT:

DOCUMENT NOT CONSIDERED FINAL UNLESS ALL SIGNATURES COMPLETED

WORK ZONE SAFETY & MOBILITY
"from the MOUNTAINS to the COAST"

PLANS PREPARED BY:

DAMIAN J. GEORGE, PE

CASSIDY L. MENGELKAMP, EI

NCDOT CONTACTS:

DANIEL ADAMS, PE
NCDOT PROJECT MANAGER

ms consultants, inc.
5444 Wake Park Blvd.
Suite 160
Raleigh, NC 27607
NC License Number : C-3239

DIVISION OF HIGHWAYS · STATE OF NORTH CAROLINA · DEPARTMENT OF TRANSPORTATION · WORK ZONE TRAFFIC CONTROL

APPROVED: Signed by: Damian J. George 948E6122181342C2... 7/8/2026

DATE: 5-19-2026

SEAL

NORTH CAROLINA PROFESSIONAL ENGINEER SEAL 061679 DAMIAN J. GEORGE

6/18/2026
pw://ncdot-pw.bentley.com:ncdot-pw-01/Documents/Division_II/HB-0044/Work Zone Traffic Control/HB-0044-TC-TMP-Title
User:CMengelkamp

Docusign Envelope ID: 86528B62-0882-828F-83F0-7F5A62674B59

PROJ. REFERENCE NO.	SHEET NO.
HB-0044	TMP-1A

ROADWAY STANDARD DRAWINGS

THE FOLLOWING ROADWAY STANDARDS AS SHOWN IN "ROADWAY STANDARD DRAWINGS" - N.C. DEPARTMENT OF TRANSPORTATION - RALEIGH, N.C., DATED JANUARY 2024 ARE APPLICABLE TO THIS PROJECT AND BY REFERENCE HEREBY ARE CONSIDERED A PART OF THESE PLANS:

STD. NO.	TITLE
1101.01	WORK ZONE WARNING SIGNS
1101.03	TEMPORARY ROAD CLOSURES
1101.11	TRAFFIC CONTROL DESIGN STANDARDS
1110.01	STATIONARY WORK ZONE SIGNS
1130.01	DRUMS
1135.01	CONES
1145.01	BARRICADES

GENERAL NOTES

CHANGES MAY BE REQUIRED WHEN PHYSICAL DIMENSIONS IN THE DETAIL DRAWINGS, STANDARD DETAILS, AND ROADWAY DETAILS ARE NOT ATTAINABLE TO MEET FIELD CONDITIONS OR RESULT IN DUPLICATE OR UNDESIRED OVERLAPPING OF DEVICES. MODIFICATION MAY INCLUDE: MOVING, SUPPLEMENTING, COVERING, OR REMOVAL OF DEVICES AS DIRECTED BY THE ENGINEER.

THE FOLLOWING GENERAL NOTES APPLY AT ALL TIMES FOR THE DURATION OF THE CONSTRUCTION PROJECT EXCEPT WHEN OTHERWISE NOTED IN THE PLAN OR DIRECTED BY THE ENGINEER.

TRAFFIC PATTERN ALTERATIONS

A) NOTIFY THE ENGINEER THIRTY (30) CALENDAR DAYS PRIOR TO ANY TRAFFIC PATTERN ALTERATION.

SIGNING

B) INSTALL ADVANCE WORK ZONE WARNING SIGNS WHEN WORK IS WITHIN 40 FT FROM THE EDGE OF TRAVEL LANE AND NO MORE THAN THREE (3) DAYS PRIOR TO THE BEGINNING OF CONSTRUCTION.

C) PROVIDE SIGNING AND DEVICES REQUIRED TO CLOSE THE ROAD ACCORDING TO THE ROADWAY STANDARD DRAWINGS AND TRAFFIC CONTROL PLANS.

PROVIDE SIGNING REQUIRED FOR THE OFF-SITE DETOUR ROUTE AS SHOWN IN THE TRAFFIC CONTROL PLANS.

D) COVER OR REMOVE ALL SIGNS AND DEVICES REQUIRED TO CLOSE THE ROAD WHEN ROAD CLOSURE IS NOT IN OPERATION.

COVER OR REMOVE ALL SIGNS REQUIRED FOR THE OFF-SITE DETOUR WHEN THE DETOUR IS NOT IN OPERATION.

E) ENSURE ALL NECESSARY SIGNING IS IN PLACE PRIOR TO ALTERING ANY TRAFFIC PATTERN.

TRAFFIC CONTROL DEVICES

F) PLACE TYPE III BARRICADES, WITH "ROAD CLOSED" SIGN R11-2 ATTACHED, OF SUFFICIENT LENGTH TO CLOSE ENTIRE ROADWAY.

LEGEND

GENERAL

WORK AREA

REMOVAL

TRAFFIC CONTROL DEVICES

BARRICADE (TYPE III)

CONE

DRUM SKINNY DRUM TUBULAR MARKER

TEMPORARY SIGNING

PORTABLE SIGN

STATIONARY SIGN

STATIONARY OR PORTABLE SIGN

PHASING

STEP 1 - INSTALL ADVANCE WARNING SIGNS ACCORDING TO ROADWAY STANDARD DRAWING 1101.01 (SHEET 3 OF 3).

STEP 2 - INSTALL DETOUR SIGNS AS SHOWN ON TMP-2, AND COVER.

STEP 3 - USING ROADWAY STANDARD DRAWING 1101.03 (SHEET 1 OF 9) , INSTALL TYPE III BARRICADES AS SHOWN ON TMP-2, UNCOVER DETOUR SIGNS, AND CLOSE ROAD -L- TO THROUGH TRAFFIC.

STEP 4 - CONSTRUCT BRIDGE, APPROACHES, AND DRIVEWAY TIE-INS (AS NEEDED). MAINTAIN ACCESS TO EXISTING RESIDENCES ADJACENT TO THE BRIDGE.

STEP 5 - INSTALL PERMANENT PAVEMENT MARKINGS AND MARKERS.

STEP 6 - OPEN ROAD -L- TO TRAFFIC AND REMOVE SIGNS.

ms consultants, inc.
5444 Wake Park Blvd.
Suite 160
Raleigh, NC 27607
NC License Number : C-3239

APPROVED: Signed by: Damian J George 94BE6122181340C... 7/8/2026

DATE: 5-19-2026

SEAL

NORTH CAROLINA PROFESSIONAL SEAL 061679 ENGINEER DAMIAN J. GEORGE

DOCUMENT NOT CONSIDERED FINAL UNLESS ALL SIGNATURES COMPLETED

DIVISION OF HIGHWAYS · STATE OF NORTH CAROLINA · DEPARTMENT OF TRANSPORTATION · WORK ZONE TRAFFIC CONTROL

ROADWAY STANDARD DRAWINGS, LEGEND, GENERAL NOTES, & PHASING

6/18/2026
pw://ncdot-pw.bentley.com:ncdot-pw-01/Documents/Division_11/HB-0044/Work Zone Traffic Control/HB-0044-TC-TMP-Title-1a
User:cWengelkamp

Docusign Envelope ID: 86528B62-0882-828F-83F0-7F5A62674B59

PROJ. REFERENCE NO.	SHEET NO.
HB-0044	TMP-2

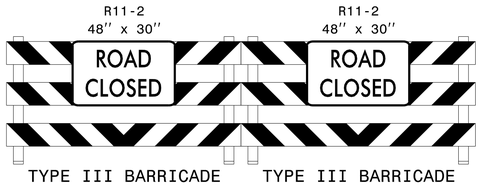

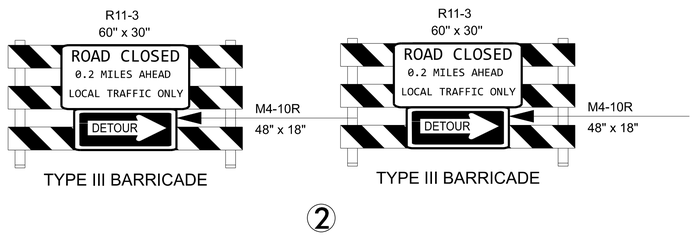

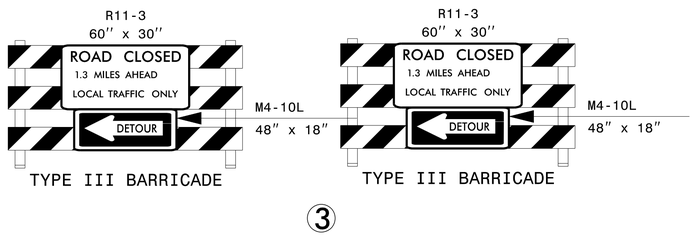

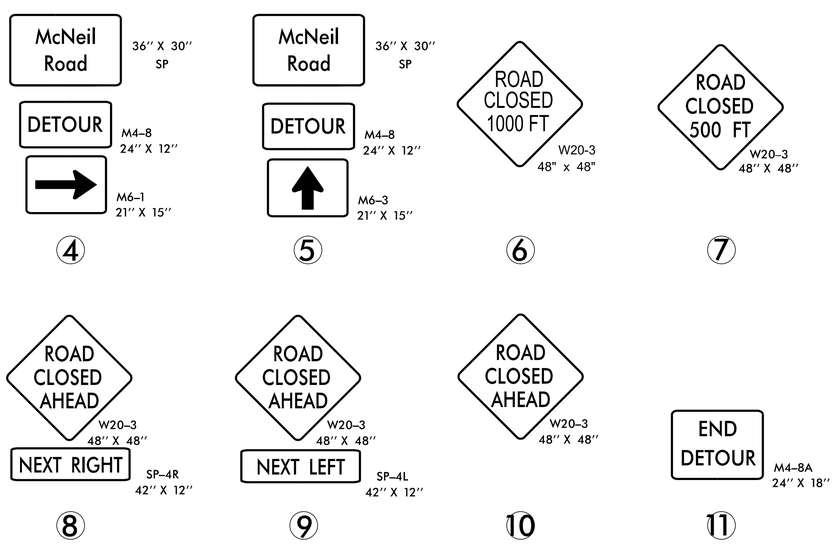

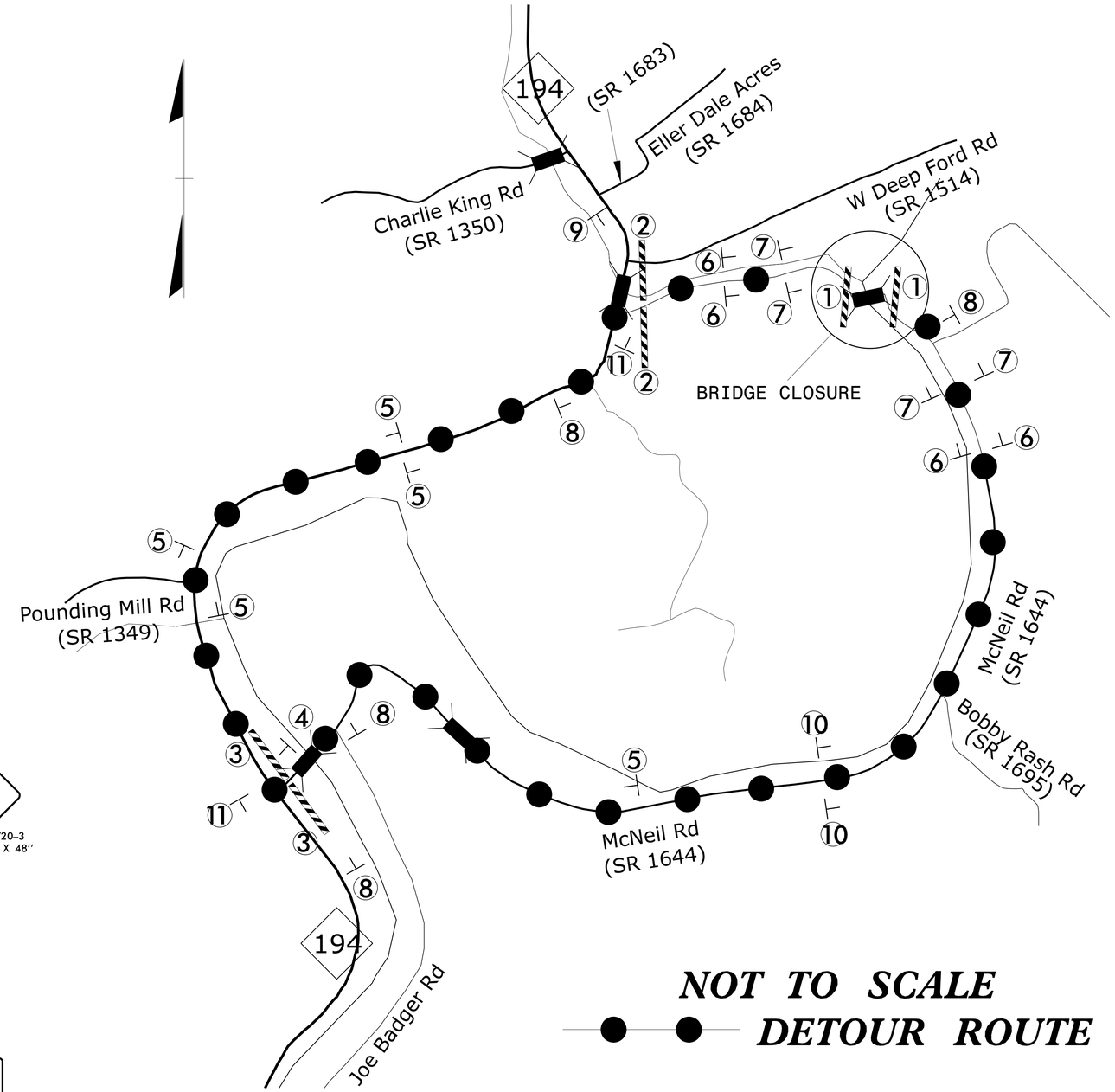

ms consultants, inc.
5444 Wake Park Blvd.
Suite 160
Raleigh, NC 27607
NC License Number : C-3239

APPROVED: Signed by: Damian J. George 948BE61221813AC2... 7/8/2026

DATE: 5-19-2026

SEAL

NORTH CAROLINA PROFESSIONAL SEAL 061679 ENGINEER DAMIAN J. GEORGE

DIVISION OF HIGHWAYS STATE OF NORTH CAROLINA DEPARTMENT OF TRANSPORTATION WORK ZONE TRAFFIC CONTROL

DOCUMENT NOT CONSIDERED FINAL UNLESS ALL SIGNATURES COMPLETED

DETOUR ROUTE AND SIGNS

6/18/2026
pw://ncdot-pw.bentley.com:ncdot-pw-01/Documents/Division_11/HB-0044/Work Zone Traffic Control/HB-0044-TC-TMP-2
User:CWengelkamp

Docusign Envelope ID: 86528B62-0882-828F-83F0-7F5A62674B59

PROJ. REFERENCE NO.	SHEET NO.
HB-0044	TMP-3

SIGN NUMBER: SP
TYPE: STATIONARY
QUANTITY: SEE PLANS

SIGN WIDTH: 3′-0″
HEIGHT: 2′-6″
TOTAL AREA: 7.5 Sq.Ft.

BORDER TYPE: INSET
RECESS: 0.50″
WIDTH: 0.63″
RADII: 1.5″

NO. Z BARS:
LENGTH:

BACKG COLOR: Fluorescent Orange
COPY COLOR: Black

SYMBOL	X	Y	WID	HT

MAT′L: 0.080″ (2.0 mm) ALUMINUM

DESIGN BY: CLM
PROJECT ID: HB-0044

CHECKED BY: TAG
LOCATION:

Feburary 03, 2026
DIV: 11

USE NOTES: 1,2

1. Legend and border shall be direct applied black non-reflective sheeting.
2. Background shall be NC GRADE B fluorescent orange retroreflective sheeting.

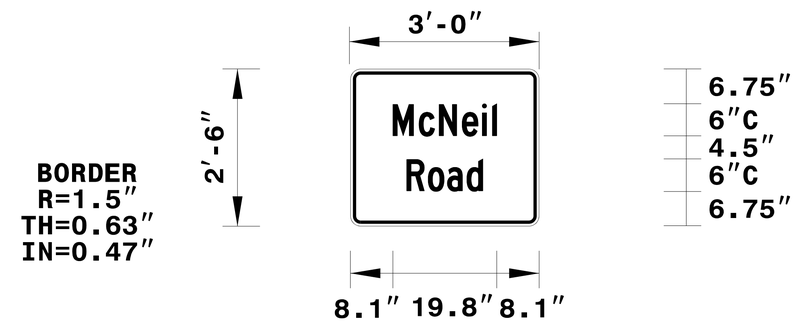

Spacing Factor is 1 unless specified otherwise

LETTER POSITIONS

Letter locations are panel edge to lower left corner																									Series/Size Text Length
M	c	N	e	i	l																				C 2000
8.1	13.1	17	21.3	25.1	27.1																				19.8
R	o	a	d																						C 2000
10.8	14.8	18.5	22.2																						14.5

FILENAME: McNeil Road

NORTH CAROLINA D.O.T. SIGN DETAIL

ms consultants, inc.
5444 Wake Park Blvd.
Suite 160
Raleigh, NC 27607
NC License Number : C-3239

APPROVED: Signed by: Damian J George 948E61221B134C2 7/8/2026
DATE: 5-19-2026
SEAL

NORTH CAROLINA PROFESSIONAL SEAL 061679 ENGINEER DAMIAN J. GEORGE

DOCUMENT NOT CONSIDERED FINAL UNLESS ALL SIGNATURES COMPLETED

DIVISION OF HIGHWAYS · STATE OF NORTH CAROLINA · DEPARTMENT OF TRANSPORTATION · WORK ZONE TRAFFIC CONTROL

SIGN DESIGN

6/18/2026
pw://ncdot-pw.bentley.com:ncdot-pw-01/Documents/Division_11/HB-0044/Work Zone Traffic Control/HB-0044-TC-TMP-3
User:cMengelkamp

PROJECT: HB-0044

TIP

STATE	STATE PROJECT REFERENCE NO.	SHEET NO.	TOTAL SHEETS
N.C.	HB-0044	EC-1	

STATE PROJ. NO.	F.A. PROJ. NO.	DESCRIPTION

STATE OF NORTH CAROLINA
DIVISION OF HIGHWAYS

PLAN FOR PROPOSED
HIGHWAY EROSION CONTROL

ASHE COUNTY

LOCATION: *REPLACE AND REALIGN BRIDGE NO. 040093 ON SR 1644 (MCNEIL ROAD) OVER NORTH FORK NEW RIVER*

TYPE OF WORK: *GRADING, PAVING, STRUCTURE AND DRAINAGE*

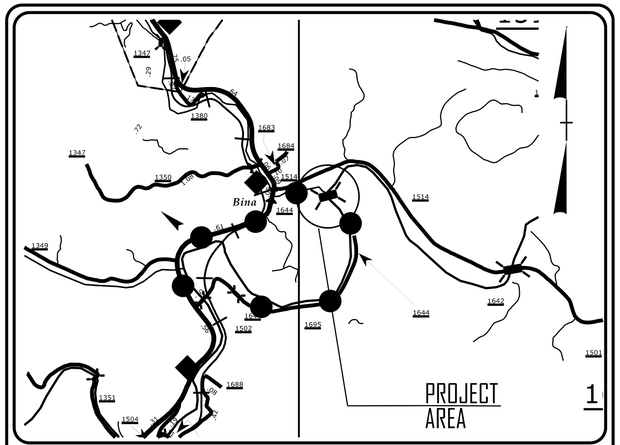

VICINITY MAP
NOT TO SCALE

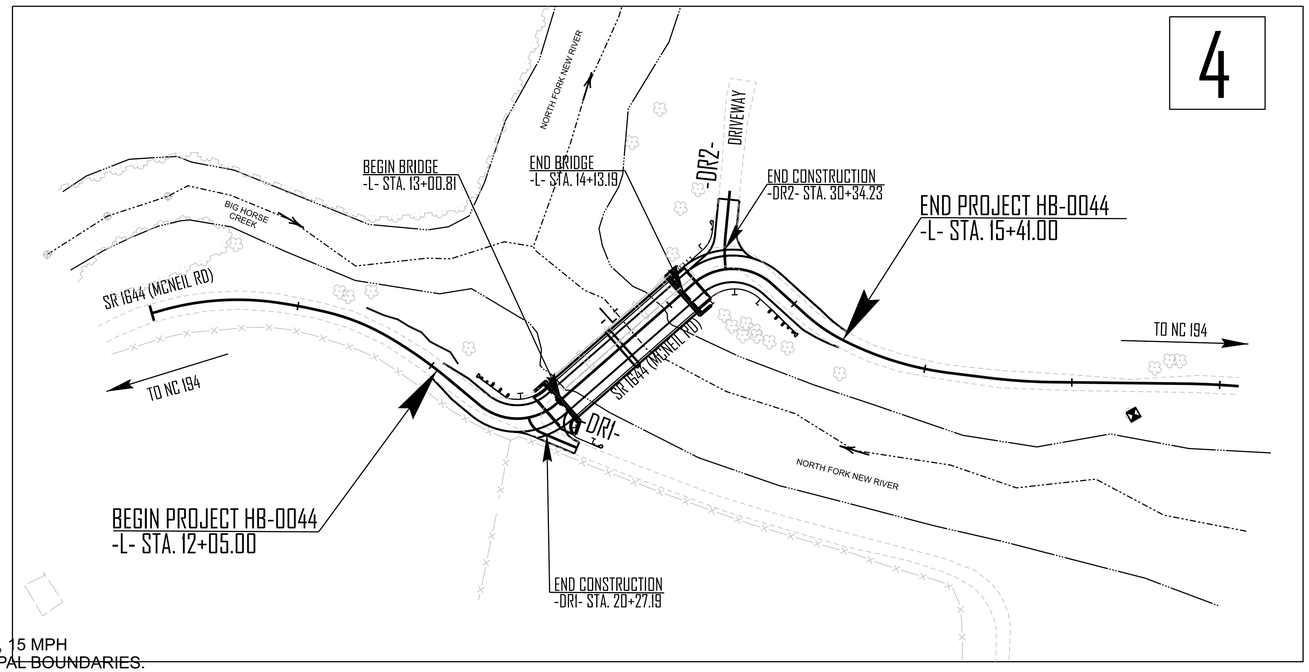

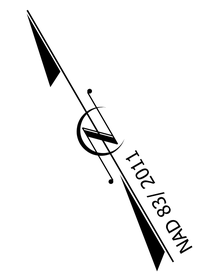

**DESIGN EXCEPTION FOR DESIGN SPEED, 15 MPH
THIS PROJECT IS NOT WITHIN ANY MUNICIPAL BOUNDARIES.
CLEARING ON THIS PROJECT SHALL BE PERFORMED TO THE LIMITS ESTABLISHED BY METHOD III.

THIS PROJECT CONTAINS EROSION CONTROL PLANS FOR CLEARING AND GRUBBING PHASE OF CONSTRUCTION.

THIS PROJECT HAS BEEN DESIGNED TO SENSITIVE WATERSHED STANDARDS.

HIGH QUALITY WATER(S) EXIST ON THIS PROJECT

High Quality Water Zone(s) Exist
From Sta. -L- 12+05.00
to Sta. -L- 15+41.00
Refer To E. C. Special Provisions for Special Considerations.

GRAPHIC SCALE

20 10 0 20 40
PLANS

THESE EROSION AND SEDIMENT CONTROL PLANS COMPLY WITH THE REGULATIONS SET FORTH BY THE NCG-010000 GENERAL STORMWATER CONSTRUCTION PERMIT ISSUED BY THE NORTH CAROLINA DEPARTMENT OF ENVIRONMENTAL QUALITY DIVISION OF ENERGY, MINERAL, AND LAND RESOURCES.

Prepared In the Office of:

MI ENGINEERING, PLLC

1011 SCHAUB DR, SUITE 100
RALEIGH, NC 27606
(919) 851-6606
FIRM PE NUMBER: P-0671

Designed by:

KAREN HEFNER, PE ***3824***
NAME *LEVEL III CERTIFICATION NO.*

Roadway Standard Drawings

The "Roadway Standard Drawings"- Roadway Design Unit - N. C. Department of Transportation - Raleigh, N. C., dated January 2024 and the latest revision thereto are applicable to this project and by reference hereby are considered a part of these plans.

$$$$$$$SYSTIME$$$$$
$$$$$$$PAGE$$$$$
$$$$$$$SECTION$$$$$$$$$$$$$$$$$$$$$
$$$$USERNAME$$$$

PROJECT REFERENCE NO.	SHEET NO.
HB-0044	EC-02

ROADSIDE ENVIRONMENTAL PROJECT ENGINEER

DIVISION OF HIGHWAYS
STATE OF NORTH CAROLINA

EROSION & SEDIMENT CONTROL LEGEND

Std. #	Description	Symbol
1605.01	Temporary Silt Fence	
1606.01	Special Sediment Control Fence	
1622.01	Temporary Berms and Slope Drains	
1630.02	Silt Basin Type B	
1630.03	Temporary Silt Ditch	TSD
1630.04	Stilling Basin	
1630.05	Temporary Diversion	TD
1630.06	Special Stilling Basin	
1630.07	Skimmer Basin	
1630.08	Tiered Skimmer Basin	
1630.09	Earthen Dam with Skimmer	
	Infiltration Basin	
	Rock Inlet Sediment Trap:	
1632.01	Type A	A
1632.02	Type B	B
1632.03	Type C	C

Std. #	Description	Symbol
1633.01	Temporary Rock Silt Check Type A	
1633.02	Temporary Rock Silt Check Type B	
1633.03	Temporary Rock Silt Check Type A with Excelsior Matting and Flocculant	
1634.01	Temporary Rock Sediment Dam Type A	
1634.02	Temporary Rock Sediment Dam Type B	
1635.01	Rock Pipe Inlet Sediment Trap Type A	A
1635.02	Rock Pipe Inlet Sediment Trap Type B	B
1636.01	Excelsior Wattle Check	
1636.01	Excelsior Wattle Check with Flocculant	
1636.01	Coir Fiber Wattle Check	
1636.01	Coir Fiber Wattle Check with Flocculant	
1636.02	Silt Fence Excelsior Wattle Break	EW
	Silt Fence Coir Fiber Wattle Break	CFW
1636.03	Excelsior Wattle Barrier	EW EW EW
1636.03	Coir Fiber Wattle Barrier	CFW CFW CFW

3/17/2026
HB-0044_EC-
H:\ENVIRONMENTAL\RALEIGH N.C.

PROJECT REFERENCE NO.	SHEET NO.
HB-0044	EC-02A

ONSITE CONCRETE WASHOUT STRUCTURE WITH LINER

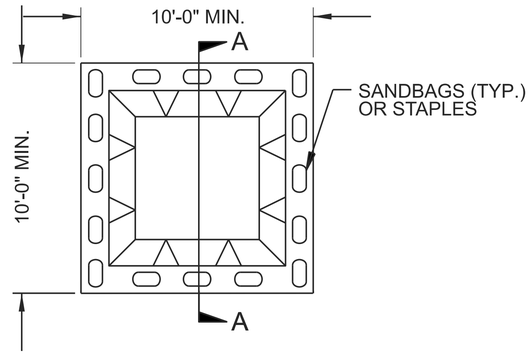

PLAN

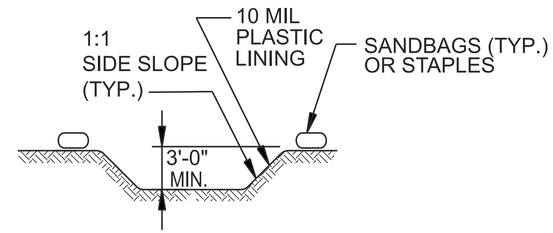

SECTION A-A

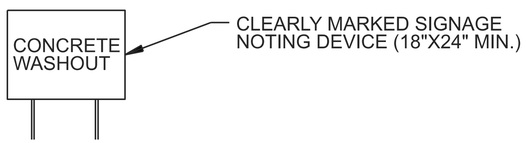

NOTES:
1. ACTUAL LOCATION DETERMINED IN FIELD

2. THE CONCRETE WASHOUT STRUCTURES SHALL BE MAINTAINED WHEN THE LIQUID AND/OR SOLID REACHES 75% OF THE STRUCTURES CAPACITY TO PROVIDE ADEQUATE HOLDING CAPACITY WITH A MINIMUM 12 INCHES OF FREEBOARD.

3.CONCRETE WASHOUT STRUCTURE NEEDS TO BE CLEARLY MARKED WITH SIGNAGE NOTING DEVICE.

BELOW GRADE WASHOUT STRUCTURE

NOT TO SCALE

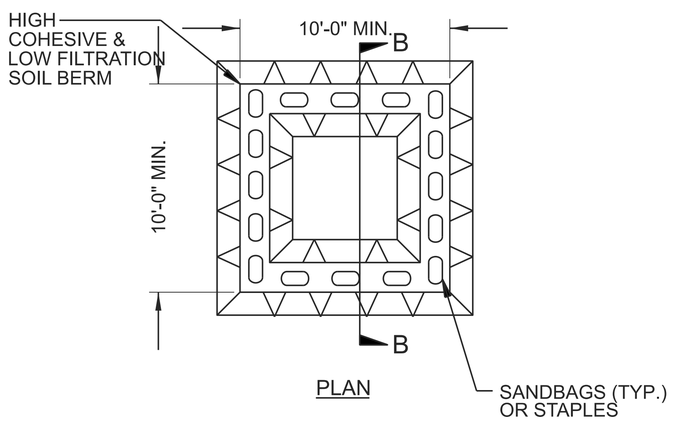

PLAN

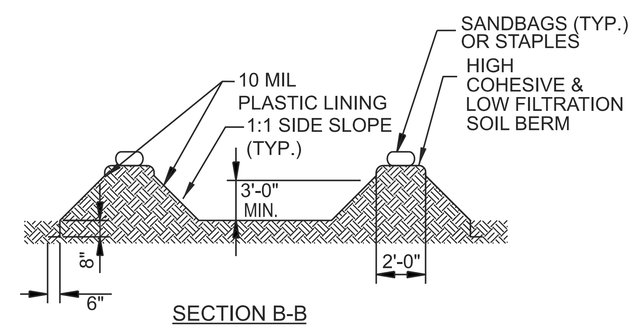

SECTION B-B

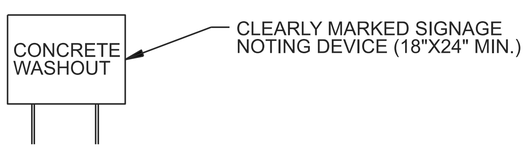

NOTES:
1. ACTUAL LOCATION DETERMINED IN FIELD

2. THE CONCRETE WASHOUT STRUCTURES SHALL BE MAINTAINED WHEN THE LIQUID AND/OR SOLID REACHES 75% OF THE STRUCTURES CAPACITY TO PROVIDE ADEQUATE HOLDING CAPACITY WITH A MINIMUM 12 INCHES OF FREEBOARD.

3.CONCRETE WASHOUT STRUCTURE NEEDS TO BE CLEARLY MARKED WITH SIGNAGE NOTING DEVICE.

ABOVE GRADE WASHOUT STRUCTURE

NOT TO SCALE

$DATE$
$FILE$
$USERNAME$

PROJECT REFERENCE NO.	SHEET NO.
HB-0044	EC-3

DIVISION OF HIGHWAYS
STATE OF NORTH CAROLINA

SOIL STABILIZATION SUMMARY SHEET

DITCH MATTING (STRAW) FOR EROSION CONTROL

CONST SHEET NO.	LINE	FROM STATION	TO STATION	SIDE	ESTIMATE (SY)
4	-L-	12+25	12+67	RT	25
4	-L-	14+12	14+24	RT	10
		SUBTOTAL, DITCH (STRAW)			35

DITCH MATTING (EXCELSIOR) FOR EROSION CONTROL

CONST SHEET NO.	LINE	FROM STATION	TO STATION	SIDE	ESTIMATE (SY)
4	-L-	12+67	12+76.5	RT	10
		SUBTOTAL, DITCH (EXCELSIOR)			10
		SUBTOTAL, DITCH (EXCELSIOR)			10
		SUBTOTAL, DITCH (STRAW)			35
		SUBTOTAL, DITCHES			45
		MISCELLANEOUS MATTING, INCLUDING MATTING FOR SLOPES,			2,000
		TO BE INSTALLED AS DIRECTED BY THE ENGINEER			
				TOTAL	2,045
				SAY	2,050

MATTING FOR EROSION CONTROL

CONST SHEET NO.	LINE	FROM STATION	TO STATION	SIDE	ESTIMATE (SY)

$DATE$
$FILEL$
$USERNAME$

PROJECT REFERENCE NO.	SHEET NO.
HB-0044	EC-3A

DIVISION OF HIGHWAYS
STATE OF NORTH CAROLINA

SOIL STABILIZATION TIMEFRAMES

SITE DESCRIPTION	STABILIZATION TIME	TIMEFRAME EXCEPTIONS
PERIMETER DIKES, SWALES, DITCHES AND SLOPES	7 DAYS	NONE
HIGH QUALITY WATER (HQW) ZONES	7 DAYS	NONE
SLOPES STEEPER THAN 3:1	7 DAYS	IF SLOPES ARE 10' OR LESS IN LENGTH AND ARE NOT STEEPER THAN 2:1, 14 DAYS ARE ALLOWED.
SLOPES 3:1 TO 4:1	14 DAYS	7 DAYS FOR SLOPES GREATER THAN 50' IN LENGTH WITH SLOPES STEEPER THAN 4:1. 7 DAYS FOR PERIMETER DIKES, SWALES, DITCHES PERIMETER SLOPES, AND HQW ZONES
ALL OTHER AREAS WITH SLOPES FLATTER THAN 4:1	14 DAYS	7 DAYS FOR PERIMETER DIKES, SWALES, DITCHES PERIMETER SLOPES, AND HQW ZONES

$DATE$
$FILEL$
$(USERNAME)$

ALL EROSION CONTROL DEVICES SHOWN ARE LOCATED WITHIN EXISTING R/W OR EASEMENT.

NOTE:
PRIOR TO INSTALLATION OF EROSION CONTROL DEVICES, CONTRACTOR SHALL VERIFY BOUNDARIES OF JURISDICTIONAL AREAS AND DELINEATE WITH SAFETY FENCE OR FLAGGING.

NOTE:
CONTRACTOR SHALL PROVIDE GROUND COVER ON EXPOSED SLOPES IN ACCORDANCE WITH THE "SOIL STABILIZATION TIMEFRAMES", SEE EC–3A.

NOTE:
PLACE TEMPORARY ROCK SEDIMENT DAMS TYPE – B AND TEMPORARY ROCK SILT CHECKS TYPE – A AT DRAINAGE OUTLETS.

ENVIRONMENTALLY SENSITIVE AREA
SEE PROJECT SPECIAL PROVISIONS

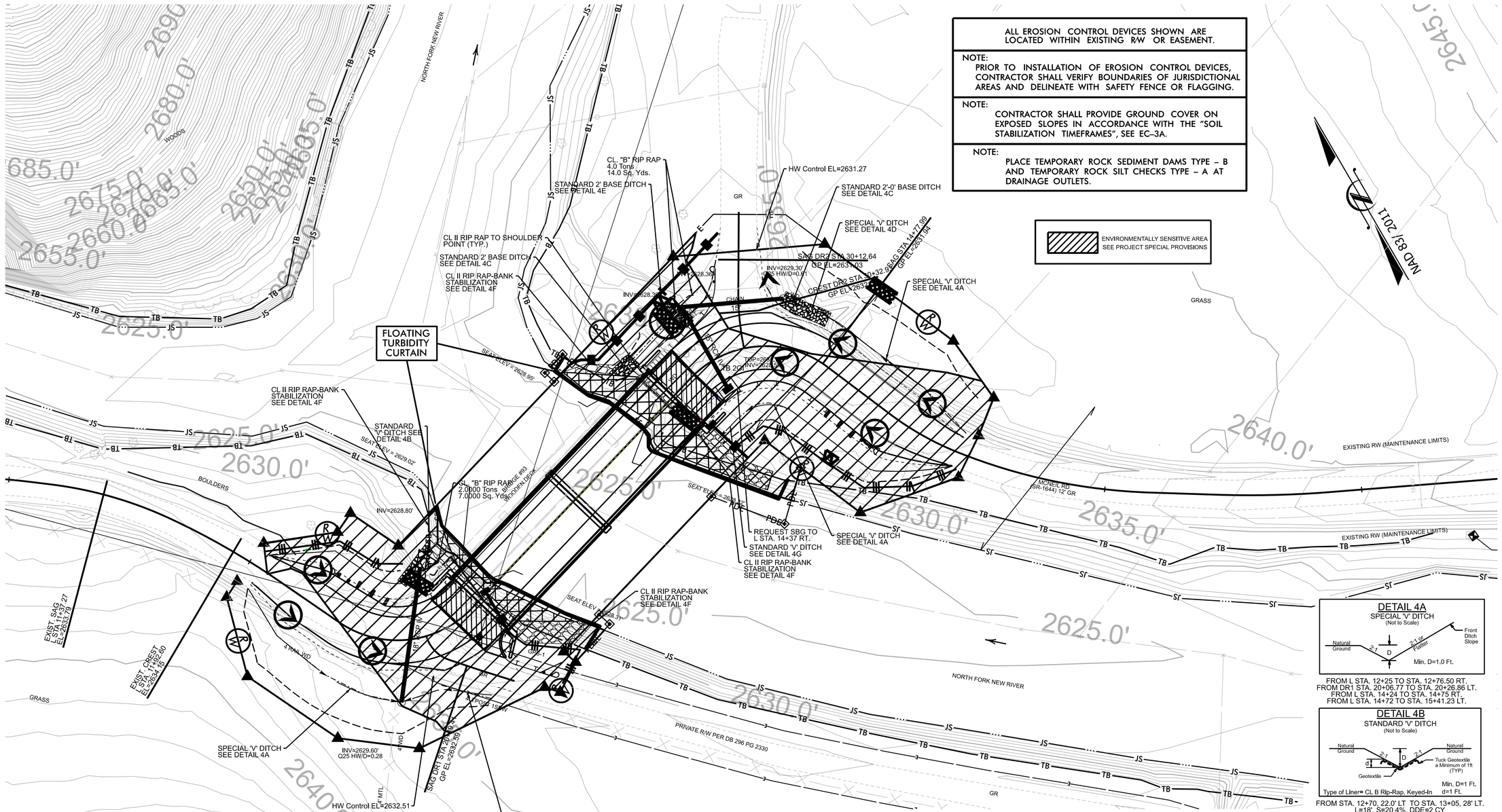

DETAIL 4A
SPECIAL 'V' DITCH
(Not to Scale)

FROM L STA. 12+25 TO STA. 12+76.50 RT.
FROM DR1 STA. 20+06.77 TO STA. 20+26.86 LT.
FROM L STA. 14+24 TO STA. 14+75 RT.
FROM L STA. 14+72 TO STA. 15+41.23 LT.

DETAIL 4B
STANDARD 'V' DITCH
(Not to Scale)

FROM STA. 12+70, 22.0' LT TO STA. 13+05, 28' LT.
L=18', S=20.4%, DDE=2 CY
2.5 TONS CL B RIP RAP, 8 SY GEOTEXTILE

DETAIL 4C
STANDARD BASE DITCH
(Not to Scale)

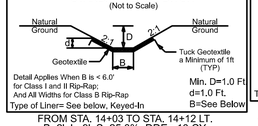

FROM STA. 14+03 TO STA. 14+12 LT.
B=2', L=9', S=25.0%, DDE= 10 CY
5 TONS CL II RIP RAP, 15 SY GEOTEXTILE
FROM STA. 14+59 TO STA. 14+65 LT.
B=0'-2', L=9', S=14.6%, DDE= 16 CY
2.5 TONS CL B RIP RAP, 8 SY GEOTEXTILE

DETAIL 4D
SPECIAL 'V' DITCH
(Not to Scale)

FROM STA. 14+65 TO STA. 14+72 LT.
1.0 TONS CL B RIP RAP, 6 SY GEOTEXTILE

DETAIL 4E
STANDARD BASE DITCH
(Not to Scale)

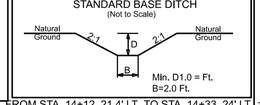

FROM STA. 14+12, 21.4' LT. TO STA. 14+33, 24' LT
L=28', S=0.577%, DDE=10 CY

DETAIL 4F
BANK STABILIZATION
(Not to Scale)

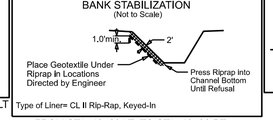

FROM STA. 13+03 LT. TO STA. 13+26 RT.
35 TONS CL II RIP RAP, 46 SY GEOTEXTILE
FROM STA. 13+89 LT. TO STA. 14+18 RT.
33 TONS CL II RIP RAP, 47 SY GEOTEXTILE

DETAIL 4G
STANDARD 'V' DITCH
(Not to Scale)

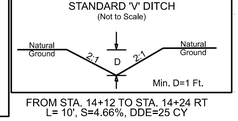

FROM STA. 14+12 TO STA. 14+24 RT
L= 10', S=4.66%, DDE=25 CY

HB-0044
EC 004 | CONST-04

NORTH CAROLINA
DEPARTMENT OF TRANSPORTATION
ASHE COUNTY

ROADSIDE ENVIRONMENTAL UNIT

HYDRAULICS ENGINEER

PREPARED BY
MB ENGINEERING
1511 SCHAUB DRIVE, SUITE 100
RALEIGH, NC 27626
919-851-0120
FIRM PE NUMBER | P-0671

CLEARING & GRUBBING
EROSION CONTROL FOR
CONSTRUCTION SHEET 04

REVISIONS

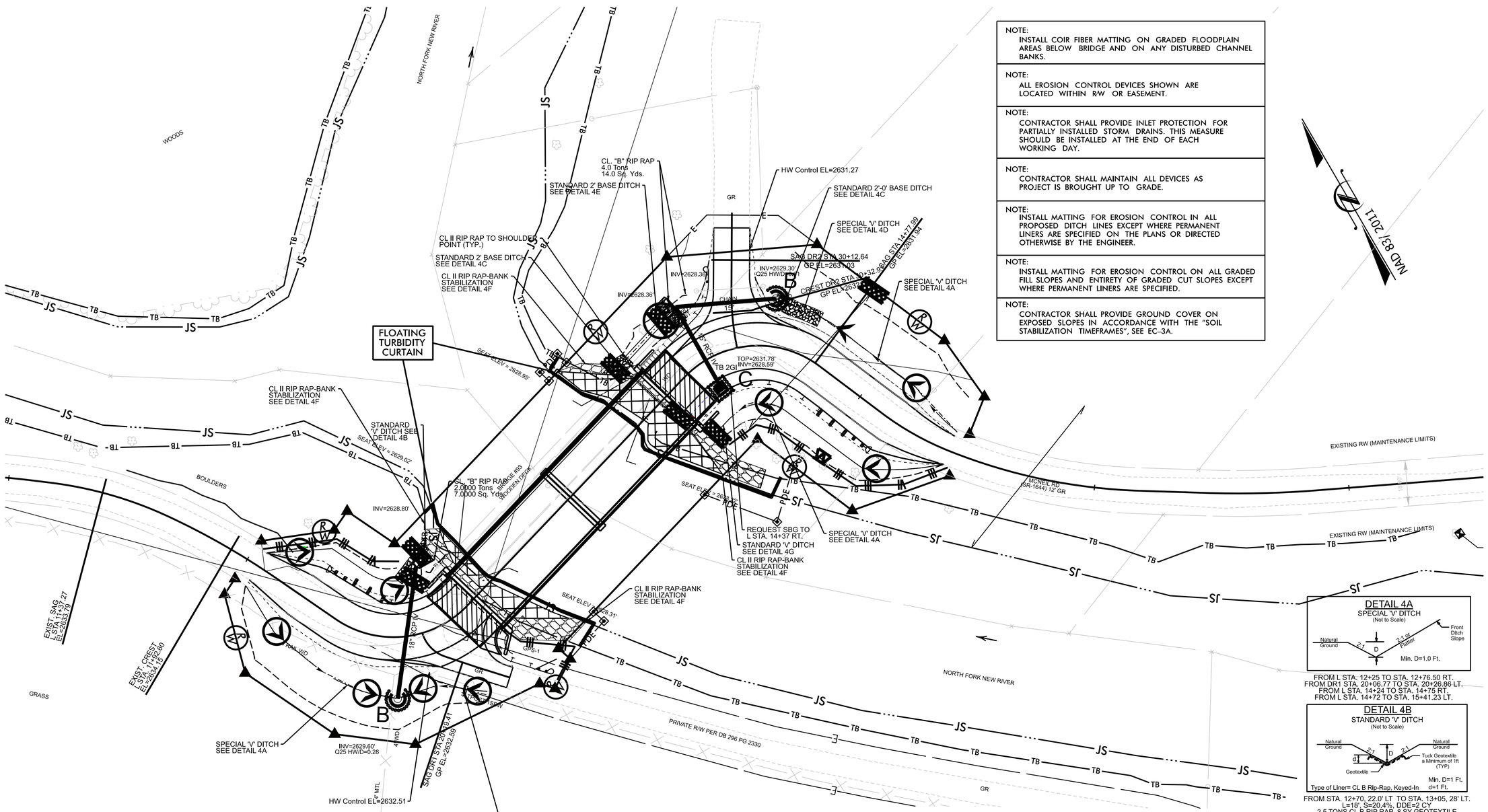

NOTE:
INSTALL COIR FIBER MATTING ON GRADED FLOODPLAIN AREAS BELOW BRIDGE AND ON ANY DISTURBED CHANNEL BANKS.

NOTE:
ALL EROSION CONTROL DEVICES SHOWN ARE LOCATED WITHIN R/W OR EASEMENT.

NOTE:
CONTRACTOR SHALL PROVIDE INLET PROTECTION FOR PARTIALLY INSTALLED STORM DRAINS. THIS MEASURE SHOULD BE INSTALLED AT THE END OF EACH WORKING DAY.

NOTE:
CONTRACTOR SHALL MAINTAIN ALL DEVICES AS PROJECT IS BROUGHT UP TO GRADE.

NOTE:
INSTALL MATTING FOR EROSION CONTROL IN ALL PROPOSED DITCH LINES EXCEPT WHERE PERMANENT LINERS ARE SPECIFIED ON THE PLANS OR DIRECTED OTHERWISE BY THE ENGINEER.

NOTE:
INSTALL MATTING FOR EROSION CONTROL ON ALL GRADED FILL SLOPES AND ENTIRETY OF GRADED CUT SLOPES EXCEPT WHERE PERMANENT LINERS ARE SPECIFIED.

NOTE:
CONTRACTOR SHALL PROVIDE GROUND COVER ON EXPOSED SLOPES IN ACCORDANCE WITH THE "SOIL STABILIZATION TIMEFRAMES", SEE EC-3A.

DETAIL 4A
SPECIAL 'V' DITCH
(Not to Scale)

FROM L STA. 12+25 TO STA. 12+76.50 RT.
FROM DR1 STA. 20+06.77 TO STA. 20+26.86 LT.
FROM L STA. 14+24 TO STA. 14+75 RT.
FROM L STA. 14+72 TO STA. 15+41.23 LT.

DETAIL 4B
STANDARD 'V' DITCH
(Not to Scale)

FROM STA. 12+70, 22.0' LT TO STA. 13+05, 28' LT.
L=18', S=20.4%, DDE=2 CY
2.5 TONS CL B RIP RAP, 8 SY GEOTEXTILE

DETAIL 4C
STANDARD BASE DITCH
(Not to Scale)

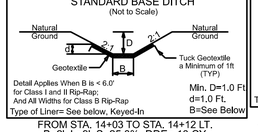

FROM STA. 14+03 TO STA. 14+12 LT.
B=2', L=9', S=25.0%, DDE= 10 CY
5 TONS CL II RIP RAP, 15 SY GEOTEXTILE
FROM STA. 14+59 TO STA. 14+65 LT.
B=0'-2', L=9', S=14.6%, DDE= 16 CY
2.5 TONS CL B RIP RAP, 8 SY GEOTEXTILE

DETAIL 4D
SPECIAL 'V' DITCH
(Not to Scale)

FROM STA. 14+65 TO STA. 14+72 LT.
1.0 TONS CL B RIP RAP, 6 SY GEOTEXTILE

DETAIL 4E
STANDARD BASE DITCH
(Not to Scale)

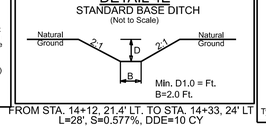

FROM STA. 14+12, 21.4' LT. TO STA. 14+33, 24' LT
L=28', S=0.577%, DDE=10 CY

DETAIL 4F
BANK STABILIZATION
(Not to Scale)

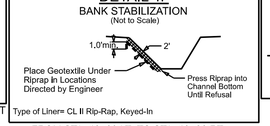

FROM STA. 13+03 LT. TO STA. 13+26 RT.
35 TONS CL II RIP RAP, 46 SY GEOTEXTILE
FROM STA. 13+89 LT. TO STA. 14+18 RT.
33 TONS CL II RIP RAP, 47 SY GEOTEXTILE

DETAIL 4G
STANDARD 'V' DITCH
(Not to Scale)

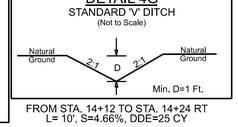

FROM STA. 14+12 TO STA. 14+24 RT
L= 10', S=4.66%, DDE=25 CY

HB-0044
EC-05 | CONST-04

NORTH CAROLINA
DEPARTMENT OF TRANSPORTATION
ASHE COUNTY

ROADSIDE ENVIRONMENTAL UNIT

HYDRAULICS ENGINEER

PREPARED BY

MK ENGINEERING
1011 SCHAUB DRIVE, SUITE 100
RALEIGH, NC 27626
(919) 851-6600
FIRM #: NUMBER C-NA0671

FINAL EROSION CONTROL FOR CONSTRUCTION SHEET 04

REVISIONS

Docusign Envelope ID: 86528B62-0882-828F-83F0-7F5A62674B59

T.I.P.: HB-0044

CONTRACT:

TIP NO.	SHEET NO.
HB-0044	PMP-1

APPROVED: Signed by: Damian J. George 948E6122181340... 7/8/2026

DATE: 6-8-2026

SEAL

NORTH CAROLINA PROFESSIONAL SEAL 061679 ENGINEER DAMIAN J. GEORGE

DOCUMENT NOT CONSIDERED FINAL UNLESS ALL SIGNATURES COMPLETED

STATE OF NORTH CAROLINA
DEPARTMENT OF TRANSPORTATION

PAVEMENT MARKING & SIGNING PLAN
ASHE COUNTY

LOCATION: *REPLACE AND REALIGN BRIDGE NO. 040093 ON SR 1644 (MCNEIL ROAD) OVER NORTH FORK NEW RIVER*

INDEX

SHEET NO.	DESCRIPTION
PMP-1	PAVEMENT MARKING PLAN TITLE AND SCHEDULE SHEET
PMP-2	PAVEMENT MARKING & SIGNING DETAIL

ROADWAY STANDARD DRAWING

THE FOLLOWING ROADWAY STANDARDS AS APPEAR IN "ROADWAY STANDARD DRAWINGS" - CONTRACT STANDARDS AND DEVELOPMENT UNIT - N.C. DEPARTMENT OF TRANSPORTATION - RALEIGH, N.C., DATED JANUARY 2024 ARE APPLICABLE TO THIS PROJECT AND BY REFERENCE HEREBY ARE CONSIDERED A PART OF THESE PLANS:

STD. NO.	TITLE
1205.01	PAVEMENT MARKINGS - LINE TYPES AND OFFSETS
1205.02	PAVEMENT MARKINGS - TWO-LANE AND MULTILANE ROADWAYS
1205.12	PAVEMENT MARKINGS - BRIDGES
1261.01	GUARDRAIL AND BARRIER DELINEATORS - INSTALLATION SPACING
1261.02	GUARDRAIL AND BARRIER DELINEATORS - TYPES AND MOUNTING
1262.01	GUARDRAIL END DELINEATION

PAVEMENT MARKING SCHEDULE

	PAINT(4")
P1	WHITE EDGELINE
P13	YELLOW DOUBLE CENTER

SUMMARY OF QUANTITIES

ITEM NO.		ITEM DESCRIPTION	QUANTITY	UNIT
DESC. NO.	SECT. NO.			
4155000000	907	DISPOSAL OF SIGN SYSTEM, U-CHANNEL	4	EA.

GENERAL NOTES

THE FOLLOWING GENERAL NOTES APPLY AT ALL TIMES FOR THE DURATION OF THE CONSTRUCTION PROJECT, EXCEPT WHEN OTHERWISE NOTED IN THE PLAN, OR DIRECTED BY THE ENGINEER.

A) INSTALL PAVEMENT MARKINGS AND PAVEMENT MARKERS ON THE FINAL SURFACE AS FOLLOWS:

ROAD NAME	MARKING	MARKER
SR 1644	PAINT	NONE

B) TIE PROPOSED PAVEMENT MARKING LINES TO EXISTING PAVEMENT MARKING LINES.

C) REMOVE/REPLACE ANY CONFLICTING/DAMAGED PAVEMENT MARKINGS.

D) PASSING ZONES WILL BE DETERMINED IN THE FIELD AND MUST BE APPROVED BY THE ENGINEER.

E) PLACE TWO APPLICATIONS OF PAINT PAVEMENT MARKINGS ON THE FINAL WEARING SURFACE. PLACE THE SECOND APPLICATION OF PAINT UPON SUFFICIENT DRYING TIME OF THE FIRST.

- IF REMOVAL OR RELOCATION OF SIGNS ON PRIVATE STREET (NON-STATE MAINTAINED) IS REQUIRED DUE TO CONSTRUCTION, THE CONTRACTOR SHALL INFORM THE ENGINEER. THE WORK WILL BE COMPLETED BY OTHERS.
- WHEN NOT STATIONED OR DIMENSIONED ON PLANS, ALL 'E' AND 'F' SIGNS SHALL BE FIELD LOCATED BY THE ENGINEER.
- ALL EXISTING SIGNS ON "U" CHANNEL POST WITHIN THE PROJECT LIMITS SHALL BE REMOVED AND DISPOSED OF UNLESS OTHERWISE NOTED ON PLANS.
- SEE ROADWAY PLANS FOR GUARD/GUIDE RAIL DETAILS.

PROJECT NOTES

1 DISPOSAL OF SIGN SYSTEM, U CHANNEL

PLAN SUBMITTED TO:

Daniel Adams, PE NCDOT Project Design Manager

STATE OF NORTH CAROLINA DEPARTMENT OF TRANSPORTATION

PLAN PREPARED BY: ms consultants, inc.

Damian J. George, PE Project Engineer

Cassidy L. Mengelkamp, EI Project Design Engineer

ms consultants, inc.
5444 Wake Park Blvd.
Suite 160
Raleigh, NC 27607
NC License Number : C-3239

6/18/2026
pw://ncdot-pw.bentley.com:ncdot-pw-01/Documents/Division.11/HB-0044/Signing and Delineation/Pavement Marking/Design/HB-0044_SGN_PMP_Title
User:CMengelkamp

Docusign Envelope ID: 86528B62-0882-828F-83F0-7F5A62674B59

TIP NO.	SHEET NO.
HB-0044	PMP-2

APPROVED: Signed by: Damian J. George 7/8/2026
94BE612218134C2...

DATE: 6-8-2026

SEAL

NORTH CAROLINA PROFESSIONAL SEAL 061679 ENGINEER DAMIAN J. GEORGE

DOCUMENT NOT CONSIDERED FINAL UNLESS ALL SIGNATURES COMPLETED

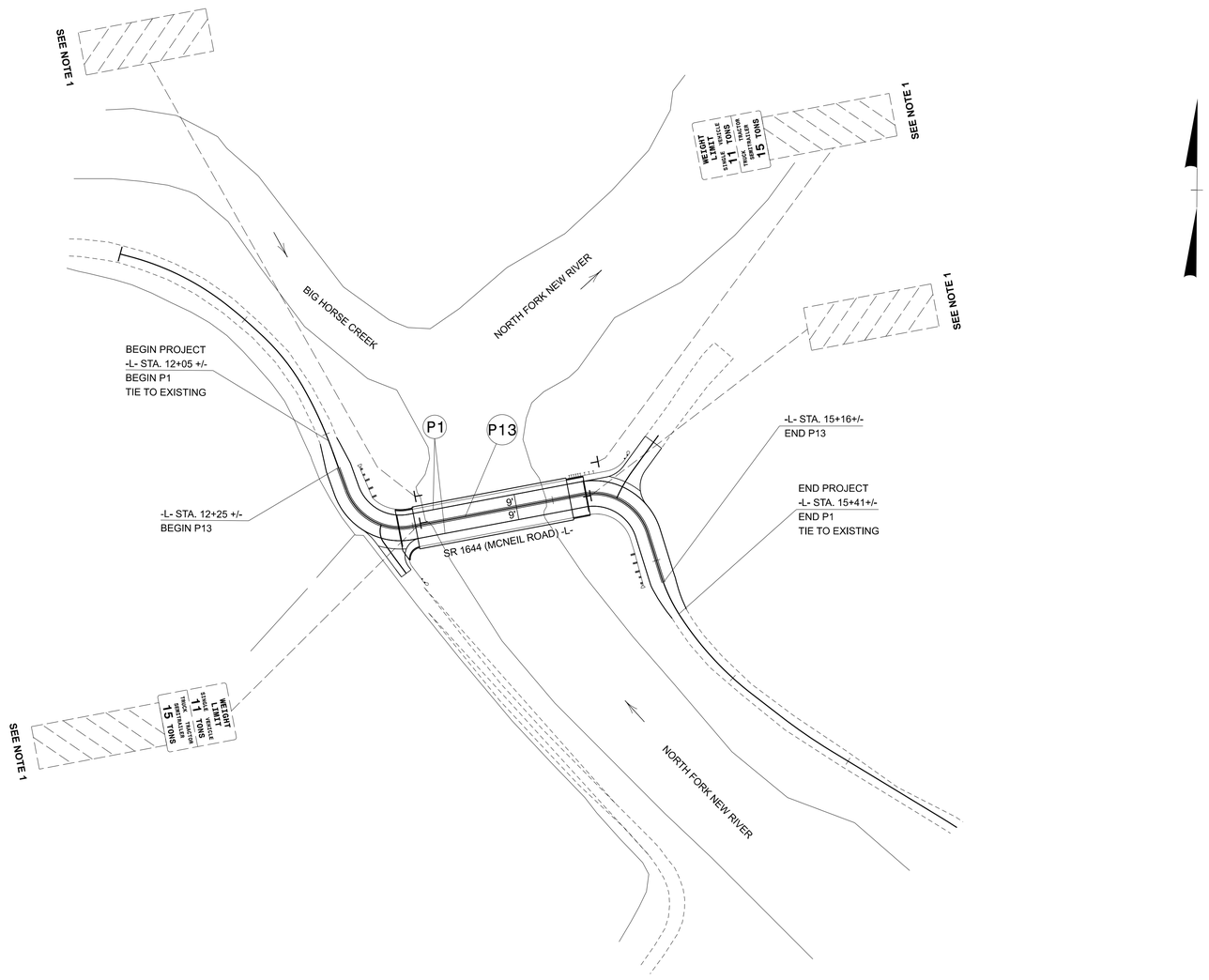

FINAL PAVEMENT MARKINGS & SIGNING

6/8/2026
pw://ncdot-pw.bentley.com:ncdot-pw-01/Documents/Division_11/HB-0044/Signing and Delineation/Pavement Marking/Design/HB-0044_SGN_PMP_1.dgn
User:CMengelkamp

PROJ. REFERENCE NO.	SHEET NO.
HB-0044	X-1

CROSS SECTION INDEX

X-1	CROSS SECTION INDEX
X-1A	CROSS SECTION SUMMARY
X-2 THRU X-5	-L- SECTIONS
X-6 THRU X-7	-DR1- SECTIONS
X-8 THRU X-9	-DR2- SECTIONS

PROJ. REFERENCE NO.	SHEET NO.
HB-0044	X-1A

STATE OF NORTH CAROLINA

CROSS-SECTION SUMMARY

Approximate quantities only. Unclassified excavation, borrow excavation, fine grading, clearing and grubbing, and removal of existing pavement will be paid for at the lump sum price for

NOTE: EMBANKMENT COLUMN DOES NOT INCLUDE BACKFILL FOR UNDERCUT

Station L	Uncl. Exc. (cu. yd.)	Embt (cu. yd.)
12+05.00	0	0
12+25.00	37	0
12+50.00	94	0
12+75.00	89	4
13+00.00	8	19
13+00.81	0	3

Station DR1	Uncl. Exc. (cu. yd.)	Embt (cu. yd.)
20+00.00	0	0
20+25.00	31	0
20+40.02	40	0

Station L	Uncl. Exc. (cu. yd.)	Embt (cu. yd.)
14+13.19	0	0
14+25.00	2	19
14+50.00	28	13
14+75.00	48	8
15+00.00	113	1
15+25.00	108	0
15+41.00	27	0

Station DR2	Uncl. Exc. (cu. yd.)	Embt (cu. yd.)
30+00.00	0	0
30+25.00	10	2
30+47.24	0	26

DOCUMENT NOT CONSIDERED FINAL
UNLESS ALL SIGNATURES COMPLETED

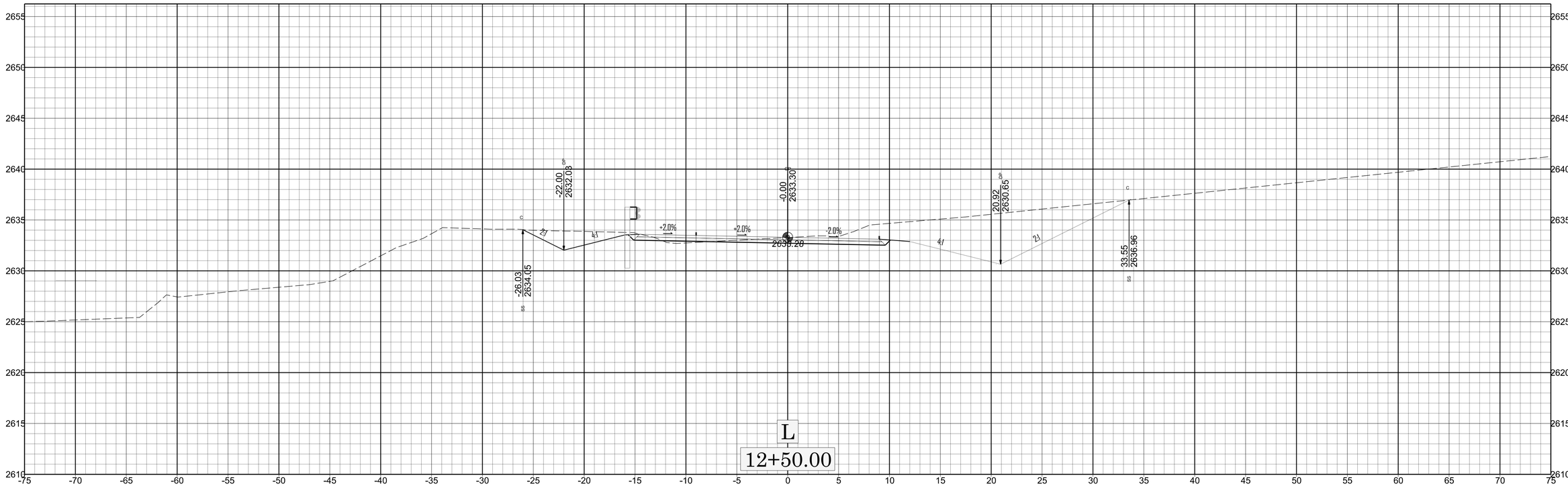

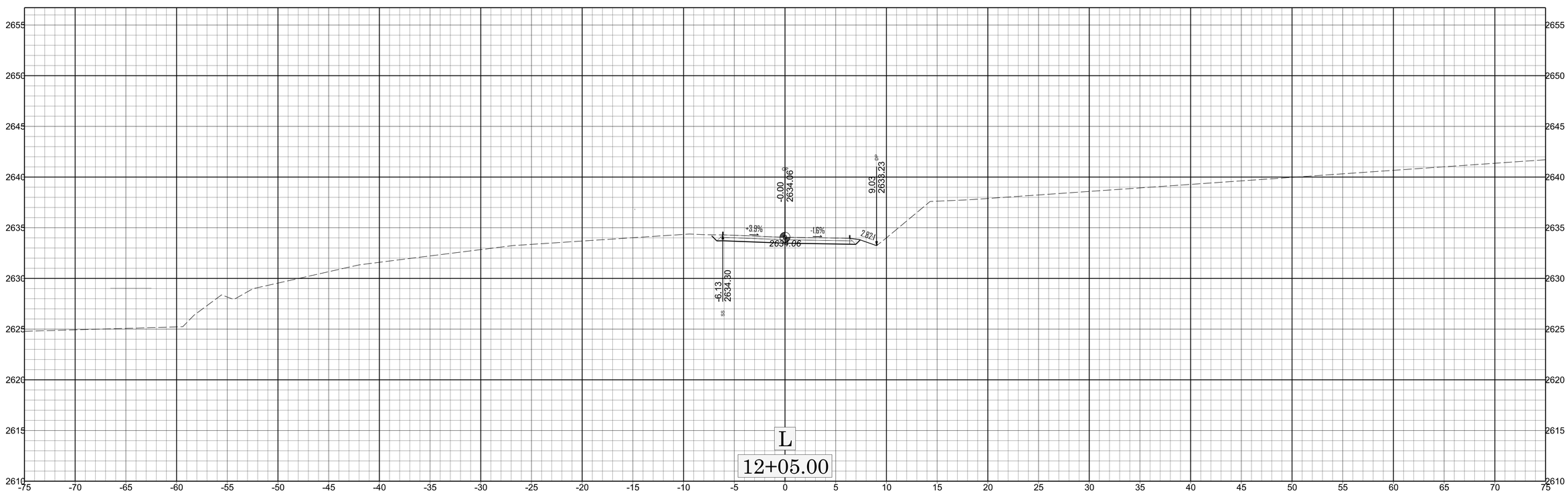

X 2

HB-0044

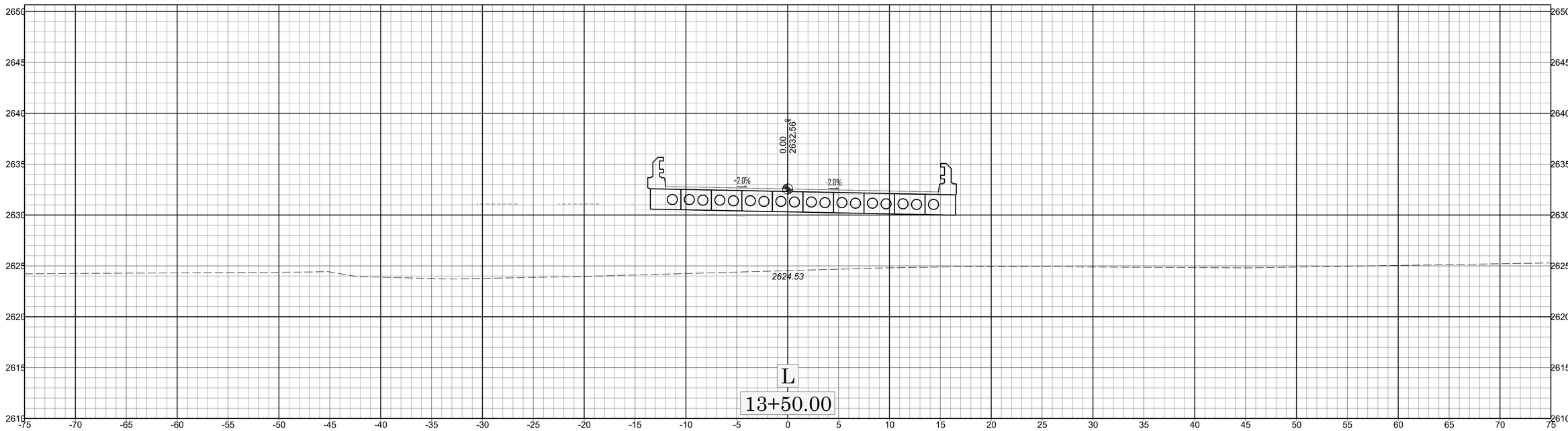
0.00
2632.56
+2.0%
-2.0%
2624.53
L
13+50.00

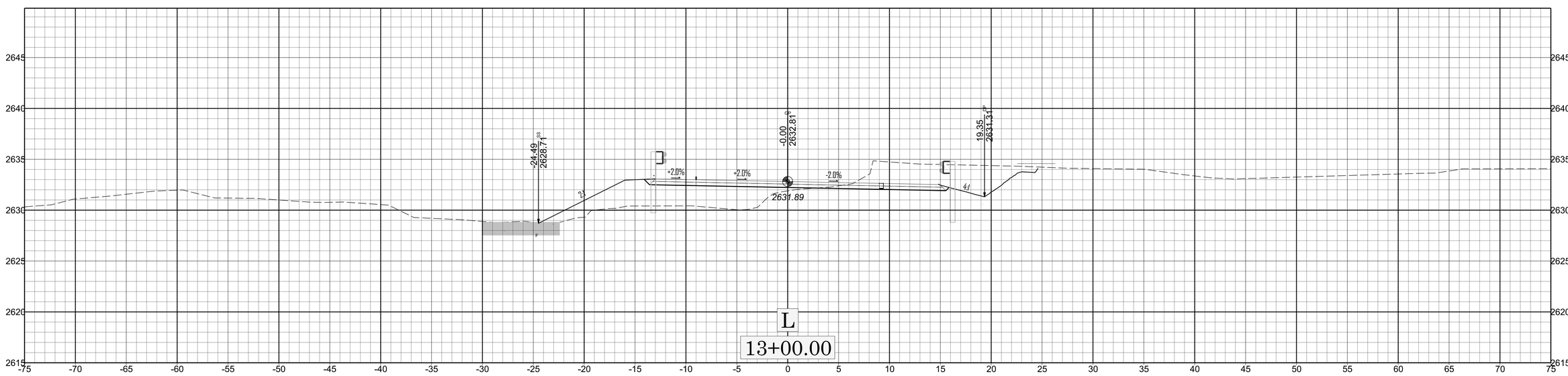
-24.49
2628.71
-0.00
2632.81
19.35
2631.31
+2.0%
+2.0%
-2.0%
2.1
4.1
2631.89
L
13+00.00

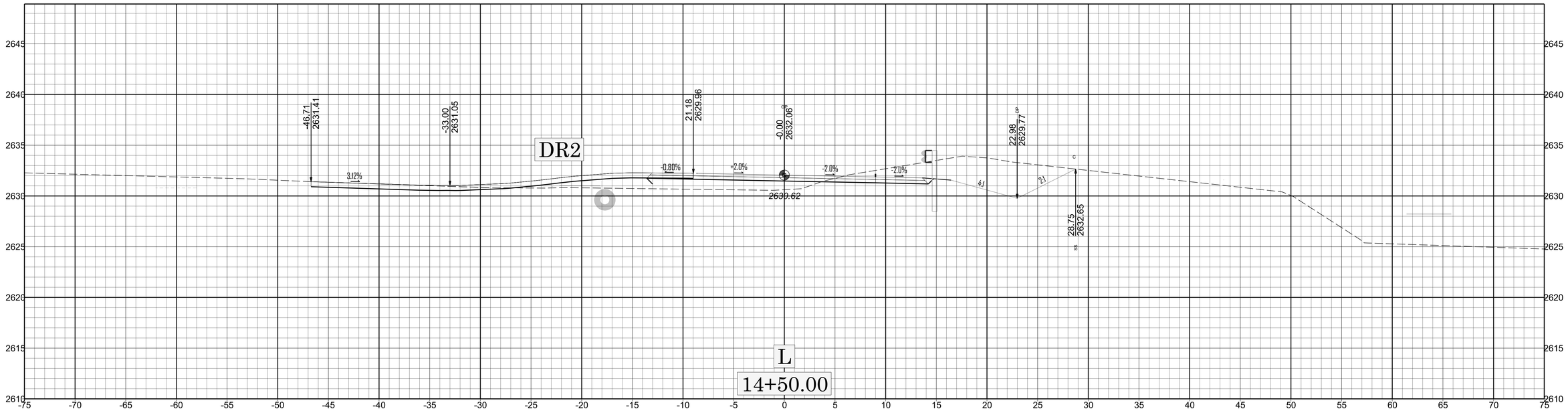
DR2
-46.71
2631.41
-33.00
2631.05
21.18
2629.96
-0.00
2632.06
22.98
2629.77
28.75
2632.65
3.12%
-0.80%
+2.0%
-2.0%
-2.0%
4:1
2:1
2630.62
L
14+50.00

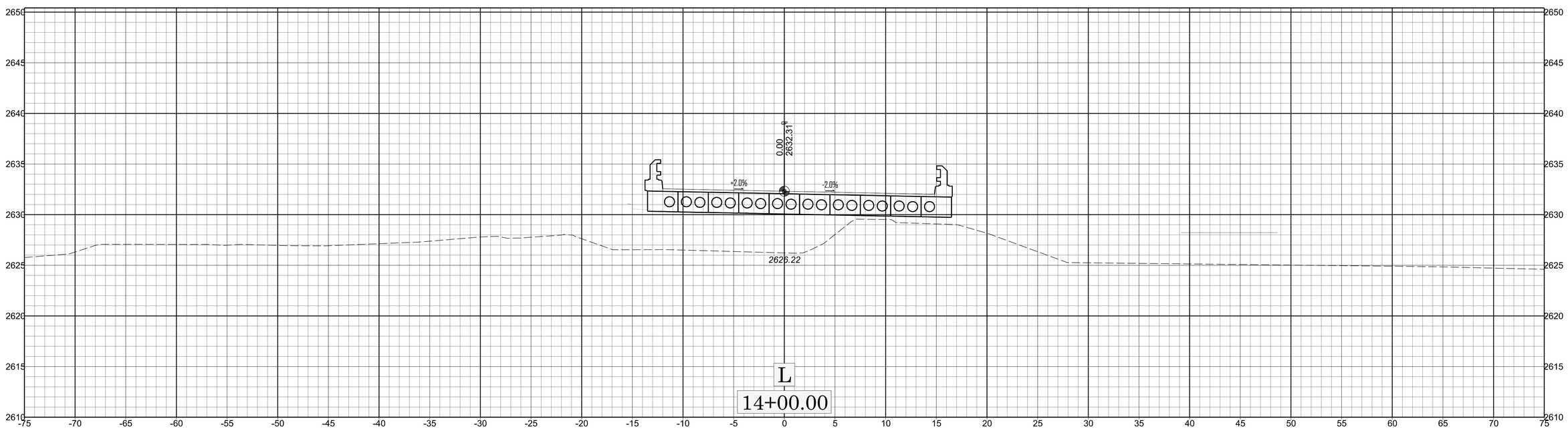
0.00
2632.31
+2.0%
-2.0%
2626.22
L
14+00.00

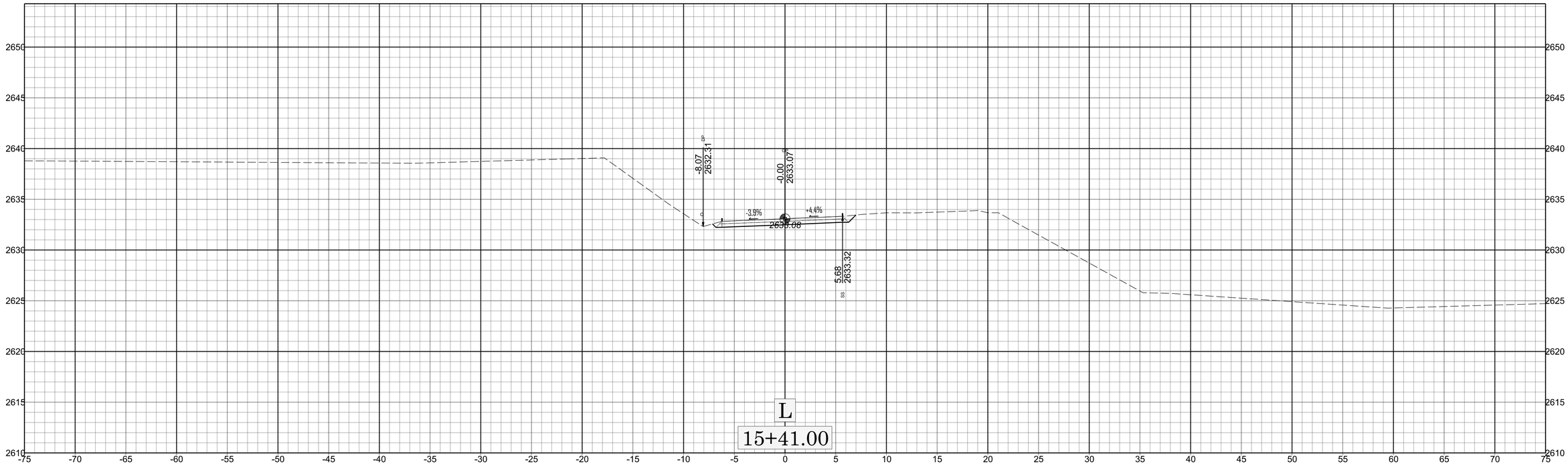
-8.07
2632.31
-0.00
2633.07
-3.9%
+4.4%
2633.08
5.68
2633.32
L
15+41.00

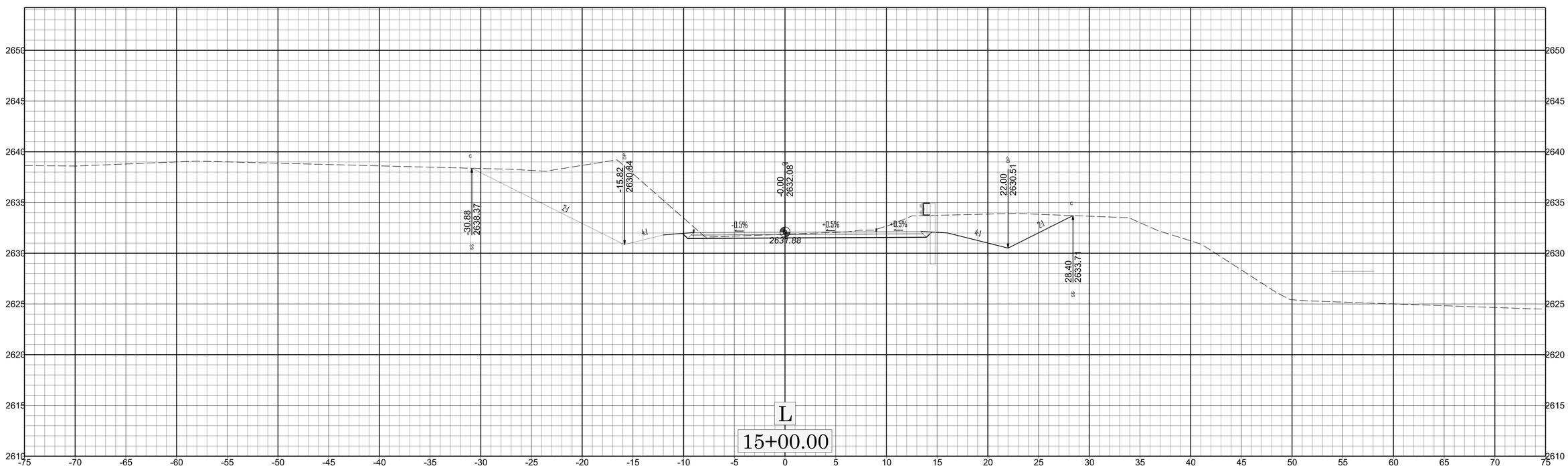
-30.88
2636.37
-15.82
2630.84
-0.00
2632.08
22.00
2630.51
28.40
2633.71
-0.5%
+0.5%
-0.5%
2631.88
L
15+00.00

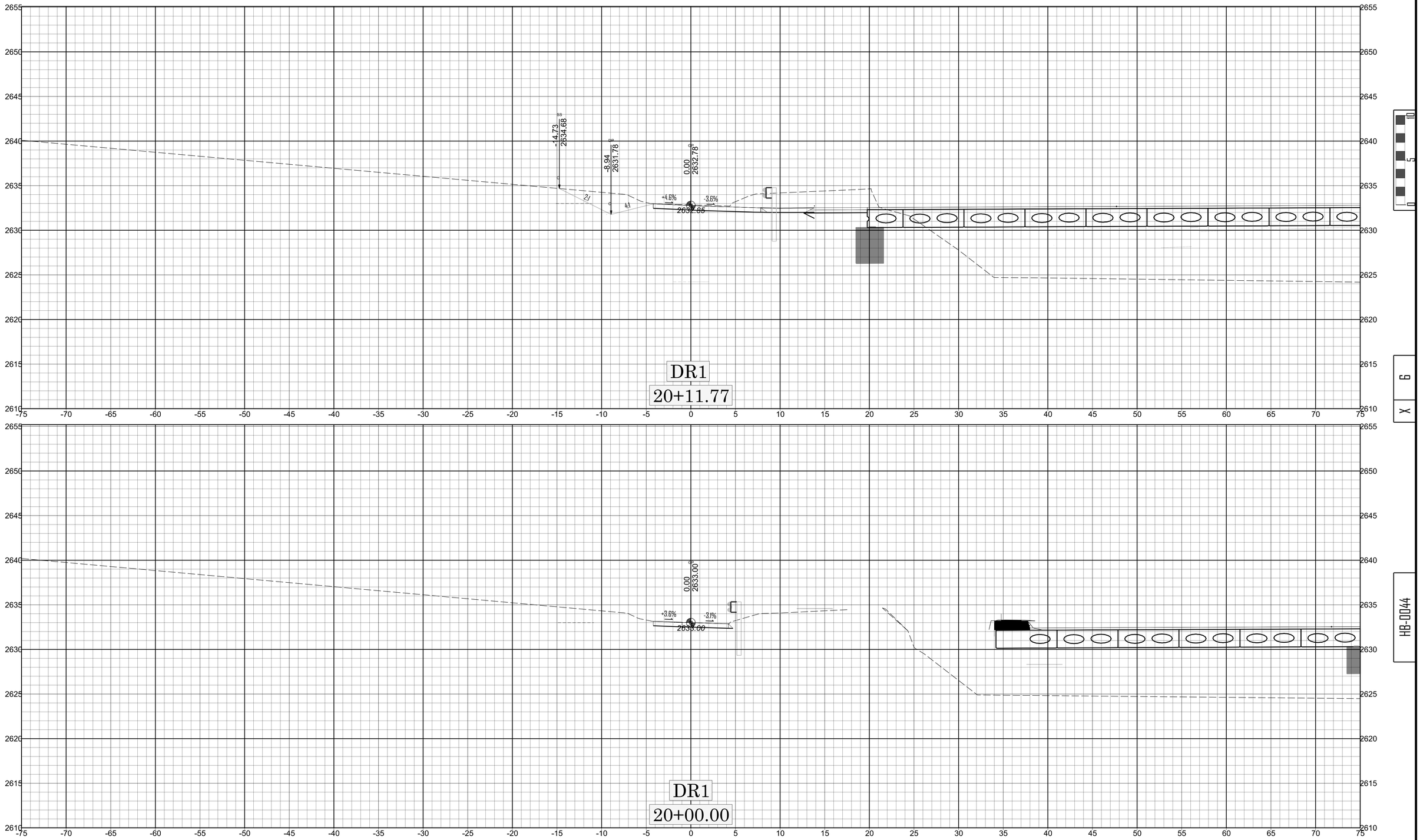
-14.73
2634.68
-8.94
2631.78
0.00
2632.78
+4.6%
-3.6%
2632.85
2:1
4:1
DR1
20+11.77
0.00
2633.00
+3.6%
-3.1%
2633.00
DR1
20+00.00
0
5
10
X
Y
HB-0044

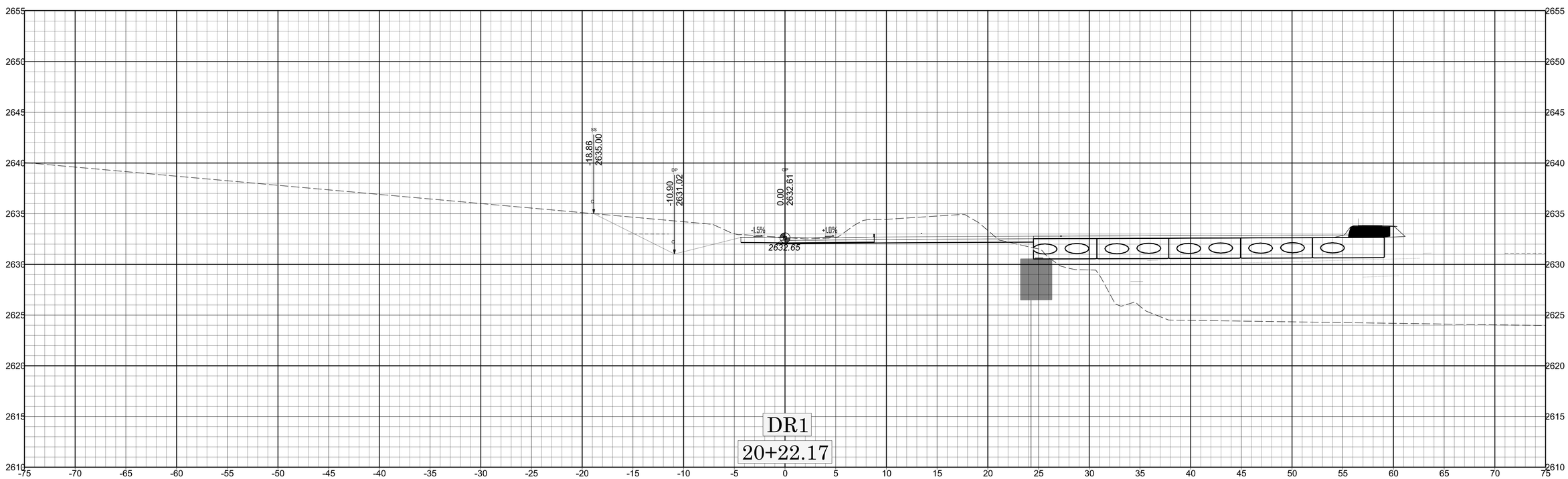
2655
2650
2645
2640
2635
2630
2625
2620
2615
2610
-75 -70 -65 -60 -55 -50 -45 -40 -35 -30 -25 -20 -15 -10 -5 0 5 10 15 20 25 30 35 40 45 50 55 60 65 70 75
SS
-18.86
2635.00
BP
-10.90
2631.02
GP
0.00
2632.61
-1.5%
+1.0%
2632.65
DR1
20+22.17

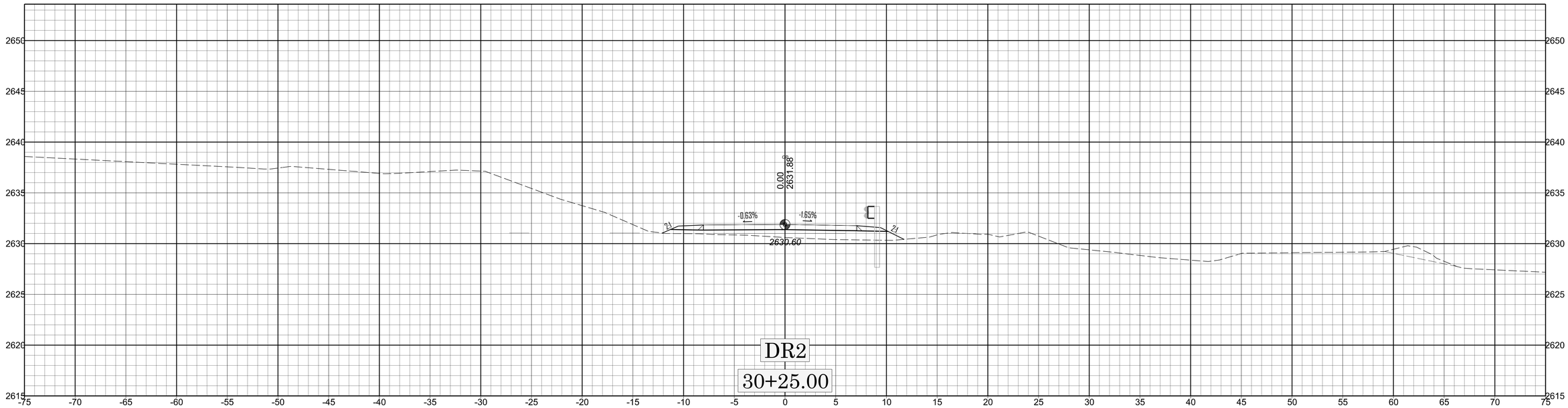
2650
2645
2640
2635
2630
2625
2620
2615
-75 -70 -65 -60 -55 -50 -45 -40 -35 -30 -25 -20 -15 -10 -5 0 5 10 15 20 25 30 35 40 45 50 55 60 65 70 75
0.00
2631.88
-0.63%
-1.65%
2:1
2:1
2630.60
DR2
30+25.00

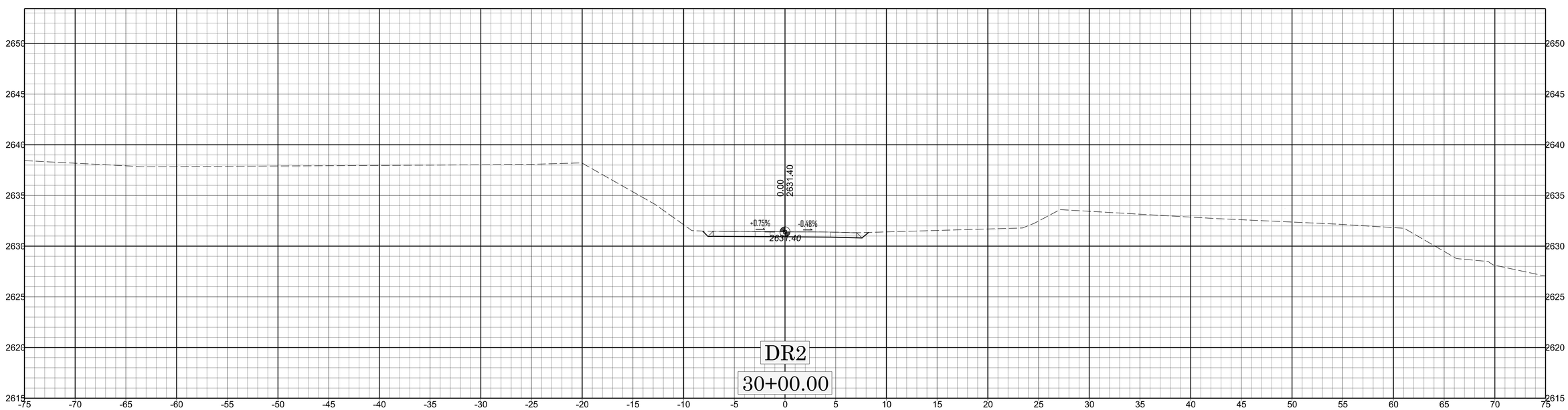
2650
2645
2640
2635
2630
2625
2620
2615
-75 -70 -65 -60 -55 -50 -45 -40 -35 -30 -25 -20 -15 -10 -5 0 5 10 15 20 25 30 35 40 45 50 55 60 65 70 75
0.00
2631.40
+0.75%
-0.48%
2631.40
DR2
30+00.00

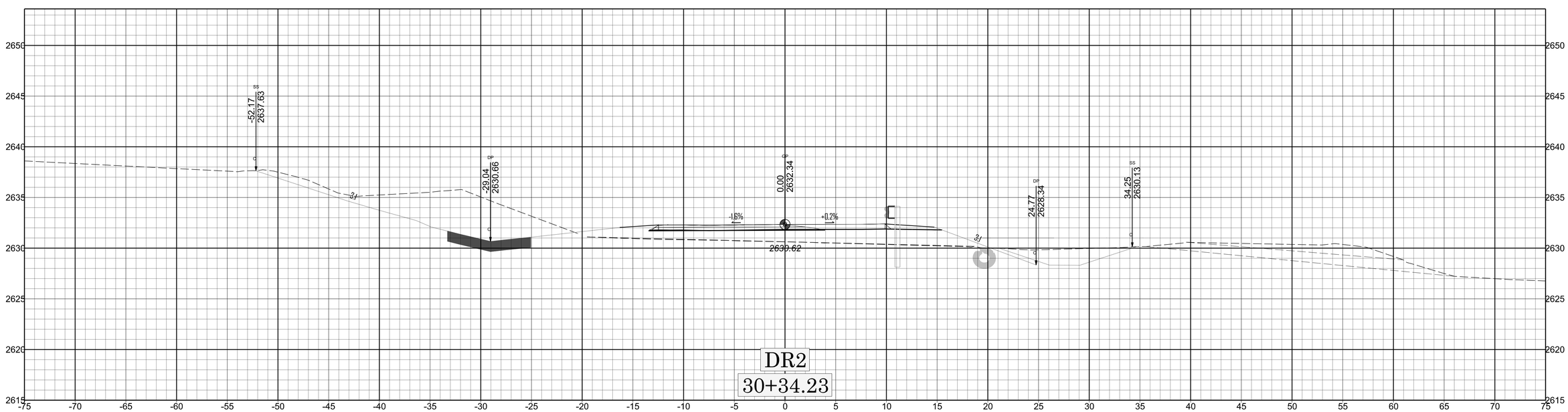
SS
-52.17
2637.63
DP
-29.04
2630.66
GP
0.00
2632.34
DP
24.77
2628.34
SS
34.25
2630.13
-1.5%
+0.2%
2630.62
3:1
3:1
DR2
30+34.23

TIP PROJECT: HB–0044

CONTRACT: DK00482

STATE	STATE PROJECT REFERENCE NO.	SHEET NO.	TOTAL SHEETS
N.C.	HB–0044	0	24

STATE PROJ. NO.	F. A. PROJ. NO.	DESCRIPTION
50714.1.1	FBRG111	P.E.
50714.2.1	FBRG111	R / W
50714.2.2	FBRG111	UTILITIES
50714.3.1	FBRG111	CONST.

STATE OF NORTH CAROLINA
DIVISION OF HIGHWAYS

ASHE COUNTY

LOCATION: REPLACE BRIDGE NO. 040093 ON SR 1644 (MCNEIL ROAD) OVER NORTH FORK NEW RIVER

TYPE OF WORK: GRADING, PAVING, STRUCTURE AND DRAINAGE

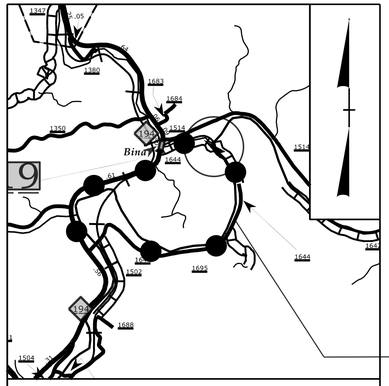

VICINITY MAP (NTS)
OFFSITE DETOUR ROUTE

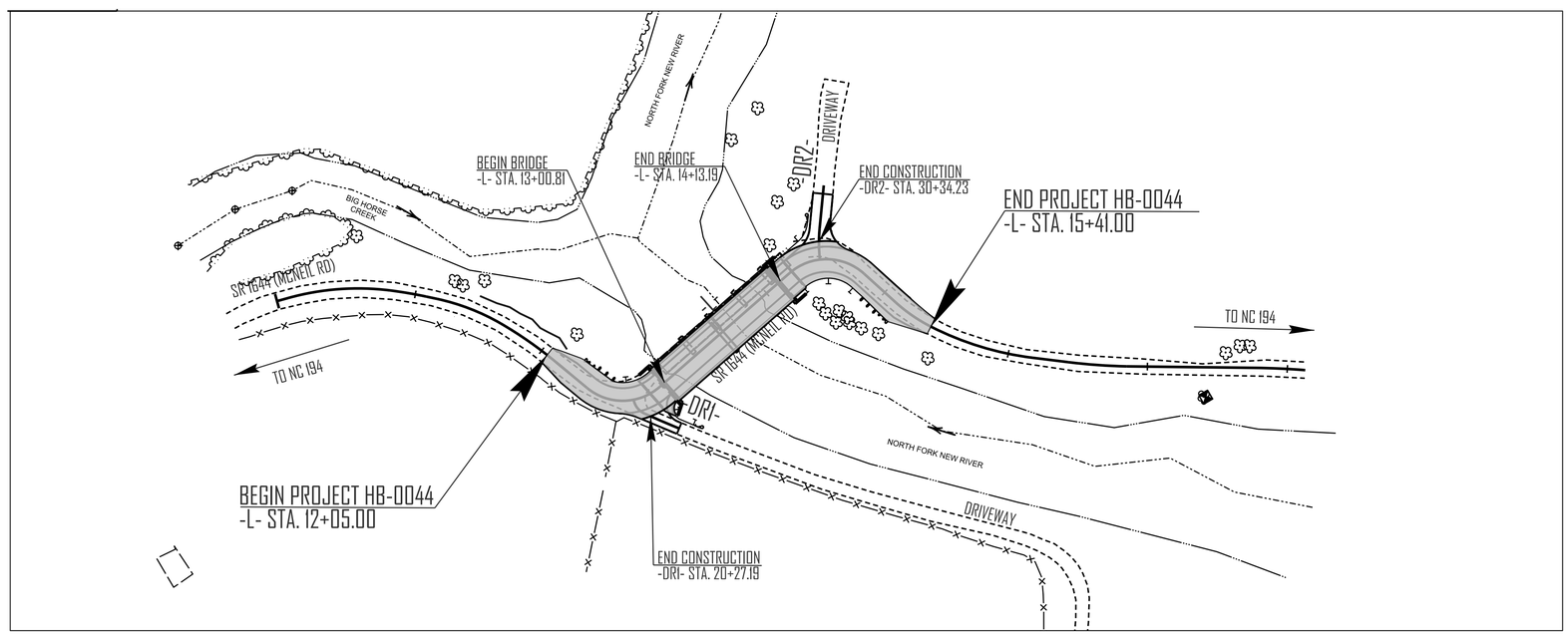

STRUCTURES

DESIGN DATA

ADT (2025) = 170
ADT (2045) = 253
T = 3 %
V = 15 MPH

TTST = 1% DUAL = 2%
FUNC CLASS = RURAL LOCAL

SUBREGIONAL TIER

PROJECT LENGTH

LENGTH ROADWAY STATE PROJECT HB–0044 = 0.043 MILES
LENGTH STRUCTURE PROJECT HB–0044 = 0.021 MILES

TOTAL LENGTH STATE PROJECT HB–0044 = 0.064 MILES

Prepared for:
DIVISION OF HIGHWAYS
DIVISION 11
801 STATESVILLE RD.
NORTH WILKESBORO NC, 28659

2024 STANDARD SPECIFICATIONS

LETTING DATE :

SEPTEMBER 17, 2026

RAMIE SHAW
PROJECT ENGINEER

JEFFREY KEPICH
PROJECT DESIGN ENGINEER

Docusign Envelope ID: 99D11E6B-EAE6-8D75-8060-39096869B815

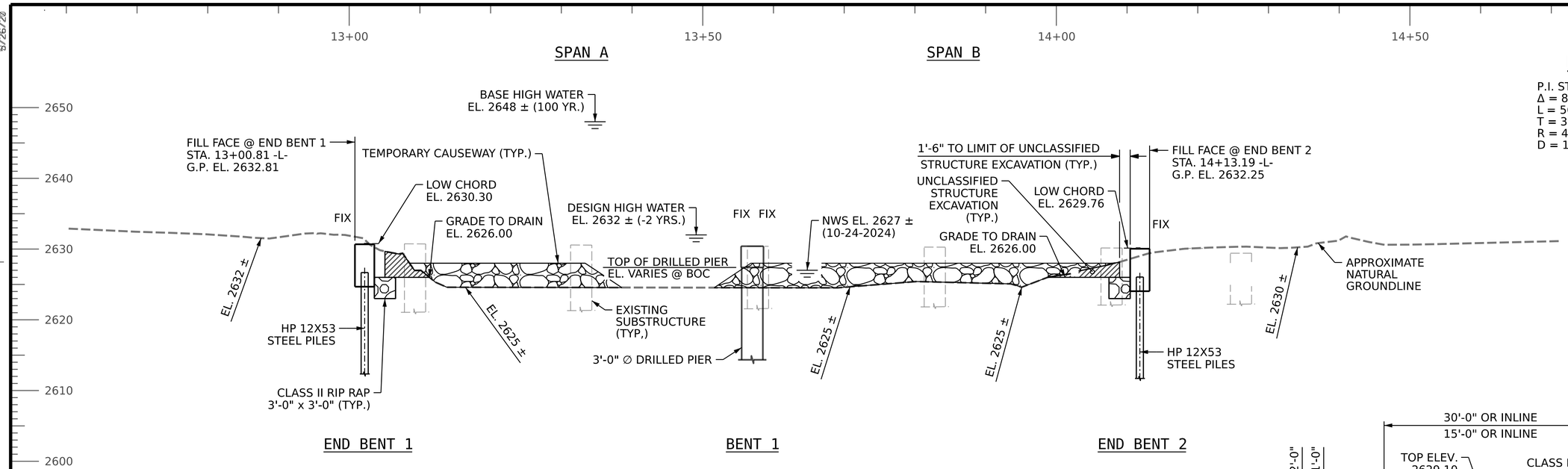

SECTION ALONG -L-

HORIZONTAL CURVE DATA -L-

P.I. STA. = 12+76.04 -L-	P.I. STA. = 14+57.53 -L-
Δ = 80° 58' 56.40" (LT)	Δ = 83° 27' 25.90" (RT)
L = 56.54'	L= 58.26'
T = 34.15'	T = 35.67'
R = 40.00'	R = 40.000'
D = 143° 14' 22"	D = 143° 14' 22"

-1.7158% △ -0.5000%

GRADE DATA

P.I. STA. = 12+68.42 -L-
ELEV. = 2632.97
V.C. = 60.00'

-0.5000% △ 3.0247%

GRADE DATA

P.I. STA. = 14+99.47 -L-
ELEV. = 2631.81
V.C. = 60.00'

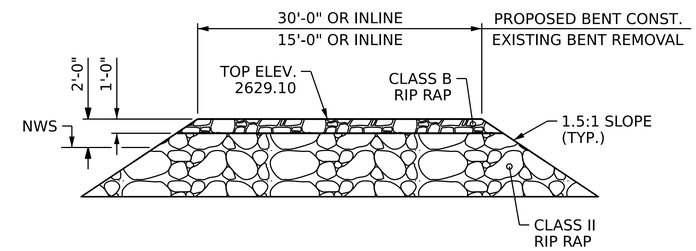

TEMPORARY CAUSEWAY DETAIL

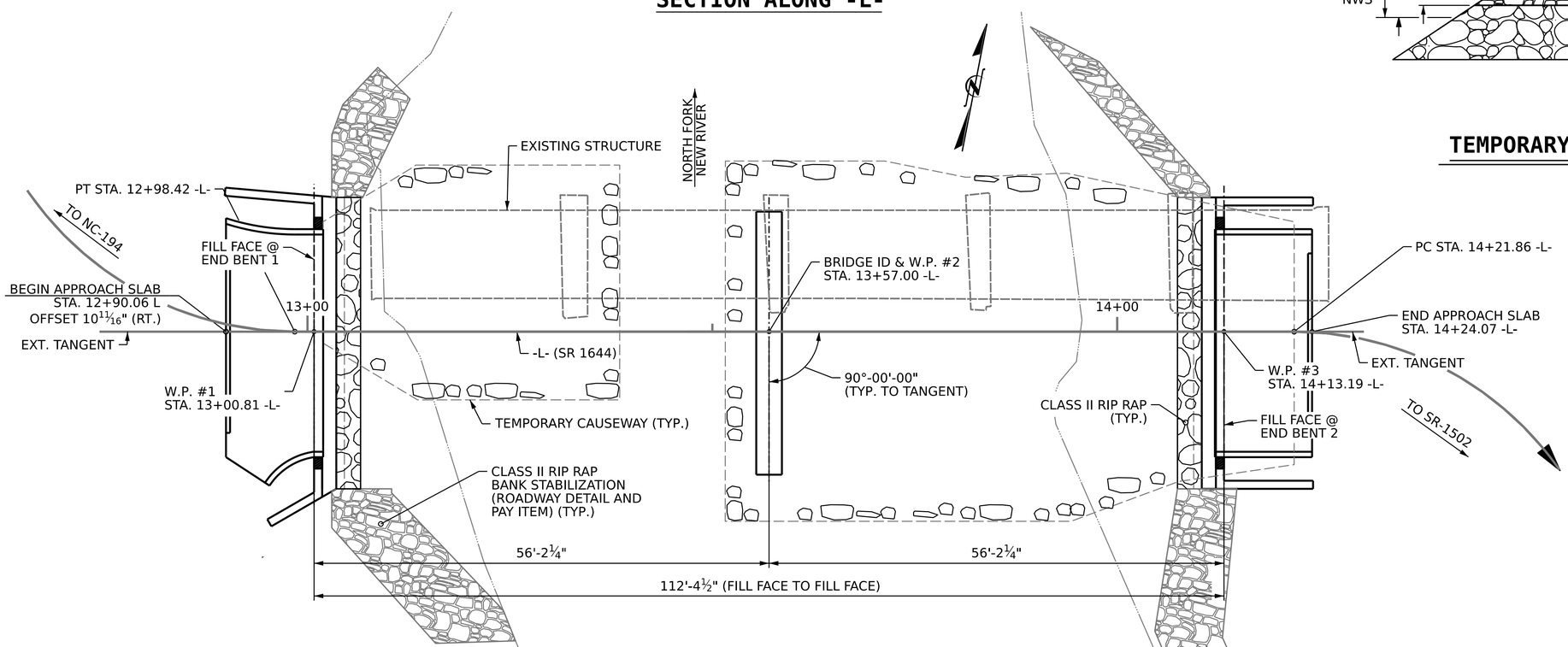

PLAN ALONG -L-

PILES & DRILLED SHAFTS
NOT SHOWN FOR CLARITY

I HEREBY CERTIFY THESE PLANS
ARE THE AS-BUILT PLANS

PROJECT NO. HB-0044
ASHE COUNTY
STATION: 13+57.00 -L-

SHEET 1 OF 5 REPLACE BRIDGE 040093

STATE OF NORTH CAROLINA
DEPARTMENT OF TRANSPORTATION
RALEIGH

GENERAL DRAWING

FOR BRIDGE ON SR 1644
OVER NORTH FORK NEW RIVER
BETWEEN NC-194 & SR 1502

NORTH CAROLINA PROFESSIONAL SEAL 037903 ENGINEER JEFFREY M KEPICH

Signed by: Jeffrey Kepich 7C5C71DBEF914E3... 6/12/2026

ms consultants, inc.
5444 Wade Park Blvd.
Suite 160
Raleigh, NC 27607
NC License Number : C-3239

DOCUMENT NOT CONSIDERED
FINAL UNLESS ALL
SIGNATURES COMPLETED

REVISIONS								SHEET NO.
NO.	BY:	DATE:	NO.	BY:	DATE:			S1-01
1			3					TOTAL SHEETS
2			4					24

DRAWN BY :	J. KEPICH	DATE :	01/26
CHECKED BY :	J. PAPCIAK	DATE :	01/26
DESIGN ENGINEER OF RECORD:	J. KEPICH	DATE :	01/26

5/15/2026
c:\workdir\ncdot-pw.bentley.com_ncdot-pw-01\jeffrey kepich\d0529501\401_001_HB-0044_SMU_GD_S1-01_040093.dgn
jkepich

Docusign Envelope ID: 99D11E6B-EAE6-8D75-8060-39096869B815

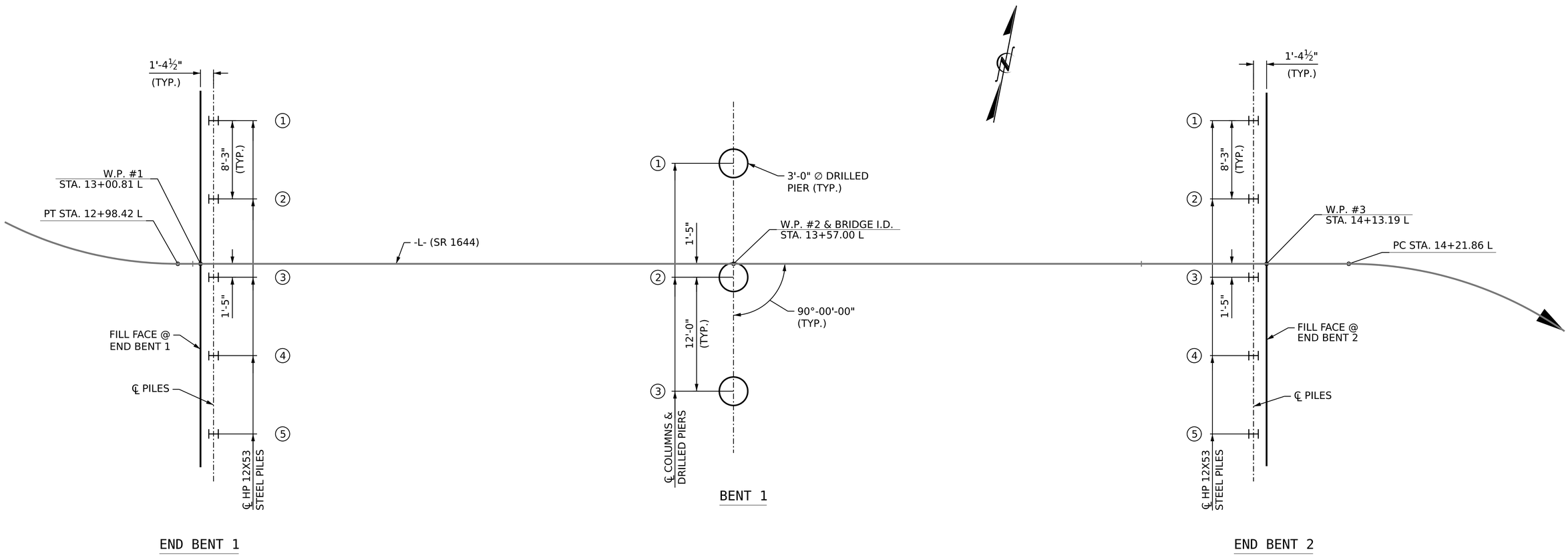

FOUNDATION LAYOUT

NOTES

FOR PILES, SEE SECTION 450 OF THE STANDARD SPECIFICATIONS.

FOR DRILLED PIERS, SEE SECTION 411 OF THE STANDARD SPECIFICATIONS.

PILE EXCAVATION FOR END NOS. 1 AND 2 WILL EXTEND A MINIMUM OF 10 FT BELOW BOTTOM OF CAP OR WITH A MINIMUM PENETRATION OF 5 FT INTO ROCK, WHICHEVER COMES FIRST. ROCK IS DEFINED BY SECTION 411 OF THE STANDARD SPECIFICATIONS.

FILL HOLES FOR PILE EXCAVATION AT BENT NOS. 1 AND 2 WITH CONCRETE.

PROJECT NO. HB-0044
ASHE COUNTY
STATION: 13+57.00 -L-

SHEET 2 OF 5

STATE OF NORTH CAROLINA
DEPARTMENT OF TRANSPORTATION
RALEIGH

FOUNDATION LAYOUT

NORTH CAROLINA PROFESSIONAL SEAL 037903 ENGINEER JEFFREY M KEPICH

Signed by: Jeffrey Kepich 7C5C71DBEF914E3... 6/12/2026

ms consultants, inc.
5444 Wade Park Blvd.
Suite 160
Raleigh, NC 27607
NC License Number : C-3239

DOCUMENT NOT CONSIDERED FINAL UNLESS ALL SIGNATURES COMPLETED

REVISIONS						SHEET NO.
NO.	BY:	DATE:	NO.	BY:	DATE:	S1-02
1			3			TOTAL SHEETS
2			4			24

DRAWN BY :	J. KEPICH	DATE :	01/26
CHECKED BY :	J. PAPCIAK	DATE :	01/26
DESIGN ENGINEER OF RECORD:	J. KEPICH	DATE :	01/26

5/15/2026
c:\workdir\ncdot-pw.bentley.com_ncdot-pw-01\jeffrey kepich\d0529501\401_003_HB-0044_SMU_FL_S1-02_040093.dgn
jkepich

8/26/21

Docusign Envelope ID: 99D11E6B-EAE6-8D75-8060-39096869B815

8/26/21

SUMMARY OF PILE INFORMATION/INSTALLATION

(Blank entries indicate item is not applicable to structure)

End Bent / Bent No, Pile(s) #(-#) (e.g., "Bent 1, Piles 1-5")	Number of Piles per Line	Factored Resistance per Pile KIPS	Pile Cut-Off (Top of Pile) Elevation FT	Estimated Pile Length per Pile FT	Scour Critical Elevation FT	Driven Piles			Predrilling for Piles **			Drilled-In Piles		
						Minimum Pile Tip (Tip No Higher Than) Elevation FT	Required Driving Resistance (RDR)* per pile KIPS	Pile Redrives Quantity EACH	Predrilling Length per Pile LIN FT	Predrilling Elevation (Elevation Not To Predrill Below) FT	Maximum Predrilling Diameter INCHES	Pile Excavation (Bottom of Hole) Elevation FT	Pile Excavation Not In Soil per Pile LIN FT	Pile Excavation In Soil per Pile LIN FT
End Bent No. 1	5	175		15								2616	5	3
End Bent No. 2	5	175		15								2616	5	3
TOTAL QUANTITY:													50	30

$$^{*}\,RDR = \frac{Factored\ Resistance\ + Factored\ Drag\ Load\ +\ Factored\ Dead\ Load}{Dynamic\ Resistance\ Factor} + Nominal\ Drag\ Load\ Resistance +\ Nominal\ Resistance\ from\ Scourable\ Material$$

** Predrilling for Piles is required for end bents/bents with a predrilling length and at the Contractor's option for end bents/bents with predrilling information but no predrilling length.

PILE DESIGN INFORMATION

(Blank entries indicate item is not applicable to structure)

End Bent / Bent No, Pile(s) #(-#) (e.g., "Bent 1, Piles 1-5")	Factored Axial Load per Pile KIPS	Factored Drag Load per Pile KIPS	Factored Dead Load * per Pile KIPS	Dynamic Resistance Factor	Nominal Drag Resistance per Pile KIPS	Nominal Scour Resistance per Pile KIPS
End Bent No. 1	175					
End Bent No. 2	175					

* Factored Dead Load is factored weight of pile above the ground line.

SUMMARY OF DRILLED PIER INFORMATION/INSTALLATION

(Blank entries indicate item is not applicable to structure)

End Bent / Bent No, Pier(s) #(-#) (e.g., "Bent 1, Piers 1-3")	Number of Piers per Line	Factored Resistance per Pier KIPS	Required Drilled Pier Tip Elevation FT	Required Tip Resistance per Pier KSF	Scour Critical Elevation FT	Minimum Drilled Pier Penetration Into Rock per Pier LIN FT	Drilled Pier Length* per Pier LIN FT	Drilled Pier Length Not In Soil* per Pier LIN FT	Drilled Pier Length In Soil* per Pier LIN FT	Permanent Steel Casing Required? YES	Permanent Steel Casing Tip Elevation (Elevation Not To Extend Casing Below) FT	Permanent Steel Casing Length** per Pier LIN FT
Bent No. 1 (Pier 1)	1	680	2614.00	20	2619.00	6	13.3			YES	2620.00	7.3
Bent No. 1 (Piers 2-3)	2	680	2610.00	20	2619.00	10	17.3			YES	2620.00	7.3
TOTAL QUANTITY:							47.9					21.9

* Drilled Pier Length, Drilled Pier Length Not in Soil and Drilled Pier Length in Soil represent estimated drilled pier quantities and are measured and paid for as either "____ Dia. Drilled Piers" or "____ Dia. Drilled Piers Not in Soil" and "____ Dia. Drilled Piers in Soil" in accordance with Article 411-7 of the NCDOT Standard Specifications. For bents with a not in soil pay item, drilled piers through air or water will be paid at the contract unit price for "__Dia. Drilled Piers in Soil."

** Permanent Steel Casing Length equals the difference between the ground line or top of drilled pier elevation, whichever is higher, and the permanent casing tip elevation and is measured and paid for as "Permanent Steel Casing for ____ Dia. Drilled Pier" in accordance with Article 411-7 of the NCDOT Standard Specifications.

SUMMARY OF DRILLED PIER TESTING

(Blank entries indicate item is not applicable to structure)

End Bent / Bent No, Pier(s) #(-#) (e.g., "Bent 1, Piers 1-3")	Standard Penetration Test (SPT) EACH	Crosshole Sonic Logging (CSL) EACH	Thermal Integrity Profiler (TIP) EACH	Shaft Inspection Device (SID) EACH	Pile Integrity Test (PIT) EACH
Bent No. 1		1			
TOTAL QUANTITY:		1			

PROJECT NO. HB-0044

ASHE COUNTY

STATION: 13+57.00 -L-

SHEET 3 OF 5

NOTES:

1. The Pile Foundation Tables are based on the bridge substructure design and foundation recommendations sealed by a North Carolina Professional Engineer (Michael H. Stephens, #028893) on 01-22-2026.
2. Total Pile Driving Equipment Setup quantity (not shown in Pile Foundation Tables) equals the number of driven piles, i.e., the number of piles with a Required Driving Resistance.
3. The Engineer may adjust the quantity for DPT Testing, Pipe Pile Plates, Permanent Steel Casing, SPTs, TIPs, CSL Testing, SID Inspections and PITs when necessary.

NORTH CAROLINA PROFESSIONAL SEAL 037903 ENGINEER JEFFREY M KEPICH

Signed by: Jeffrey Kepich 7C5C71DBEF914E3...

6/12/2026

ms consultants, inc.
5444 Wade Park Blvd.
Suite 160
Raleigh, NC 27607
NC License Number : C-3239

DOCUMENT NOT CONSIDERED FINAL UNLESS ALL SIGNATURES COMPLETED

STATE OF NORTH CAROLINA
DEPARTMENT OF TRANSPORTATION
RALEIGH

PILE AND DRILLED PIER FOUNDATION TABLES

REVISIONS						SHEET NO.
NO.	BY:	DATE:	NO.	BY:	DATE:	S1-03
1			3			TOTAL SHEETS
2			4			24

DRAWN BY :	J. KEPICH	DATE :	01/26
CHECKED BY :	J. PAPCIAK	DATE :	01/26
DESIGN ENGINEER OF RECORD:	J. KEPICH	DATE :	01/26

5/15/2026
c:\workdir\ncdot-pw.bentley.com_ncdot-pw-01\jeffrey kepich\d0529501\401_005_HB-0044_SMU_FT_S1-03_040093.dgn
jkepich

Docusign Envelope ID: 99D11E6B-EAE6-8D75-8060-39096869B815

8/26/21

BM. #1 - RAILROAD SPIKE SET IN 18" WALNUT, STA. 16+92.80 -L- (21.33' RT.) EL. 2636.77'

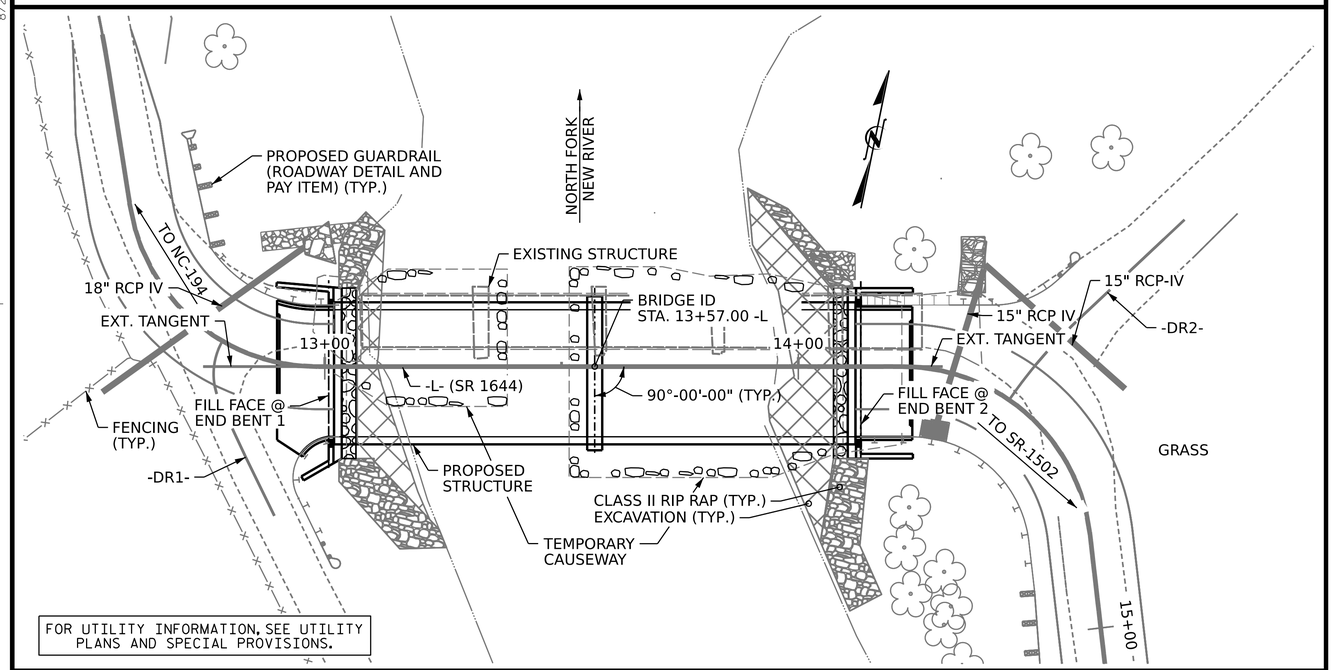

LOCATION SKETCH

NOTES:

ASSUMED LIVE LOAD = HL-93 OR ALTERNATE LOADING.

THIS BRIDGE HAS BEEN DESIGNED IN ACCORDANCE WITH THE AASHTO LRFD BRIDGE DESIGN SPECIFICATIONS.

THIS BRIDGE IS LOCATED IN SEISMIC ZONE 1.

FOR OTHER DESIGN DATA AND GENERAL NOTES, SEE SHEET SN.

FOR SUBMITTAL OR WORKING DRAWINGS, SEE SPECIAL PROVISIONS.

FOR FALSEWORK AND FORMWORK, SEE SPEICAL PROVISIONS.

FOR CRANE SAFETY, SEE SPECIAL PROVISIONS.

FOR GROUT FOR STRUCTURES, SEE SPECIAL PROVISIONS.

THE CONTRACTOR SHALL PROVIDE INDEPENDENT ASSURANCE SAMPLES OF REINFORCING STEEL AS FOLLOWS: FOR PROJECTS UP TO 400 TONS OF REINFORCEMENT STEEL, ONE 30 INCH SAMPLE OF EACH SIZE BAR USED, AND FOR PROJECTS REQUIRING OVER 400 TONS OF REINFORCING STEEL, TWO 30 INCH SAMPLES OF EACH SIZE BAR USED. THE SAMPLE BARS SHOULD COME FROM STEEL ACTUALLY USED IN THE PROJECT AND THE SAMPLES BARS SHOULD BE REPLACED BY SPLICED BARS AS SPECIFIED IN THE SAMPLE BAR REPLACEMENT CHART. PAYMENT FOR THE SAMPLE BARS AND REPLACEMENT REINFORCING STEEL SHALL BE CONSIDERED INCIDENTAL TO VARIOUS PAY ITEMS.

INASMUCH AS THE PAINT SYSTEM ON THE EXISTING STRUCTURAL STEEL CONTAINS LEAD, THE CONTRACTOR'S ATTENTION IS DIRECTED TO ARTICLE 107-1 OF THE STANDARD SPECIFICATIONS. ANY COSTS RESULTING FROM COMPLIANCE WITH APPLICABLE STATE OR FEDERAL REGULATIONS PERTAINING TO HANDLING OF MATERIALS CONTAINING LEAD BASED PAINT SHALL BE INCLUDED IN THE BID PRICE FOR "REMOVAL OF EXISTING STRUCTURE AT STATION 13+57.00 -L-."

AT THE CONTRACTOR'S OPTION, AND UPON REMOVAL OF THE CAUSEWAY, THE CLASS II RIP RAP USED MAY BE PLACED AS RIP RAP SLOPE PROTECTION. SEE SPECIAL PROVISIONS FOR CONSTRUCTION, MAINTENANCE AND REMOVAL OF TEMPORARY ACCESS AT STATION 13+57.00 -L-.

THE MATERIAL SHOWN IN THE CROSS-HATCHED AREA SHALL BE EXCAVATED FOR A DISTANCE UP TO 38 FT ON THE NORTH SIDE AND 37 FT ON THE SOUTH SIDE OF CENTERLINE ROADWAY AS DIRECTED BY THE ENGINEER. THIS WORK WILL BE PAID FOR AT THE CONTRACT LUMP SUM PRICE FOR UNCLASSIFIED STRUCTURE EXCAVATION. SEE SECTION 412 OF THE STANDARD SPECIFICATIONS.

THE EXISTING STRUCTURE CONSISTING OF FIVE SIMPLE SPANS (18'-0" MIN. TO 25'-0" MAX) OF STEEL I-BEAMS WITH A CLEAR ROADWAY WIDTH OF 11'-0" ON A TIMBER FLOOR ON REINFORCED CONCRETE SUBSTRUCTURES LOCATED 10'-0" UPSTREAM FROM PROPOSED STRUCTURE SHALL BE REMOVED. THE EXISTING BRIDGE IS PRESENTLY POSTED FOR LOAD LIMIT. SHOULD THE STRUCTURAL INTEGRITY OF THE BRIDGE DETERIORATE DURING CONSTRUCTION OF THE PROPOSED BRIDGE, A LOAD LIMIT MAY BE POSTED AND MAY BE REDUCED AS FOUND NECESSARY DURING THE LIFE OF THE PROJECT.

THE SUBSTRUCTURE OF THE EXISTING BRIDGE INDICATED ON THE PLANS IS FROM THE BEST INFORMATION AVAILABLE. SINCE THIS INFORMATION IS SHOWN FOR THE CONVENIENCE OF THE CONTRACTOR, THE CONTRACTOR SHALL HAVE NO CLAIM WHATSOEVER AGAINST THE DEPARTMENT OF TRANSPORTATION FOR ANY DELAYS OR ADDITIONAL COST INCURRED BASED ON DIFFERENCES BETWEEN THE EXISTING BRIDGE SUBSTRUCTURE SHOWN ON THE PLANS AND THE ACTUAL CONDITIONS AT THE PROJECT SITE.

REMOVAL OF THE EXISTING BRIDGE SHALL BE PERFORMED IN A MANNER THAT PREVENTS DEBRIS FROM FALLING INTO THE WATER. THE CONTRACTOR SHALL SUBMIT DEMOLITION PLANS FOR REVIEW AND REMOVE THE BRIDGE IN ACCORDANCE WITH ARTICLE 402-2 OF THE STANDARD SPECIFICATIONS.

THIS STRUCTURE HAS BEEN DESIGNED IN ACCORDANCE WITH ``HEC 18-EVALUATING SCOUR AT BRIDGES.''

FOR EROSION CONTROL MEASURES, SEE EROSION CONTROL PLANS.

FOR ASBESTOS ASSESSMENT FOR BRIDGE DEMOLITION AND RENOVATION ACTIVITIES, SEE SPECIAL PROVISIONS.

THE SCOUR CRITICAL ELEVATION FOR BENT NO. 1 IS ELEVATION 2619.00. SCOUR CRITICAL ELEVATIONS ARE USED TO MONITOR SCOUR PROBLEMS DURING THE LIFE OF THE STRUCTURE.

END BENT NO. 1 SCOUR ELEVATION IS 2621.00.

NO MORE THAN ONE TEMPORARY CAUSEWAY WILL BE IN PLACE AT ANY GIVEN TIME, AND NO MORE THAN 50% OF CREEK CHANNEL CAN BE IMPACTED AT ANY GIVEN TIME WITH A CAUSEWAY.

FOR CONCRETE WATERPROOFING MEMBRANE - CONCRETE WEARING SURFACE, SEE SPECIAL PROVISIONS.

TOTAL BILL OF MATERIAL

	REMOVAL OF EXISTING STRUCTURE @ STA. 13+57.00 -L-	ASBESTOS ASSESSMENT	PILE EXCAVATION IN SOIL	PILE EXCAVATION NOT IN SOIL	3'-0" DIA. DRILLED PIERS	PERMANENT STEEL CASING FOR 3'-0" DIA. DRILLED PIER	CSL TESTING	UNCLASSIFIED STRUCTURE EXCAVATION AT STATION 13+57.00 -L-	CONCRETE WEARING SURFACE	GROOVING BRIDGE FLOORS	CLASS A CONCRETE	BRIDGE APPROACH SLABS AT STATION 13+57.00 -L-	REINFORCING STEEL	SPIRAL COLUMN REINFORCING STEEL	HP 12 X 53 STEEL PILES		32" ALASKA RAIL	RIP RAP CLASS II (3'-0" THICK)	GEOTEXTILE FOR DRAINAGE	ELASTOMERIC BEARINGS	3'-0" X 1'-9" PRESTRESSED CONCRETE CORED SLABS		CONCRETE WATERPROOFING MEMBRANE - CONCRETE WEARING SURFACE
	LUMP SUM	LUMP SUM	LIN. FT.	LIN. FT.	LIN. FT.	LIN. FT.	EA.	LUMP SUM	SQ. FT.	SQ. FT.	CU. YDS.	LUMP SUM	LBS.	LBS.	NO.	LIN.FT.	LIN.FT.	TON	SQ. YD.	LUMP SUM	NO.	LIN.FT.	SQ. FT.
SUPERSTRUCTURE									2955	2617							205.25				20	1100	2955
END BENT NO. 1			15.00	25.00							29.20		3078		5	75.00		18.00	36.00				
BENT NO. 1					47.90	21.90	1.00				13.30		6164	1459									
END BENT NO. 2			15.00	25.00							30.40		3314		5	75.00		18.00	36.00				
TOTAL	LUMP SUM	LUMP SUM	30.00	50.00	47.90	21.90	1.00	LUMP SUM	2955	2617	72.90	LUMP SUM	12556	1459	10	150.00	205.25	36.00	72.00	LUMP SUM	20	1100	2955

HYDRAULIC DATA

DESIGN DISCHARGE	= 2300 C.F.S
FREQUENCY OF DESIGN DISCHARGE	= -2 YEARS*
DESIGN HIGH WATER ELEVATION	= 2632.10'
DRAINAGE AREA	= 145 SQ. MI.
BASE DISCHARGE (Q100)	= 20000 C.F.S.
BASE HIGH WATER ELEVATION	= 2647.80'

*DESIGN MAINTAINS OR IMPROVES EXISTING LEVEL OF SERVICE

OVERTOPPING FLOOD DATA

OVERTOPPING DISCHARGE	= 2300 C.F.S.
FREQUENCY OF OVERTOPPING FLOOD	= -2 YEARS
OVERTOPPING FLOOD ELEVATION	= 2632.10'**

**SAG POINT AT STA. 14+77.99 -L- (LT. SHOULDER)

SAMPLE BAR REPLACEMENT

SIZE	LENGTH
#3	6'-2"
#4	7'-4"
#5	8'-6"
#6	9'-8"
#7	10'-10"
#8	12'-0"
#9	13'-2"
#10	14'-6"
#11	15'-10"

PROJECT NO. HB-0044

ASHE COUNTY

STATION: 13+57.00 -L-

SHEET 4 OF 5

STATE OF NORTH CAROLINA
DEPARTMENT OF TRANSPORTATION
RALEIGH

GENERAL DRAWING

FOR BRIDGE ON SR 1644
OVER NORTH FORK NEW RIVER
BETWEEN NC-194 & SR 1502

NORTH CAROLINA PROFESSIONAL SEAL 037903 ENGINEER JEFFREY M KEPICH

Signed by: Jeffrey Kepich 7C5C71DBEF914E3... 6/12/2026

ms consultants, inc.
5444 Wade Park Blvd.
Suite 160
Raleigh, NC 27607
NC License Number : C-3239

DOCUMENT NOT CONSIDERED FINAL UNLESS ALL SIGNATURES COMPLETED

REVISIONS						SHEET NO.
NO.	BY:	DATE:	NO.	BY:	DATE:	S1-04
1			3			TOTAL SHEETS
2			4			24

DRAWN BY :	J. KEPICH	DATE :	01/26
CHECKED BY :	J. PAPCIAK	DATE :	01/26
DESIGN ENGINEER OF RECORD:	J. KEPICH	DATE :	01/26

6/12/2026
c:\workdir\ncdot-pw.bentley.com_ncdot-pw-01\jeffrey kepich\d0529501\401_007_HB-0044_SMU_BM_S1-04_040093.dgn
jkepich

Docusign Envelope ID: 99D11E6B-EAE6-8D75-8060-39096869B815

8/26/21

LOAD AND RESISTANCE FACTOR RATING (LRFR) SUMMARY FOR PRESTRESSED CONCRETE GIRDERS

LOAD TYPE		VEHICLE	WEIGHT (W) (TONS)	CONTROLLING LOAD RATING (#)	MINIMUM RATING FACTORS (RF)	TONS = W x RF	STRENGTH I LIMIT STATE											SERVICE III LIMIT STATE						COMMENT NUMBER
								MOMENT					SHEAR						MOMENT					
							LIVE-LOAD FACTORS (γ LL)	DISTRIBUTION FACTORS (DF)	RATING FACTOR	SPAN	GIRDER LOCATION	DISTANCE FROM LEFT END OF SPAN (ft)	DISTRIBUTION FACTORS (DF)	RATING FACTOR	SPAN	GIRDER LOCATION	DISTANCE FROM LEFT END OF SPAN (ft)	LIVE-LOAD FACTORS (γ LL)	DISTRIBUTION FACTORS (DF)	RATING FACTOR	SPAN	GIRDER LOCATION	DISTANCE FROM LEFT END OF SPAN (ft)	
DESIGN LOAD		HL-93 (INVENTORY)	N/A	1	1.430	--	1.75	0.24	1.430	55'	E	27.00	0.52	1.590	55'	E	5.00	0.80	0.24	1.620	55'	E	27.00	
		HL-93 (OPERATING)	N/A		1.850	--	1.35	0.24	1.850	55'	E	27.00	0.52	2.090	55'	E	5.00	N/A	--	--	--	--	--	
		HS-20 (INVENTORY)	36.000	2	1.790	64.44	1.75	0.24	1.790	55'	E	27.00	0.52	1.930	55'	E	5.00	0.80	0.24	2.040	55'	E	27.00	
		HS-20 (OPERATING)	36.000		2.320	83.52	1.35	0.24	2.320	55'	E	27.00	0.52	2.540	55'	E	5.00	N/A	--	--	--	--	--	
LEGAL LOAD	SINGLE VEHICLE (SV)	SNSH	13.500		4.280	57.78	1.40	0.24	4.700	55'	E	27.00	0.52	5.720	55'	E	5.00	0.80	0.24	4.280	55'	E	27.00	
		SNGARBS2	20.000		3.320	66.40	1.40	0.24	3.650	55'	E	27.00	0.52	4.110	55'	E	5.00	0.80	0.24	3.320	55'	E	27.00	
		SNAGRIS2	22.000		3.200	70.40	1.40	0.24	3.520	55'	E	27.00	0.52	3.840	55'	E	5.00	0.80	0.24	3.200	55'	E	27.00	
		SNCOTTS3	27.250		2.130	58.04	1.40	0.24	2.340	55'	E	27.00	0.52	2.800	55'	E	5.00	0.80	0.24	2.130	55'	E	27.00	
		SNAGGRS4	34.925		1.830	63.91	1.40	0.24	2.010	55'	E	27.00	0.52	2.360	55'	E	5.00	0.80	0.24	1.830	55'	E	27.00	
		SNS5A	35.550		1.790	63.63	1.40	0.24	1.970	55'	E	27.00	0.52	2.420	55'	E	5.00	0.80	0.24	1.790	55'	E	27.00	
		SNS6A	39.950		1.660	66.32	1.40	0.24	1.830	55'	E	27.00	0.52	2.230	55'	E	5.00	0.80	0.24	1.660	55'	E	27.00	
		SNS7B	42.000		1.580	66.36	1.40	0.24	1.740	55'	E	27.00	0.52	2.220	55'	E	5.00	0.80	0.24	1.580	55'	E	27.00	
	TRUCK TRACTOR SEMI-TRAILER (TTST)	TNAGRIT3	33.000		2.030	66.99	1.40	0.24	2.240	55'	E	27.00	0.52	2.650	55'	E	5.00	0.80	0.24	2.030	55'	E	27.00	
		TNT4A	33.075		2.050	67.80	1.40	0.24	2.250	55'	E	27.00	0.52	2.550	55'	E	5.00	0.80	0.24	2.050	55'	E	27.00	
		TNT6A	41.600		1.700	70.72	1.40	0.24	1.870	55'	E	27.00	0.52	2.430	55'	E	5.00	0.80	0.24	1.700	55'	E	27.00	
		TNT7A	42.000		1.720	72.24	1.40	0.24	1.890	55'	E	27.00	0.52	2.270	55'	E	5.00	0.80	0.24	1.720	55'	E	27.00	
		TNT7B	42.000		1.790	75.18	1.40	0.24	1.970	55'	E	27.00	0.52	2.140	55'	E	5.00	0.80	0.24	1.790	55'	E	27.00	
		TNAGRIT4	43.000		1.700	73.10	1.40	0.24	1.860	55'	E	27.00	0.52	2.060	55'	E	5.00	0.80	0.24	1.700	55'	E	27.00	
		TNAGT5A	45.000		1.590	71.55	1.40	0.24	1.750	55'	E	27.00	0.52	2.080	55'	E	5.00	0.80	0.24	1.590	55'	E	27.00	
		TNAGT5B	45.000	3	1.560	70.20	1.40	0.24	1.720	55'	E	27.00	0.52	1.950	55'	E	5.00	0.80	0.24	1.560	55'	E	27.00	
EMERGENCY VEHICLE (EV)		EV2	28.750		2.360	67.85	1.30	0.24	2.800	55'	E	27.00	0.52	3.080	55'	E	5.00	0.80	0.24	2.360	55'	E	27.00	
		EV3	43.000	4	1.530	65.79	1.30	0.24	1.820	55'	E	27.00	0.52	2.050	55'	E	5.00	0.80	0.24	1.530	55'	E	27.00	

LOAD FACTORS:

DESIGN LOAD RATING FACTORS	LIMIT STATE	γDC	γDW
	STRENGTH I	1.25	1.50
	SERVICE III	1.00	1.00

NOTES:

MINIMUM RATING FACTORS ARE BASED ON THE STRENGTH I AND SERVICE III LIMIT STATES.

ALLOWABLE STRESSES FOR SERVICE III LIMIT STATE ARE AS REQUIRED FOR DESIGN.

COMMENTS:

1.
2.
3.
4.

CONTROLLING LOAD RATING

1 DESIGN LOAD RATING (HL-93)
2 DESIGN LOAD RATING (HS-20)
3 LEGAL LOAD RATING * *
4 EMERGENCY VEHICLE LOAD RATING **
* * SEE CHART FOR VEHICLE TYPE

GIRDER LOCATION

I - INTERIOR GIRDER
E - EXTERIOR LEFT OR RIGHT GIRDER

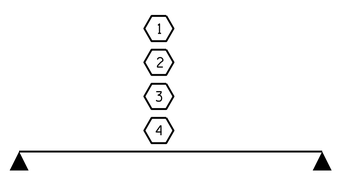

LRFR SUMMARY

FOR SPANS "A & B"

PROJECT NO. HB-0044
ASHE COUNTY
STATION: 13+57.00 -L-

SHEET 5 OF 5

STATE OF NORTH CAROLINA
DEPARTMENT OF TRANSPORTATION
RALEIGH

STANDARD

LRFR SUMMARY FOR 55' CORED SLAB UNIT 90° SKEW

(NON-INTERSTATE TRAFFIC)

NORTH CAROLINA PROFESSIONAL SEAL 037903 ENGINEER JEFFREY M. KEPICH

Signed by: Jeffrey Kepich 7C5C71DBEF914E3... 6/12/2026

DOCUMENT NOT CONSIDERED FINAL UNLESS ALL SIGNATURES COMPLETED

ms consultants, inc.
5444 Wade Park Blvd.
Suite 160
Raleigh, NC 27607
NC License Number : C-3239

REVISIONS								SHEET NO.
NO.	BY:	DATE:	NO.	BY:	DATE:			S1-05
1			3					TOTAL SHEETS
2			4					24

ASSEMBLED BY:	J. KEPICH	DATE :	01/2026
CHECKED BY :	J. PAPCIAK	DATE :	01/2026
DRAWN BY : MAA 1/08	REV. 11/12/08RR		MAA/GM
CHECKED BY : GM/DI 2/08	REV. 10/1/11		MAA/GM
	REV. 04/23		BNB/AAI

5/15/2026
c:\workdir\ncdot-pw.bentley.com_ncdot-pw-01\jeffrey kepich\d0529501\401_009_HB-0044_SMU_LRFR_S1-05_040093.dgn
jkepich

(ALTERED) STD. NO. 21LRFR1_90S_55L

Docusign Envelope ID: 99D11E6B-EAE6-8D75-8060-39096869B815

8/26/21

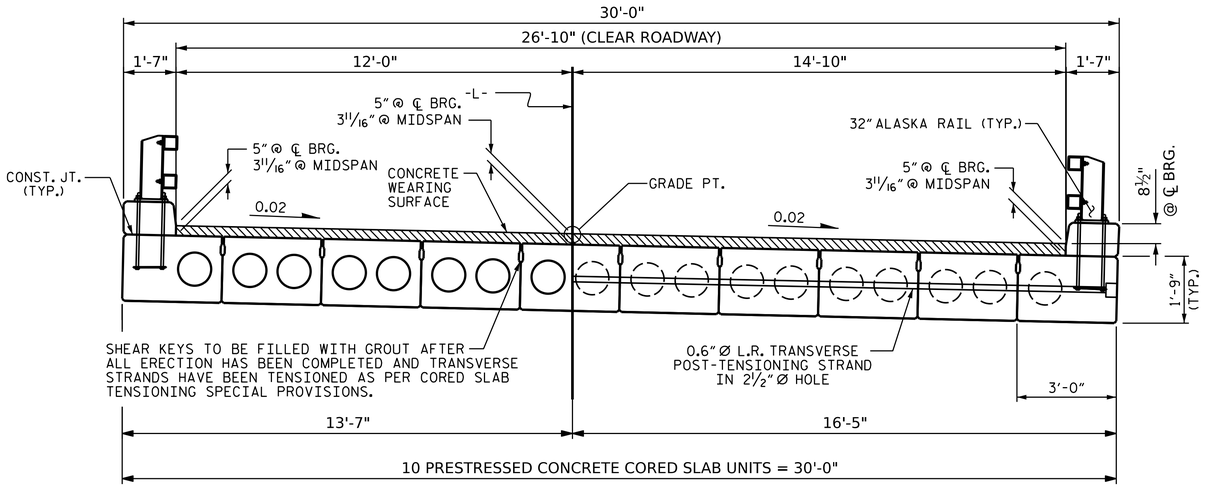

HALF SECTION
THROUGH VOIDS

HALF SECTION
AT INTERMEDIATE DIAPHRAGMS

TYPICAL SECTION

✱ - THE MAXIMUM CURB HEIGHT AND CONCRETE WEARING THICKNESS IS SHOWN. THE HEIGHT OF THE CURB AND CONCRETE WEARING THICKNESS VARIES WHILE THE TOP OF THE CURB FOLLOWS THE PROFILE OF THE GUTTERLINE. FOR CURB HEIGHT DETAILS AND CONCRETE WEARING THICKNESS. SEE SHEET 3 OF 5.

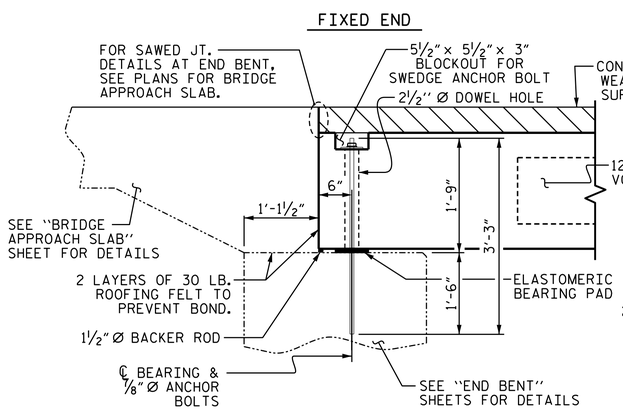

SECTION AT END BENT
(TYP. FOR ALL CORED SLABS)

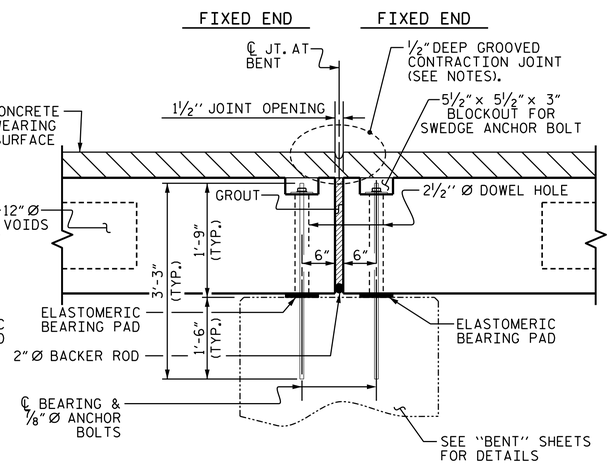

SECTION AT BENT
(TYP. FOR ALL CORED SLABS)

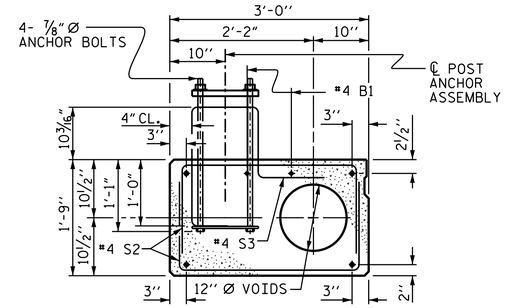

EXTERIOR SLAB SECTION

(FOR PRESTRESSED STRAND LAYOUT, SEE INTERIOR SLAB SECTION.)

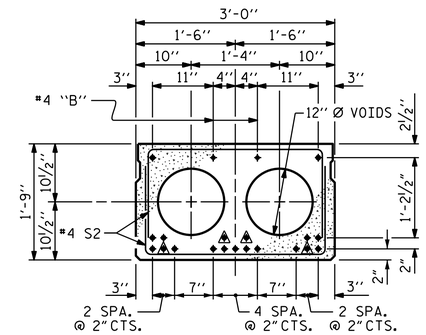

INTERIOR SLAB SECTION
(55' UNIT)
(19 STRANDS REQUIRED)

0.6" Ø LOW RELAXATION STRAND LAYOUT

● BOND SHALL BE BROKEN ON THESE STRANDS FOR A DISTANCE OF 6'-0" FROM END OF CORED SLAB UNIT. SEE STANDARD SPECIFICATIONS, ARTICLE 1078-7.

DEBONDING LEGEND

SWEDGE ANCHOR BOLT NOTES

AT ALL ENDS OF CORED SLAB SECTIONS WITH HOLD-DOWN ANCHOR BOLTS, NUTS FOR ANCHOR BOLTS SHALL BE FINGER-TIGHTENED AND THEN BACKED OFF 1/2 TURN. THE THREAD OF THE NUT AND BOLT SHALL THEN BE BURRED WITH A SHARP POINTED TOOL.

THE 2 1/2" Ø DOWEL HOLES AT FIXED ENDS OF CORED SLAB SECTIONS WITH HOLD-DOWN SWEDGE ANCHOR BOLTS SHALL BE FILLED WITH NON-SHRINK GROUT TO THE BOTTOM OF THE ANCHOR BOLT BLOCKOUT PRIOR TO INSTALLING THE ANCHOR PLATES, WASHERS, AND NUTS.

THE ANCHOR BOLT BLOCKOUTS IN CORED SLAB SECTIONS SHALL BE FILLED WITH NON-SHRINK GROUT PRIOR TO PLACEMENT OF THE WEARING SURFACE.

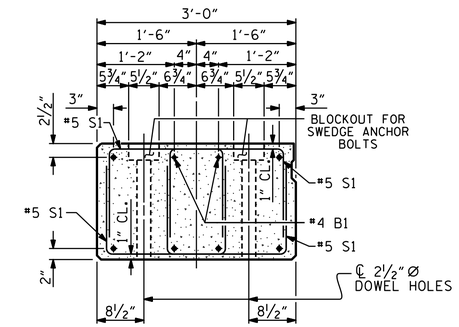

END ELEVATION

SHOWING PLACEMENT OF DOUBLE STIRRUPS AND LOCATION OF DOWEL HOLES. (STRAND LAYOUT NOT SHOWN.) EXTERIOR SLAB SECTION SHOWN-INTERIOR SLAB SECTION SIMILAR EXCEPT SHEAR KEY LOCATION.

PERMITTED THREADED INSERT CAST IN OUTSIDE FACE OF EXTERIOR UNIT AND RECESSED 3/8", SIZE TO BE DETERMINED BY CONTRACTOR.

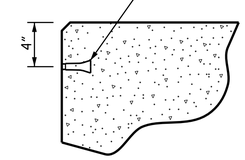

THREADED INSERT DETAIL

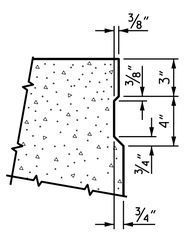

SHEAR KEY DETAIL

NOTE: OMIT SHEAR KEY ON OUTSIDE FACE OF EXTERIOR CORED SLABS.

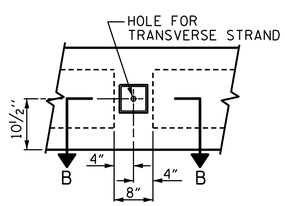

ELEVATION VIEW

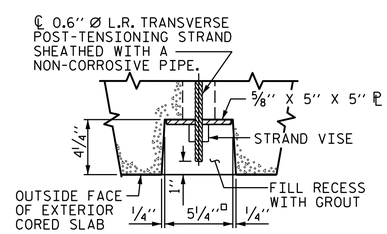

SECTION B-B

GROUTED RECESS AT END OF POST-TENSIONED STRAND OF CORED SLABS

PROJECT NO. HB-0044
ASHE COUNTY
STATION: 13+57.00 -L-

SHEET 1 OF 5

STATE OF NORTH CAROLINA
DEPARTMENT OF TRANSPORTATION
RALEIGH

STANDARD
3'-0" X 1'-9"
PRESTRESSED CONCRETE CORED SLAB UNIT
90° SKEW

NORTH CAROLINA PROFESSIONAL SEAL 037903 ENGINEER JEFFREY M. KEPICH

Signed by: Jeffrey Kepich
7C5C71DBEF914E3...
6/12/2026

ms consultants, inc.
5444 Wade Park Blvd.
Suite 160
Raleigh, NC 27607
NC License Number : C-3239

DOCUMENT NOT CONSIDERED FINAL UNLESS ALL SIGNATURES COMPLETED

REVISIONS							
NO.	BY:	DATE:	NO.	BY:	DATE:	SHEET NO.	
1			3			S1-06	
2			4			TOTAL SHEETS	
						24	

ASSEMBLED BY:	J. KEPICH		DATE :	01/2026
CHECKED BY :	J. PAPCIAK		DATE :	01/2026
DRAWN BY :	DGE	5/09	REV. 8/14	MAA/TMG
CHECKED BY :	BCH	6/09	REV. 5/23	BNB/AAI

5/15/2026
c:\workdir\ncdot-pw.bentley.com_ncdot-pw-01\jeffrey kepich\d0529501\401_011_HB-0044_SMU_TS_S1-06_040093.dgn
jkepich

(ALTERED) STD. NO. 21" PCS2_30_90S

Docusign Envelope ID: 99D11E6B-EAE6-8D75-8060-39096869B815

8/26/21

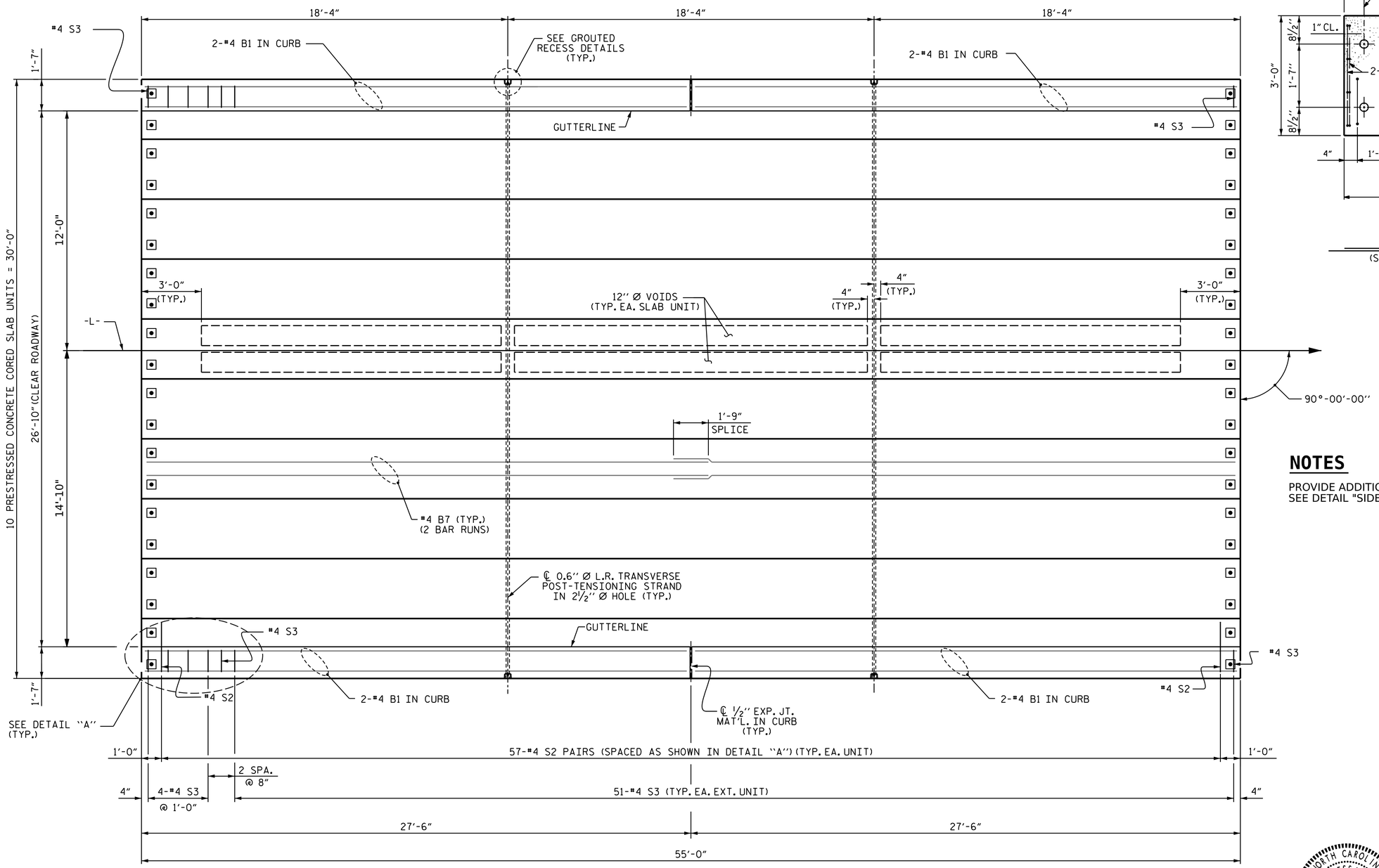

PLAN OF UNIT

(SPAN A SHOWN, SPAN B OPPOSITE)

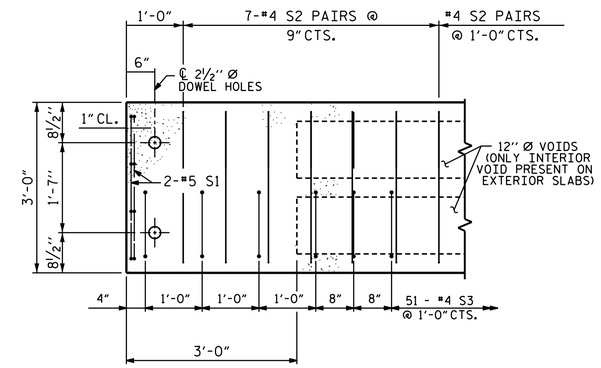

DETAIL "A"

(S3 BARS AT END BENT 1 SHOWN, END BENT 2 SIMILAR)

NOTES

PROVIDE ADDITIONAL #4 S2 BARS AT EACH ALASKA RAIL POST. SEE DETAIL "SIDE VIEW AT POST LOCATION" ON SHEET S1-09.

PROJECT NO. HB-0044

ASHE COUNTY

STATION: 13+57.00 -L-

SHEET 2 OF 5

STATE OF NORTH CAROLINA
DEPARTMENT OF TRANSPORTATION
RALEIGH

PLAN OF 55' UNIT 26'-10" CLEAR ROADWAY 90° SKEW

NORTH CAROLINA PROFESSIONAL SEAL 037903 ENGINEER JEFFREY M. KEPICH

Signed by: Jeffrey Kepich 7C5C71DBEF914E3... 6/12/2026

ms consultants, inc.
5444 Wade Park Blvd.
Suite 160
Raleigh, NC 27607
NC License Number : C-3239

DOCUMENT NOT CONSIDERED FINAL UNLESS ALL SIGNATURES COMPLETED

REVISIONS						SHEET NO.
NO.	BY:	DATE:	NO.	BY:	DATE:	S1-07
1			3			TOTAL SHEETS
2			4			24

ASSEMBLED BY:	J. KEPICH	DATE :	01/2026
CHECKED BY :	J. PAPCIAK	DATE :	01/2026

DRAWN BY :	DGE	3/09	REV.	12/5/11	MAA/AAC
CHECKED BY :	BCH	3/09	REV.	8/14	MAA/TMG

5/15/2026
c:\workdir\ncdot-pw.bentley.com_ncdot-pw-01\jeffrey kepich\d0529501\401_013_HB-0044_SMU_S1_S1-07_040093.dgn
jkepich

(ALTERED) STD. NO. 21" PCS_30_90S_55L

Docusign Envelope ID: 99D11E6B-EAE6-8D75-8060-39096869B815

8/26/21

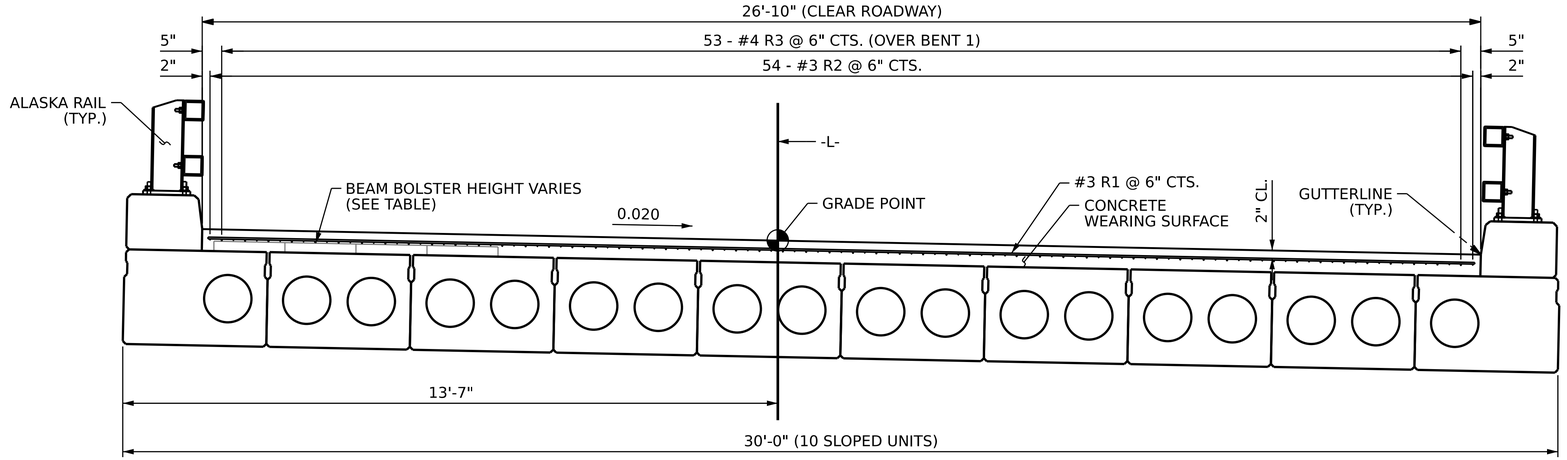

TYPICAL SECTION

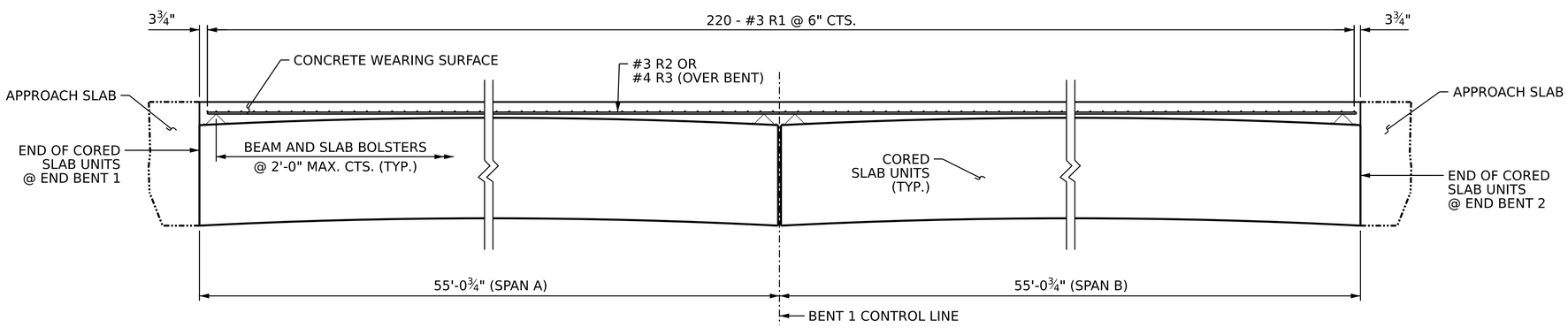

ELEVATION

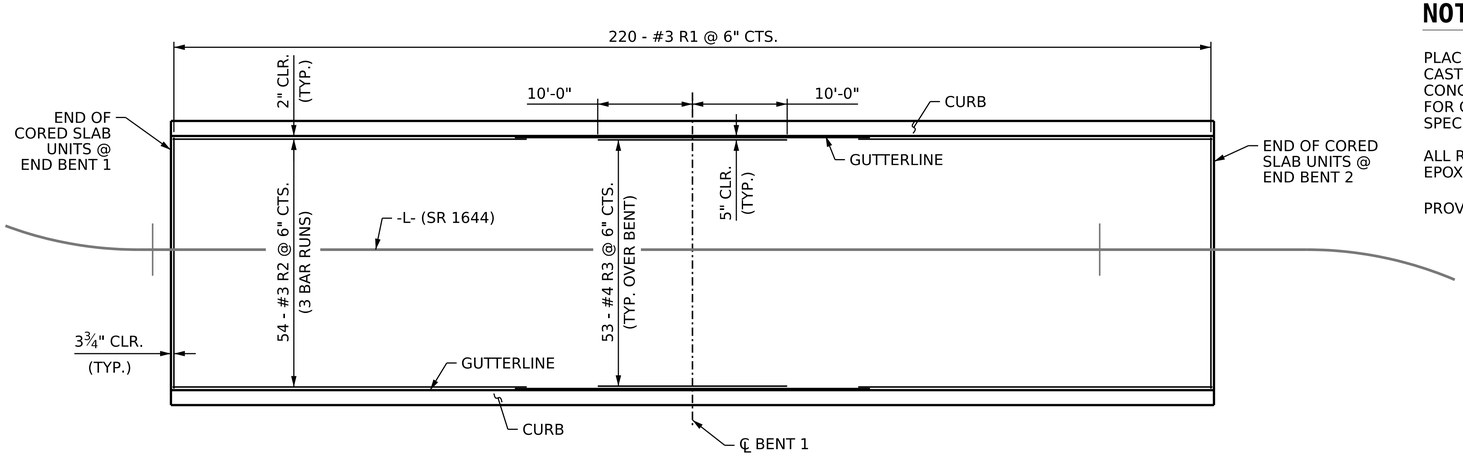

PLAN

NOTES

PLACEMENT OF THE CONCRETE WEARING SURFACE SHALL OCCUR AFTER CASTING THE CONCRETE RAIL. THE COST OF THE #3 BARS CAST WITH THE CONCRETE WEARING SURFACE SHALL BE INCLUDED IN THE UNIT PRICE BID FOR CONCRETE WEARING SURFACE. FOR CONCRETE WEARING SURFACE, SEE SPECIAL PROVISIONS.

ALL REINFORCING STEEL FOR THE CONCRETE WEARING SURFACE SHALL BE EPOXY COATED.

PROVIDE ½" DEEP GROOVED CONTRACTION JOINT AT ℄ BENT 1.

CONCRETE WEARING SURFACE BILL OF MATERIAL

BAR	NO.	SIZE	TYPE	LENGTH	WEIGHT
*R1	220	#3	STR	26'-6"	2192
*R2	162	#3	STR	37'-6"	2284
*R3	53	#4	STR	20'-0"	708
EPOXY COATED REINF. STEEL =					5184
CONCRETE WEARING SURFACE =					2955 SQ. FT.

SPLICE LENGTH CHART

BAR SIZE	EPOXY COATED
#3	1'-3"

BEAM BOLSTER HEIGHT

SPAN	AT ℄ BEARINGS		AT MID-SPAN
	NEAR	FAR	
A & B	2"	2"	¾" **

** USE SLAB BOLSTER

PROJECT NO. HB-0044

ASHE COUNTY

STATION: 13+57.00 -L-

SHEET 3 OF 5

STATE OF NORTH CAROLINA
DEPARTMENT OF TRANSPORTATION
RALEIGH

CONCRETE WEARING SURFACE DETAILS

NORTH CAROLINA PROFESSIONAL SEAL 037903 ENGINEER JEFFREY M KEPICH

Signed by: Jeffrey Kepich 7C5C71DBEF914E3... 6/12/2026

ms consultants, inc.
5444 Wade Park Blvd.
Suite 160
Raleigh, NC 27607
NC License Number : C-3239

DOCUMENT NOT CONSIDERED FINAL UNLESS ALL SIGNATURES COMPLETED

REVISIONS							
NO.	BY:	DATE:	NO.	BY:	DATE:	SHEET NO.	
1			3			S1-08	
2			4			TOTAL SHEETS	
						24	

DRAWN BY :	J. KEPICH	DATE :	01/26
CHECKED BY :	J. PAPCIAK	DATE :	01/26
DESIGN ENGINEER OF RECORD:	J. KEPICH	DATE :	01/26

5/15/2026
c:\workdir\ncdot-pw.bentley.com_ncdot-pw-01\jeffrey kepich\d0529501\401_015_HB-0044_SMU_CWS_S1-08_040093.dgn
jkepich

Docusign Envelope ID: 99D11E6B-EAE6-8D75-8060-39096869B815

8/26/21

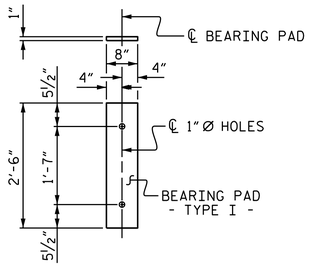

FIXED END
(TYPE I - 40 REQ'D)

ELASTOMERIC BEARING DETAILS

ELASTOMER IN ALL BEARINGS SHALL BE 50 DUROMETER HARDNESS.

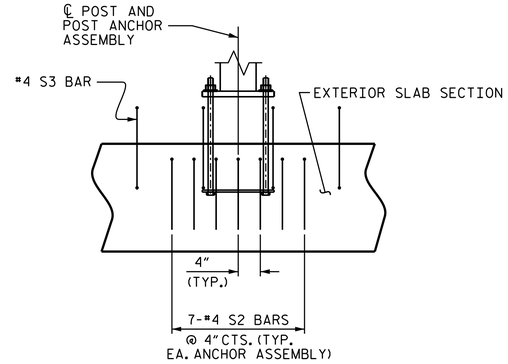

SIDE VIEW AT POST LOCATION

(SHOWING ADDITIONAL S2 BARS AT EACH POST ASSEMBLY)

BAR TYPES

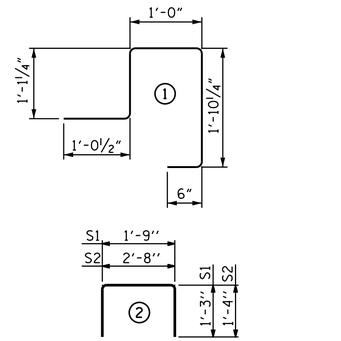

ALL BAR DIMENSIONS ARE OUT TO OUT

CORED SLABS REQUIRED			
	NUMBER	LENGTH	TOTAL LENGTH
55' UNIT			
EXTERIOR C.S.	4	55'-0"	220'-0"
INTERIOR C.S.	16	55'-0"	880'-0"
TOTAL	20		1,100'-0"

DEAD LOAD DEFLECTION AND CAMBER	
	3'-0" x 1'-9"
55' CORED SLAB UNIT	0.6"Ø L.R. STRAND
CAMBER (SLAB ALONE IN PLACE)	1⅝" ↑
DEFLECTION DUE TO SUPERIMPOSED DEAD LOAD**	5/16" ↓
FINAL CAMBER	1 5/16" ↑

** DOES NOT INCLUDE FUTURE WEARING SURFACE

BILL OF MATERIAL FOR ONE 55' CORED SLAB UNIT							
				EXTERIOR UNIT		INTERIOR UNIT	
BAR	NUMBER	SIZE	TYPE	LENGTH	WEIGHT	LENGTH	WEIGHT
B7	4	#4	STR	28'-3"	75	28'-3"	75
S1	8	#5	2	4'-3"	35	4'-3"	35
S2	114	#4	2			5'-4"	406
S2	163	#4	2	5'-4"	581		
* S3	56	#4	1	5'-6"	206		
REINFORCING STEEL			LBS.		691		516
* EPOXY COATED REINFORCING STEEL			LBS.		206		
6500 P.S.I. CONCRETE			CU. YDS.		9.2		7.8
0.6"Ø L.R. STRANDS			No.		19		19

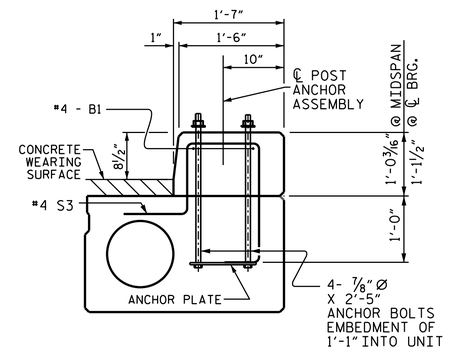

ALASKA RAIL CURB SECTION

NOTES

ALL PRESTRESSING STRANDS SHALL BE 7-WIRE LOW RELAXATION GRADE 270 STRANDS AND SHALL CONFORM TO AASHTO M203 EXCEPT FOR SAMPLING REQUIREMENTS WHICH SHALL BE IN ACCORDANCE WITH THE STANDARD SPECIFICATIONS.

ALL REINFORCING STEEL CAST WITH THE CORED SLAB SECTIONS SHALL BE GRADE 60 AND SHALL BE INCLUDED IN THE UNIT PRICE BID FOR PRESTRESSED CONCRETE CORED SLABS.

RECESSES FOR TRANSVERSE STRANDS SHALL BE GROUTED AFTER THE TENSIONING OF THE STRANDS.

THE 2½"Ø DOWEL HOLES AT FIXED ENDS OF SLAB SECTIONS SHALL BE FILLED WITH NON-SHRINK GROUT.

WHEN CORED SLABS ARE CAST, AN INTERNAL HOLD-DOWN SYSTEM SHALL BE EMPLOYED TO PREVENT VOIDS FROM RISING OR MOVING SIDEWAYS. AT LEAST SIX WEEKS PRIOR TO CASTING CORED SLABS, THE CONTRACTOR SHALL SUBMIT TO THE ENGINEER FOR REVIEW AND COMMENT, DETAILED DRAWINGS OF THE PROPOSED HOLD-DOWN SYSTEM. IN ADDITION TO STRUCTURAL DETAILS, LOCATION AND SPACING OF THE HOLD-DOWNS SHALL BE INDICATED.

WHEN A CONCRETE WEARING SURFACE IS DETAILED ON THE CORED SLAB BRIDGE TYPICAL SECTION, THE TOP SURFACE OF THE CORED SLAB UNITS SHALL HAVE A ⅜"RAKED FINISH.

THE TRANSFER OF LOAD FROM THE ANCHORAGES TO THE CORED SLAB UNIT SHALL BE DONE WHEN THE CONCRETE HAS REACHED A COMPRESSIVE STRENGTH OF NOT LESS THAN 4900 PSI.

ALL REINFORCING STEEL IN CURBS SHALL BE EPOXY COATED.

PRESTRESSING STRANDS SHALL BE CUT FLUSH WITH THE CORED SLAB UNIT ENDS.

APPLY EPOXY PROTECTIVE COATING TO CORED SLAB UNIT ENDS.

GROOVED CONTRACTION JOINTS, ½" IN DEPTH, SHALL BE TOOLED IN ALL EXPOSED FACES OF THE CURB AND IN ACCORDANCE WITH ARTICLE 825-10(B) OF THE STANDARD SPECIFICATIONS. A CONTRACTION JOINT SHALL BE LOCATED AT EACH THIRD POINT BETWEEN CURB EXPANSION JOINTS. ONLY ONE CONTRACTION JOINT IS REQUIRED AT MIDPOINT OF CURB SEGMENTS LESS THAN 20 FEET IN LENGTH AND NO CONTRACTION JOINTS ARE REQUIRED FOR THOSE SEGMENTS LESS THAN 10 FEET IN LENGTH.

FLAME CUTTING OF THE TRANSVERSE POST-TENSIONING STRAND IS NOT ALLOWED.

MAINTAIN A SYMMETRIC TENSION FORCE BETWEEN EACH PAIR OF TRANSVERSE POST TENSIONING STRANDS IN THE DIAPHRAGM.

THE #4 S2 STIRRUPS MAY BE SHIFTED AS NECESSARY TO MAINTAIN 1" CLEAR TO THE GROUTED RECESS.

THE PERMITTED THREADED INSERTS ARE DETAILED AS AN OPTION FOR THE CONTRACTOR TO ATTACH FALSEWORK AND FORMWORK DURING CONSTRUCTION.

THE BACKER RODS SHALL CONFORM TO THE REQUIREMENTS OF TYPE M BOND BREAKER. SEE SECTION 1028 OF THE STANDARD SPECIFICATIONS.

THE PERMITTED THREADED INSERTS IN THE EXTERIOR UNITS SHALL BE SIZED BY THE CONTRACTOR, SPACED AT 4'-0" CENTERS AND GALVANIZED IN ACCORDANCE WITH SECTION 1076 OF THE STANDARD SPECIFICATIONS. STAINLESS STEEL THREADED INSERTS MAY BE USED AS AN ALTERNATE.

THE PERMITTED THREADED INSERTS SHALL BE GROUTED BY THE CONTRACTOR IMMEDIATELY FOLLOWING REMOVAL OF THE FALSEWORK.

THE COST OF THE PERMITTED THREADED INSERTS SHALL BE INCLUDED IN THE PRICE BID FOR THE PRECAST UNITS.

THE COST OF THE METAL RAIL ANCHOR ASSEMBLY CAST WITH THE CORED SLAB SECTIONS SHALL BE INCLUDED IN THE PRICE BID FOR THE PRECAST UNITS.

THE 2½"Ø DOWEL HOLES AT FIXED ENDS OF CORED SLAB SECTIONS WITH HOLD-DOWN ANCHOR BOLTS SHALL BE FILLED WITH NON-SHRINK GROUT TO THE BOTTOM OF THE ANCHOR BOLT BLOCKOUT PRIOR TO INSTALLING THE ANCHOR PLATES, WASHERS, AND NUTS.

THE ANCHOR BOLT BLOCKOUTS IN CORED SLAB SECTIONS SHALL BE FILLED WITH NON-SHRINK GROUT PRIOR TO PLACEMENT OF THE CONCRETE WEARING SURFACE.

GRADE 270 STRANDS	
	0.6"Ø L.R.
AREA (SQUARE INCHES)	0.217
ULTIMATE STRENGTH (LBS. PER STRAND)	58,600
APPLIED PRESTRESS (LBS. PER STRAND)	43,950

GROOVING BRIDGE FLOORS	
APPROACH SLABS	556 SQ. FT.
BRIDGE WEARING SURFACE	2617 SQ. FT.
TOTAL	3173 SQ. FT.

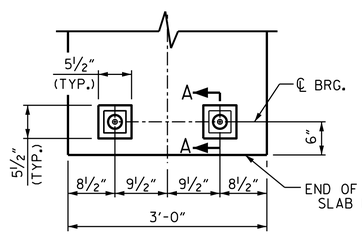

TYPICAL PLAN
(TYP. FOR ALL CORED SLABS)

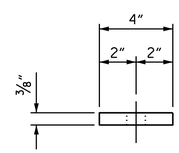

CONCRETE RELEASE STRENGTH	
UNIT	PSI
55' UNITS	4900

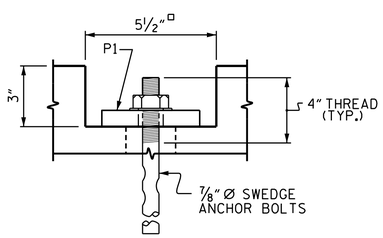

SECTION A-A
(FIXED)

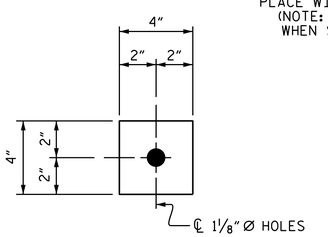

PLATE DETAILS - P1
(FIXED)
P1 (80 REQ'D.)

BLOCKOUT DETAIL FOR ANCHOR BOLTS
(TYP. FOR ALL CORED SLABS)

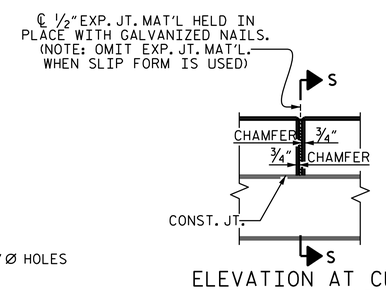

ELEVATION AT CURB
EXPANSION JOINTS

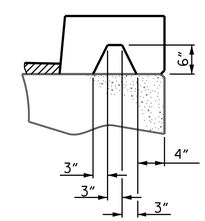

SECTION S-S
AT DAM IN OPEN JOINT
(THIS IS TO BE USED ONLY
WHEN SLIP FORM IS USED)

PROJECT NO. HB-0044
ASHE COUNTY
STATION: 13+57.00 -L-

SHEET 4 OF 5

STATE OF NORTH CAROLINA
DEPARTMENT OF TRANSPORTATION
RALEIGH

3'-0" X 1'-9"
PRESTRESSED CONCRETE
CORED SLAB UNIT
90° SKEW

NORTH CAROLINA PROFESSIONAL SEAL 037903 ENGINEER JEFFREY M KEPICH
Signed by: Jeffrey Kepich 7C5C71DBEF914E3... 6/12/2026

ms consultants, inc.
5444 Wade Park Blvd.
Suite 160
Raleigh, NC 27607
NC License Number : C-3239

DOCUMENT NOT CONSIDERED FINAL UNLESS ALL SIGNATURES COMPLETED

REVISIONS							
NO.	BY:	DATE:	NO.	BY:	DATE:	SHEET NO.	S1-09
1			3			TOTAL SHEETS	24
2			4				

ASSEMBLED BY:	J. KEPICH	DATE :	01/2026
CHECKED BY :	J. PAPCIAK	DATE :	01/2026
DRAWN BY : DGE 5/09	REV. 5/18	MAA/THC	
CHECKED BY : BCH 6/09	REV. 5/23	BNB/AAI	

5/15/2026
c:\workdir\ncdot-pw.bentley.com_ncdot-pw-01\jeffrey kepich\d0529501\401_017_HB-0044_SMU_CS_S1-09_040093.dgn
jkepich

Docusign Envelope ID: 99D11E6B-EAE6-8D75-8060-39096869B815

8/26/21

BILL OF MATERIAL FOR CURB & END POSTS					
BAR	NO.	SIZE	TYPE	LENGTH	WEIGHT
✳B1	16	#4	STR	27'-1"	433
✳E1	40	#7	STR	3'-1"	252
✳F1	32	#6	STR	3'-6"	168
✳EPOXY COATED REINFORCING STEEL					853 LBS.
CLASS AA CONCRETE					13.5 CU.YDS.
TOTAL CONCRETE CURB					220.25 LIN. FT.

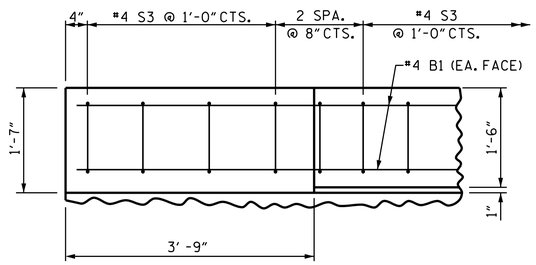

PLAN OF CURB

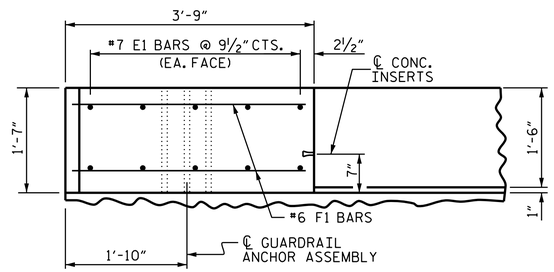

PLAN OF END POST

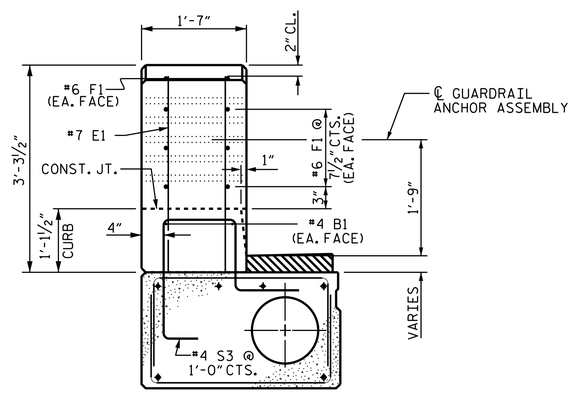

END VIEW

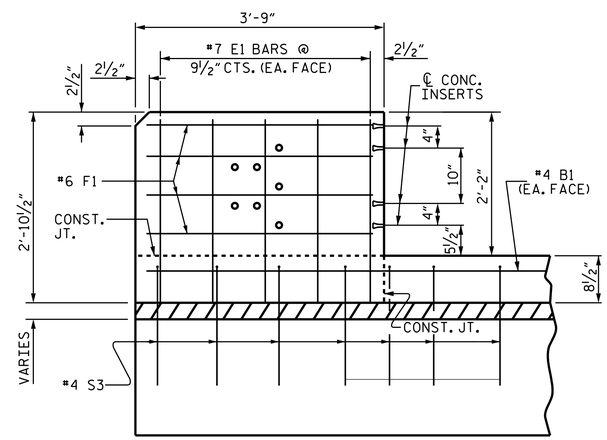

ELEVATION

CURB AND END POST FOR 32" ALASKA RAIL

PROJECT NO. HB-0044

ASHE COUNTY

STATION: 13+57.00 -L-

SHEET 5 OF 5

STATE OF NORTH CAROLINA
DEPARTMENT OF TRANSPORTATION
RALEIGH

CONCRETE CURBS AND END POSTS

NORTH CAROLINA PROFESSIONAL SEAL 037903 ENGINEER JEFFREY M. KEPICH

Signed by: Jeffrey Kepich 7C5C71DBEF914E3... 6/12/2026

ms consultants, inc.
5444 Wade Park Blvd.
Suite 160
Raleigh, NC 27607
NC License Number : C-3239

DOCUMENT NOT CONSIDERED FINAL UNLESS ALL SIGNATURES COMPLETED

REVISIONS						SHEET NO.
NO.	BY:	DATE:	NO.	BY:	DATE:	S1-10
1			3			TOTAL SHEETS
2			4			24

DRAWN BY :	J. KEPICH	DATE :	01/26
CHECKED BY :	J. PAPCIAK	DATE :	01/26
DESIGN ENGINEER OF RECORD:	J. KEPICH	DATE :	01/26

5/15/2026
c:\workdir\ncdot-pw.bentley.com_ncdot-pw-01\jeffrey kepich\d0529501\401_019_HB-0044_SMU_CS2_S1-10_040093.dgn
jkepich

Docusign Envelope ID: 99D11E6B-EAE6-8D75-8060-39096869B815

8/26/21

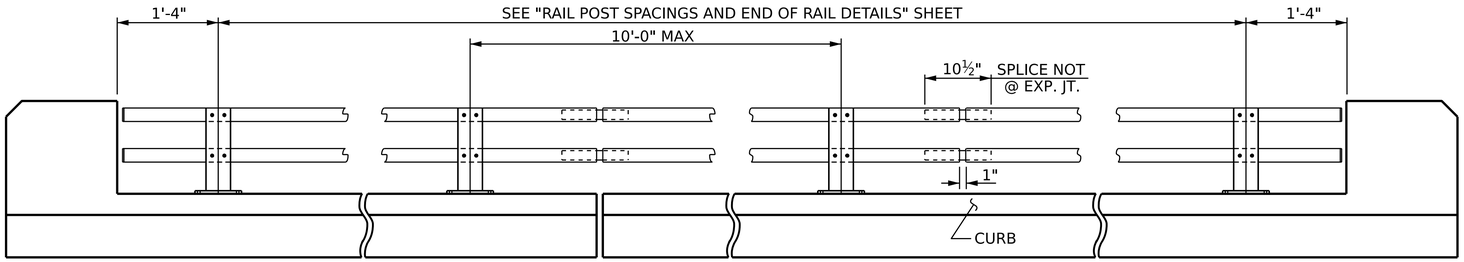

ELEVATION

NOTE : FOR ATTACHMENT OF METAL RAIL TO END POST, SEE STANDARD NO. BMR9.

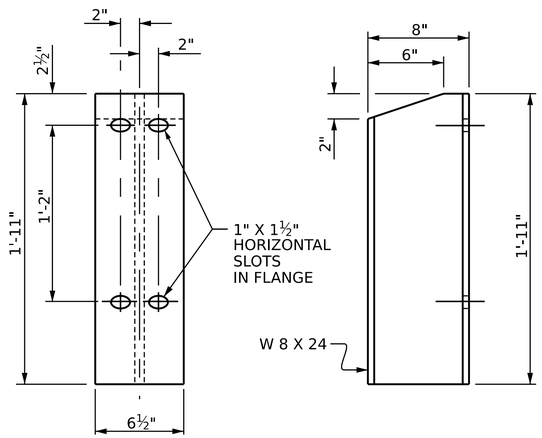

FRONT ELEVATION

SIDE ELEVATION

DETAILS OF POST

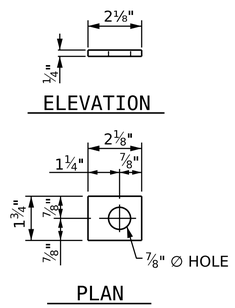

PLATE WASHER

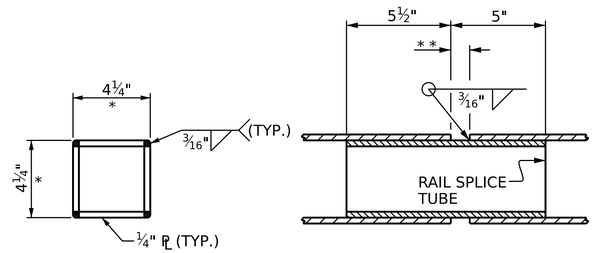

RAIL SPLICE DETAILS

* - DIMENSION AFTER GRINDING RADIUS ON CORNERS TO MATCH INSIDE OF METAL RAIL. GRIND ALL EDGES PRIOR TO GALVANIZING TO ASSURE FIT.

* * -1" FOR SPLICE NOT AT EXPANSION JOINT.

NOTES

METAL RAIL SHALL BE GALVANIZED STEEL IN ACCORDANCE WITH THE REQUIREMENTS OF THE GENERAL NOTES AND THE FOLLOWING SPECIFICATIONS. ALUMINUM RAIL WILL NOT BE AN OPTION.

GALVANIZED STEEL RAILS

MATERIAL AND GALVANIZING ARE TO CONFORM TO THE FOLLOWING SPECIFICATIONS:

POST, POST BASES, ANCHOR PLATES AND RAIL SPLICE TUBES: ASTM A36 GRADE 36 STRUCTURAL STEEL-GALVANIZED TO ASTM A123.

THE CUT ENDS OF GALVANIZED STEEL RAILING, AFTER GRINDING SMOOTH SHALL BE GIVEN TWO COATS OF ZINC RICH PAINT MEETING THE REQUIREMENTS OF FEDERAL SPECIFICATION MIL-P-26915 USAF TYPE 1, OR OF FEDERAL SPECIFICATIONS TT-P-641.

RAILS: ASTM A500 GRADE B - GALVANIZED TO ASTM A123.

WELDED RAIL STUDS: ASTM A108-GALVANIZED TO ASTM A123.

HIGH STRENGTH ANCHOR BOLTS SHALL CONFORM TO ASTM F1554 GRADE 105. HEAVY HEX NUTS SHALL CONFORM TO ASTM A563 DH, AND WASHERS TO ASTM F436,TYPE 1. ANCHOR BOLTS, NUTS AND WASHERS SHALL BE GALVANIZED TO ASTM A123.

GENERAL NOTES

RAILING SHALL BE CONTINUOUS FROM END POST TO END POST OF BRIDGE. EACH JOINT IN RAIL LENGTH SHALL BE SPLICED AS DETAILED. PANEL LENGTHS OF RAIL SHALL BE ATTACHED TO A MINIMUM OF THREE POSTS.

FOR END OF RAIL TO CLEAR FACE OF CONCRETE END POST DIMENSION, SEE STANDARD NO. BMR9.

CERTIFIED MILL REPORTS ARE REQUIRED FOR RAILS AND POSTS. SHOP INSPECTION IS NOT REQUIRED.

METAL RAIL POSTS SHALL BE SET NORMAL TO CURB GRADE.

CURVED RAIL USAGE: WHERE RAILS ARE TO BE USED ON BRIDGES ON HORIZONTAL AND/OR VERTICAL CURVATURE THE CONTRACTOR MAY, AT HIS OPTION, HAVE THE REQUIRED CURVATURE IN THE RAIL FORMED IN THE SHOP OR IN THE FIELD. IN EITHER EVENT, THE RAIL SHALL CONFORM WITHOUT BUCKLING OR KINKING TO THE REQUIRED CURVATURE IN A UNIFORM MANNER ACCEPTABLE TO THE ENGINEER.

TO INSURE FUTURE IDENTIFICATION OF THE FABRICATOR, A PERMANENT IDENTIFYING MARK SHALL BE PLACED ON EACH POST. THE METHOD OF MARKING AND LOCATION SHALL BE SUCH THAT IT DOES NOT DETRACT FROM THE APPEARANCE OF THE POST, BUT REMAINS VISIBLE AFTER RAIL PLACEMENT.

SHIMS SHALL BE USED AS NECESSARY FOR POST ALIGNMENT.

GROOVED CONTRACTION JOINTS,½" IN DEPTH, SHALL BE TOOLED IN ALL EXPOSED FACES OF THE CURB AND IN ACCORDANCE WITH ARTICLE 825-10(B) OF THE STANDARD SPECIFICATIONS. A CONTRACTION JOINT SHALL BE LOCATED AT EACH THIRD POINT BETWEEN CURB EXPANSION JOINTS. ONLY ONE CONTRACTION JOINT IS REQUIRED AT MIDPOINT OF CURB SEGMENTS LESS THAN 20 FEET IN LENGTH AND NO CONTRACTION JOINTS ARE REQUIRED FOR THOSE SEGMENTS LESS THAN 10 FEET IN LENGTH.

THE RAIL SECTIONS SHALL BE ATTACHED TO THE POSTS BY TWO THREADED ¾" ∅ WELDED STUDS, PLATE WASHERS, LOCKWASHERS, AND NUTS.

FOR 32" ALASKA RAIL, SEE THE STANDARD SPECIFICATIONS.

METAL RAIL LENGTH 205.25 LIN. FT.

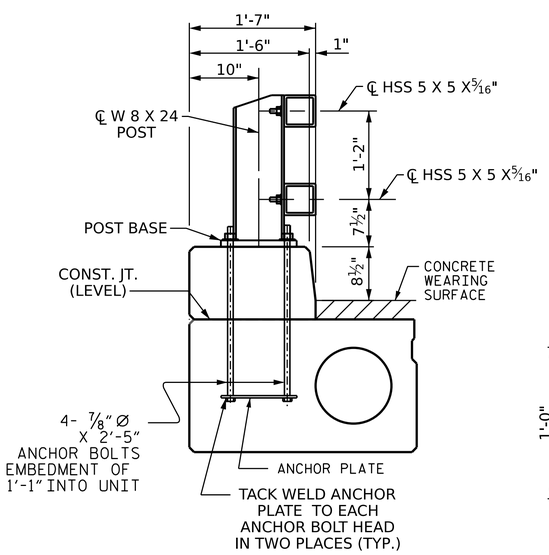

SECTION THUR RAIL

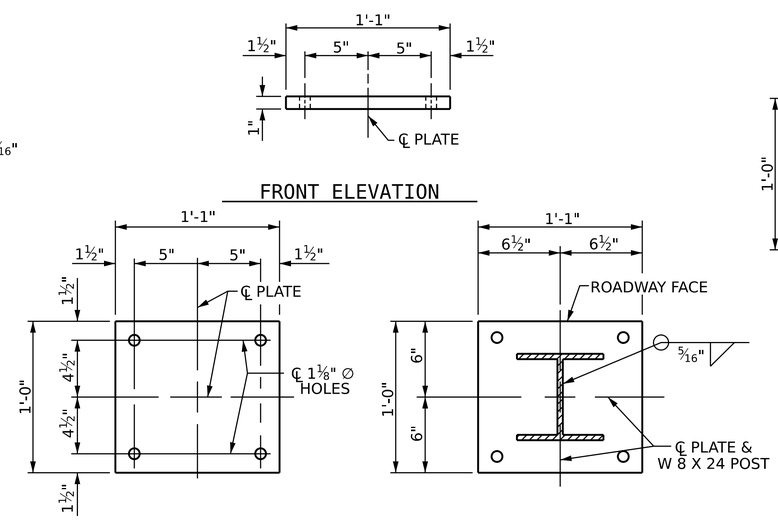

POST BASE DETAILS

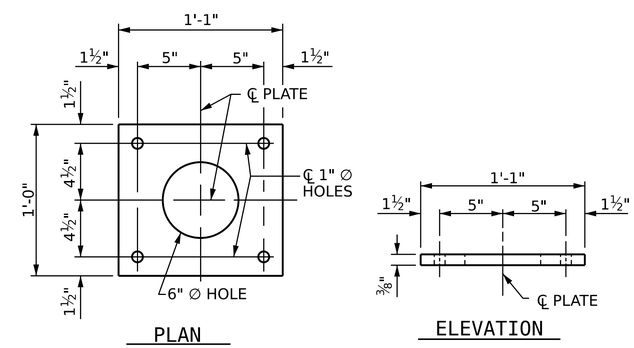

ANCHOR PLATE DETAILS

PROJECT NO. HB-0044

ASHE COUNTY

STATION: 13+57.00 -L-

SHEET 1 OF 3

STATE OF NORTH CAROLINA
DEPARTMENT OF TRANSPORTATION
RALEIGH

STANDARD

32" ALASKA RAIL

NORTH CAROLINA PROFESSIONAL SEAL 037903 ENGINEER JEFFREY M. KEPICH

Signed by: Jeffrey Kepich 7C5C71DBEF914E3...
6/12/2026

ms consultants, inc.
5444 Wade Park Blvd.
Suite 160
Raleigh, NC 27607
NC License Number : C-3239

DOCUMENT NOT CONSIDERED FINAL UNLESS ALL SIGNATURES COMPLETED

REVISIONS								SHEET NO.
NO.	BY:	DATE:	NO.	BY:	DATE:			S1-11
1			3					TOTAL SHEETS
2			4					24

ASSEMBLED BY:	J. KEPICH	DATE :	01/2026
CHECKED BY :	J. PAPCIAK	DATE :	01/2026

DRAWN BY :	RWW	7/14	REV. 12/17	MAA/THC
CHECKED BY :	TMG	7/14	REV. 5/18	MAA/THC
			REV. 10/23	BNB/SNM

5/15/2026
c:\workdir\ncdot-pw.bentley.com_ncdot-pw-01\jeffrey kepich\d0529501\401_021_HB-0044_SMU_AR_S1-11_040093.dgn
jkepich

STD. NO. BMR8 Sht. 1

Docusign Envelope ID: 99D11E6B-EAE6-8D75-8060-39096869B815

8/26/21

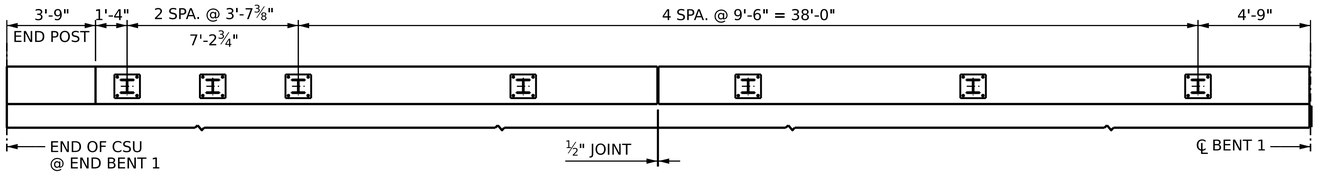

SPAN A

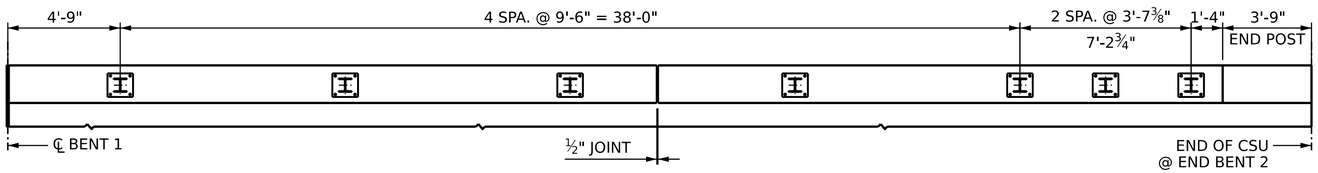

SPAN B

PART PLAN OF RAIL POST SPACINGS

(LEFT RAIL SHOWN, RIGHT RAIL SIMILAR)

NOTES

STRUCTURAL CONCRETE INSERT

EACH STRUCTURAL CONCRETE INSERT ASSEMBLY SHALL CONSIST OF THE FOLLOWING COMPONENTS:

A. FERRULE SHALL BE MADE FROM STEEL MEETING THE REQUIREMENTS OF AASHTO M169, GRADE 12L14 AND SHALL HAVE A MINIMUM LENGTH OF THREADS OF 1½".

B. 1 - ¾" ∅ x 1⅝" BOLT WITH WASHER. BOLT SHALL CONFORM TO THE REQUIREMENTS OF ASTM A307. BOLT AND WASHER SHALL BE GALVANIZED. (AT THE CONTRACTOR'S OPTION, STAINLESS STEEL BOLT AND WASHER MAY BE USED AS AN ALTERNATE FOR THE ¾" ∅ x 1⅝" GALVANIZED BOLT AND WASHER. THEY SHALL CONFORM TO OR EXCEED THE MECHANICAL REQUIREMENTS OF ASTM A307. THE USE OF THIS ALTERNATE SHALL BE APPROVED BY THE ENGINEER.)

C. WIRE STRUT SHOWN IN THE STRUCTURAL CONCRETE INSERT DETAIL IS THE MINIMUM ALLOWABLE SIZE AND SHALL HAVE A MINIMUM TENSILE STRENGTH OF 100,000 PSI. AS AN OPTION, A 7/16" ∅ WIRE STRUT WITH A MINIMUM TENSILE STRENGTH OF 90,000 PSI IS ACCEPTABLE.

NOTES

METAL RAIL TO END POST CONNECTION

EACH METAL RAIL TO END POST CONNECTION SHALL CONSIST OF THE FOLLOWING COMPONENTS:

A. ½" METAL BRACKET PLATE AND ¼" METAL RAIL INSERT TUBE SHALL CONFORM TO AASHTO ASTM A36 GRADE 36 AND SHALL BE GALVANIZED AFTER FABRICATION TO ASTM A123.

B. ¾" STRUCTURAL CONCRETE INSERTS SHALL HAVE A WORKING LOAD SHEAR CAPACITY OF 4800 LBS. THE FERRULES SHALL ENGAGE A ¾" ∅ x 1⅝" BOLT WITH 2'' O.D. WASHER IN PLACE. THE ¾" ∅ x 1⅝" BOLT SHALL HAVE N. C. THREADS.

THE ¾" STRUCTURAL CONCRETE INSERTS WITH BOLTS SHALL BE ASSEMBLED IN THE SHOP.

THE COST OF THE ¾" STRUCTURAL CONCRETE INSERT, THE ½" BRACKET PLATES, AND THE RAIL INSERT TUBES COMPLETE IN PLACE SHALL BE INCLUDED IN THE VARIOUS PAY ITEMS.

THE CONTRACTOR, AT HIS OPTION, MAY USE AN ADHESIVE BONDING SYSTEM IN LIEU OF THE STRUCTURAL CONCRETE INSERT EMBEDDED IN THE END POST. IF THE ADHESIVE BONDING SYSTEM IS USED, THE ¾" ∅ x 1⅝" BOLTS WITH WASHERS SHALL BE REPLACED WITH ¾" ∅ x 6½" BOLTS AND 2'' O.D. WASHERS. ALL SPECIFICATIONS THAT APPLY TO THE ¾" ∅ x 1⅝" BOLTS SHALL APPLY TO THE ¾" ∅ x 6½" BOLTS. FIELD TESTING OF THE ADHESIVE BONDING SYSTEM IS NOT REQUIRED.

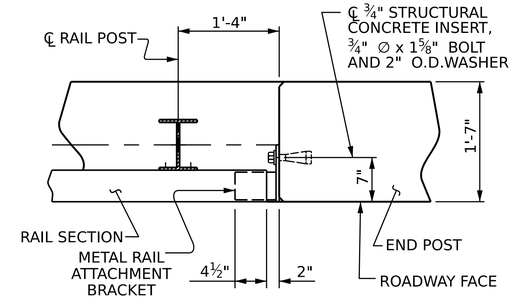

PLAN - RAILS AND END POST

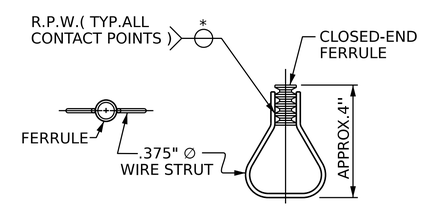

STRUCTURAL CONCRETE INSERT

* EACH WELDED ATTACHMENT OF WIRE TO FERRULE SHALL DEVELOP THE TENSILE STRENGTH OF THE WIRE.

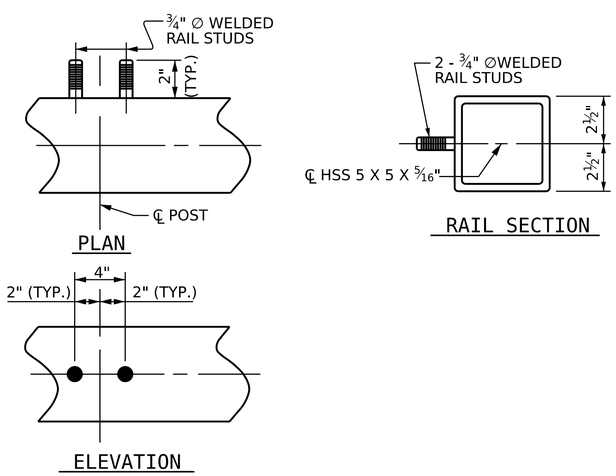

RAIL STUD DETAILS

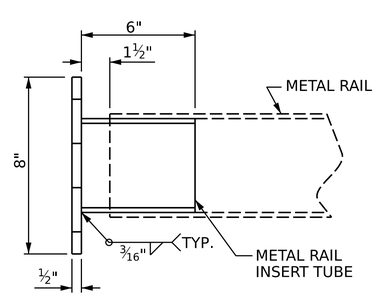

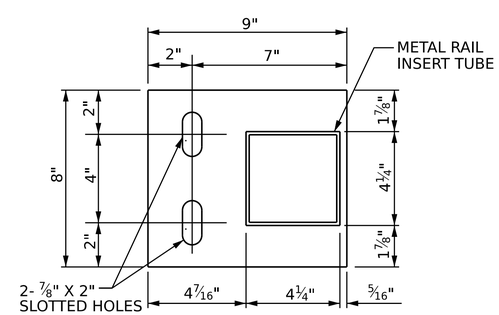

METAL RAIL ATTACHMENT BRACKET

THE METAL RAIL INSERT TUBE SHALL BE FABRICATED FROM ¼" PLATES.

PROJECT NO. HB-0044

ASHE COUNTY

STATION: 13+57.00 -L-

SHEET 2 OF 3

STATE OF NORTH CAROLINA
DEPARTMENT OF TRANSPORTATION
RALEIGH

STANDARD

RAIL POST SPACINGS AND END OF RAIL DETAILS

FOR 32" ALASKA RAIL

NORTH CAROLINA PROFESSIONAL SEAL 037903 ENGINEER JEFFREY M. KEPICH

Signed by: Jeffrey Kepich 7C5C71DBEF914E3... 6/12/2026

ms consultants, inc.
5444 Wade Park Blvd.
Suite 160
Raleigh, NC 27607
NC License Number : C-3239

DOCUMENT NOT CONSIDERED FINAL UNLESS ALL SIGNATURES COMPLETED

REVISIONS								SHEET NO.
NO.	BY:	DATE:	NO.	BY:	DATE:			S1-12
1			3					TOTAL SHEETS
2			4					24

ASSEMBLED BY:	J. KEPICH	DATE :	01/2026
CHECKED BY :	J. PAPCIAK	DATE :	01/2026
DRAWN BY : RWW 7/14	REV. 12/17	MAA/THC	
CHECKED BY : TMG 7/14	REV. 5/18	MAA/THC	
	REV. 10/23	BNB/SNM	

5/15/2026
c:\workdir\ncdot-pw.bentley.com_ncdot-pw-01\jeffrey kepich\d0529501\401_023_HB-0044_SMU_AR2_S1-12_040093.dgn
jkepich

STD. NO. BMR9

Docusign Envelope ID: 99D11E6B-EAE6-8D75-8060-39096869B815

8/26/21

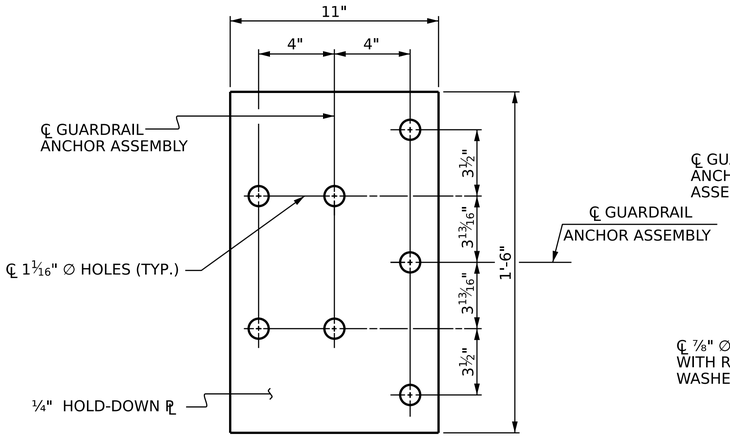

PLAN

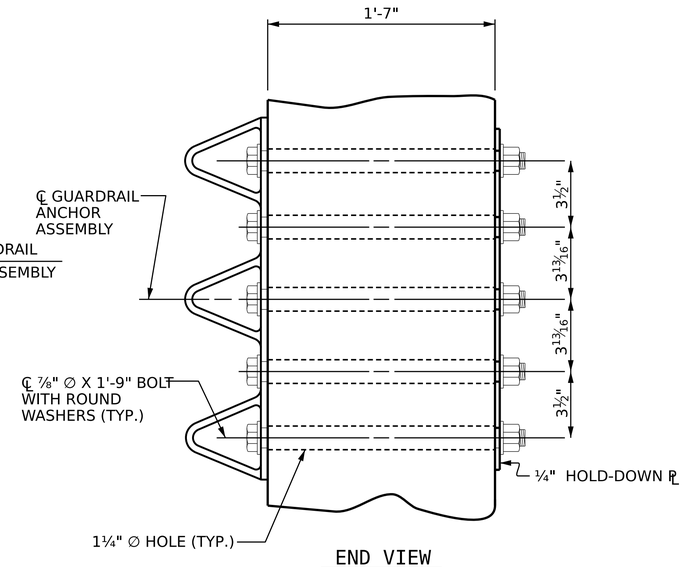

END VIEW

GUARDRAIL ANCHOR ASSEMBLY DETAILS

NOTES

THE GUARDRAIL ANCHOR ASSEMBLY SHALL CONSIST OF A ¼" HOLD DOWN PLATE AND 7 - ⅞" ∅ BOLTS WITH NUTS AND WASHERS.

THE HOLD-DOWN PLATE SHALL CONFORM TO AASHTO M270 GRADE 36. AFTER FABRICATION, THE HOLD-DOWN PLATE SHALL BE HOT-DIP GALVANIZED IN ACCORDANCE WITH AASHTO M111.

BOLTS SHALL CONFORM TO THE REQUIREMENTS OF ASTM A307 AND NUTS SHALL CONFORM TO THE REQUIREMENTS OF AASHTO M291. BOLTS, NUTS AND WASHERS SHALL BE GALVANIZED. AT THE CONTRACTOR'S OPTION, STAINLESS STEEL BOLTS, NUTS AND WASHERS MAY BE USED AS AN ALTERNATE FOR THE ⅞" ∅ GALVANIZED BOLTS, NUTS AND WASHERS. THEY SHALL CONFORM TO OR EXCEED THE MECHANICAL REQUIREMENTS OF ASTM A307. THE USE OF THIS ALTERNATE SHALL BE APPROVED BY THE ENGINEER.

THE GUARDRAIL ANCHOR ASSEMBLY IS REQUIRED AT ALL POINTS WHERE APPROACH GUARDRAIL IS TO BE ATTACHED TO THE END OF THE PARAPET. FOR POINTS OF ATTACHMENT, SEE SKETCH.

AFTER INSTALLATION, THE EXPOSED THREAD OF THE BOLT SHALL BE BURRED WITH A SHARP POINTED TOOL.

THE COST OF THE GUARDRAIL ANCHOR ASSEMBLIES WITH BOLTS, NUTS AND WASHERS COMPLETE IN PLACE, SHALL BE INCLUDED IN THE VARIOUS PAY ITEMS.

THE VERTICAL REINFORCING BARS MAY BE SHIFTED SLIGHTLY IN THE END POST TO CLEAR ASSEMBLY BOLTS.

THE 1 ¼" ∅ HOLES SHALL BE FORMED OR DRILLED WITH A CORE BIT. IMPACT TOOLS WILL NOT BE PERMITTED. ANY CONCRETE DAMAGED BY THIS WORK SHALL BE REPAIRED TO THE SATISFACTION OF THE ENGINEER.

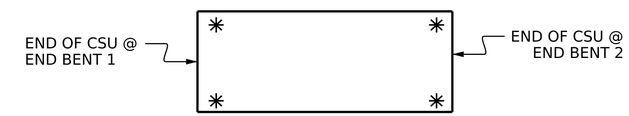

SKETCH SHOWING POINTS OF ATTACHMENT

* LOCATION OF GUARDRAIL ATTACHMENT

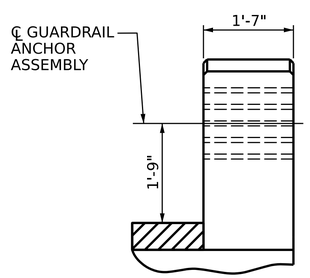

END VIEW
(32" ALASKA RAIL)

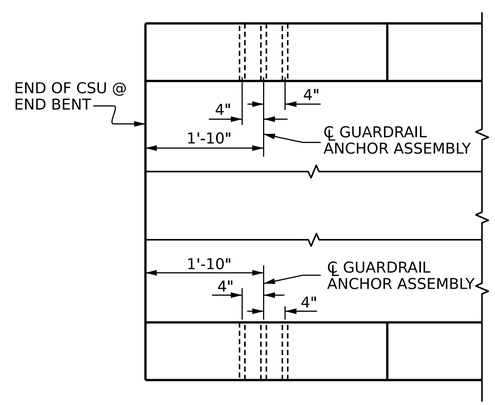

PLAN

LOCATION OF GUARDRAIL ANCHOR AT END POST

PROJECT NO. HB-0044
ASHE COUNTY
STATION: 13+57.00 -L-

SHEET 3 OF 3

STATE OF NORTH CAROLINA
DEPARTMENT OF TRANSPORTATION
RALEIGH
STANDARD

GUARDRAIL ANCHORAGE DETAILS FOR METAL RAILS

NORTH CAROLINA PROFESSIONAL SEAL 037903 ENGINEER JEFFREY M KEPICH
Signed by: Jeffrey Kepich 7C5C71DBEF914E3... 6/12/2026

ms consultants, inc.
5444 Wade Park Blvd.
Suite 160
Raleigh, NC 27607
NC License Number : C-3239

DOCUMENT NOT CONSIDERED FINAL UNLESS ALL SIGNATURES COMPLETED

REVISIONS						SHEET NO.
NO.	BY:	DATE:	NO.	BY:	DATE:	S1-13
1			3			TOTAL SHEETS
2			4			24

ASSEMBLED BY:		J. KEPICH	DATE :		01/2026
CHECKED BY :		J. PAPCIAK	DATE :		01/2026
DRAWN BY :	MAA	5/10	REV.	1/15	MAA/TMG
CHECKED BY :	GM	5/10	REV.	12/17	MAA/THC
			REV.	5/18	MAA/THC

5/15/2026
c:\workdir\ncdot-pw.bentley.com_ncdot-pw-01\jeffrey kepich\d0529501\401_025_HB-0044_SMU_GR_S1-13_040093.dgn
jkepich

STD. GRA3 Sht.3

Docusign Envelope ID: 99D11E6B-EAE6-8D75-8060-39096869B815

8/26/21

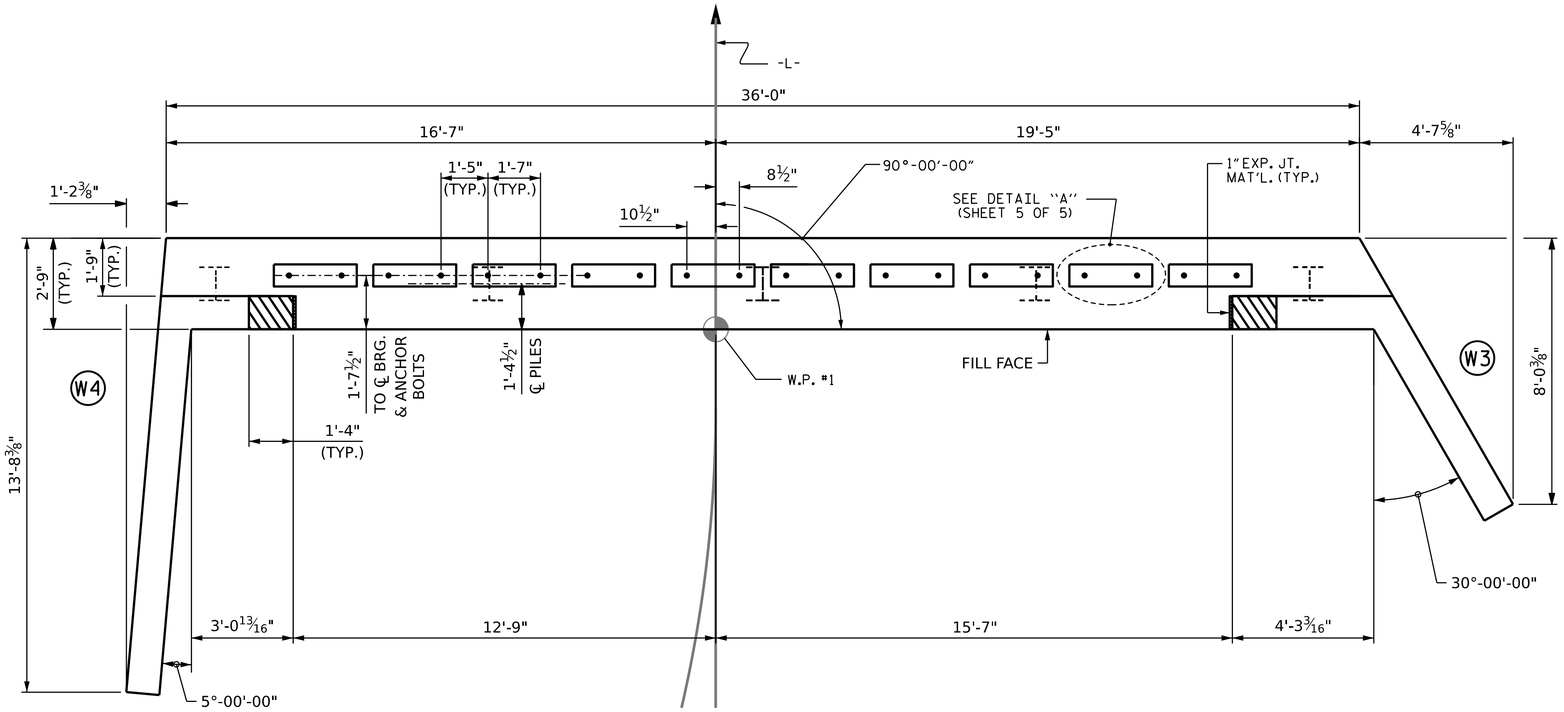

PLAN

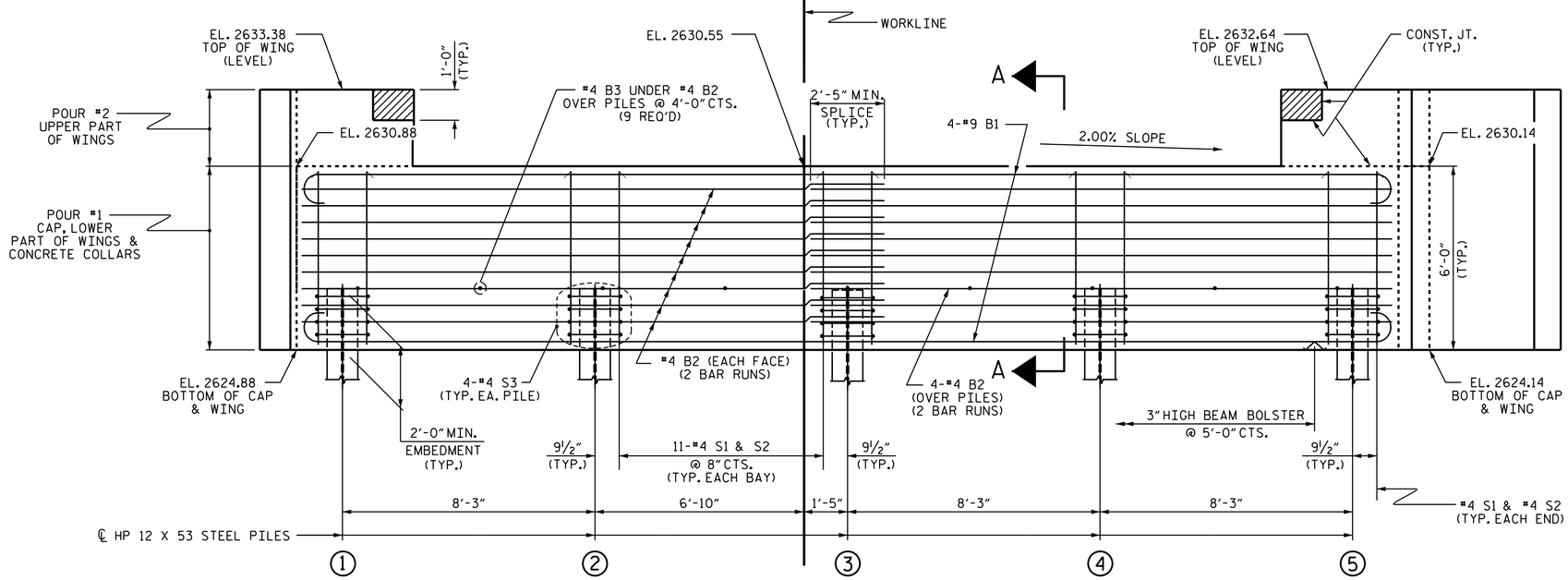

ELEVATION

WINGS NOT SHOWN FOR CLARITY.
FOR SECTION A-A, SEE SHEET 5 OF 5.
CONCRETE COLLARS FOR STEEL PILES NOT SHOWN IN PLAN AND ELEVATION VIEWS FOR CLARITY.
SEE "CORROSION PROTECTION FOR STEEL PILES DETAIL", SHEET 5 OF 5.

NOTES

STIRRUPS IN CAP MAY BE SHIFTED AS NECESSARY TO CLEAR SWEDGE ANCHOR BOLTS.

THE CONCRETE IN THE SHADED AREA OF THE WING SHALL BE POURED AFTER THE VERTICAL CONCRETE BARRIER RAIL IS CAST IF SLIP FORMING IS USED.

FOR PILE SPLICE DETAILS, SEE SHEET 5 OF 5.

FOR WING DETAILS, SEE SHEETS 3 AND 4 OF 5.

SWEDGE ANCHOR BOLTS SHALL MEET THE REQUIREMENTS OF ASTM A449. ANCHOR PLATES, WASHERS, AND NUTS SHALL MEET THE REQUIREMENTS OF THE STANDARD SPECIFICATIONS. ANCHOR BOLTS, ANCHOR PLATES, WASHERS, AND NUTS SHALL BE GALVANIZED IN ACCORDANCE WITH THE STANDARD SPECIFICATIONS.

NO SEPARATE PAYMENT SHALL BE MADE FOR THE SWEDGE ANCHOR BOLTS, ANCHOR PLATES, WASHERS, AND NUTS. THE COST OF THE MATERIAL AND INSTALLATION SHALL BE CONSIDERED INCIDENTAL TO VARIOUS PAY ITEMS.

TOP OF PILE ELEVATIONS	
1	2626.85
2	2626.69
3	2626.52
4	2626.36
5	2626.19

PROJECT NO. HB-0044
ASHE COUNTY
STATION: 13+57.00 -L-

SHEET 1 OF 6

STATE OF NORTH CAROLINA
DEPARTMENT OF TRANSPORTATION
RALEIGH

SUBSTRUCTURE

END BENT No. 1

ASSEMBLED BY:	J. KEPICH	DATE :	01/2026
CHECKED BY :	J. PAPCIAK	DATE :	01/2026
DRAWN BY :	WJH 12/11	REV. 4/15	MAA/TMG
CHECKED BY :	AAC 12/11		

ms consultants, inc.
5444 Wade Park Blvd.
Suite 160
Raleigh, NC 27607
NC License Number : C-3239

NORTH CAROLINA PROFESSIONAL SEAL 037903 ENGINEER JEFFREY M. KEPICH
Signed by: Jeffrey Kepich 7C5C71DBEF914E3... 6/12/2026

DOCUMENT NOT CONSIDERED FINAL UNLESS ALL SIGNATURES COMPLETED

REVISIONS								
NO.	BY:	DATE:	NO.	BY:	DATE:	SHEET NO.		
1			3			S1-14		
2			4			TOTAL SHEETS		
						24		

5/15/2026
c:\workdir\ncdot-pw.bentley.com_ncdot-pw-01\jeffrey kepich\d0529501\401_027_HB-0044_SMU_E1_S1-14_040093.dgn
jkepich

(ALTERED) STD. NO. EB_30_90S4

Docusign Envelope ID: 99D11E6B-EAE6-8D75-8060-39096869B815

8/26/21

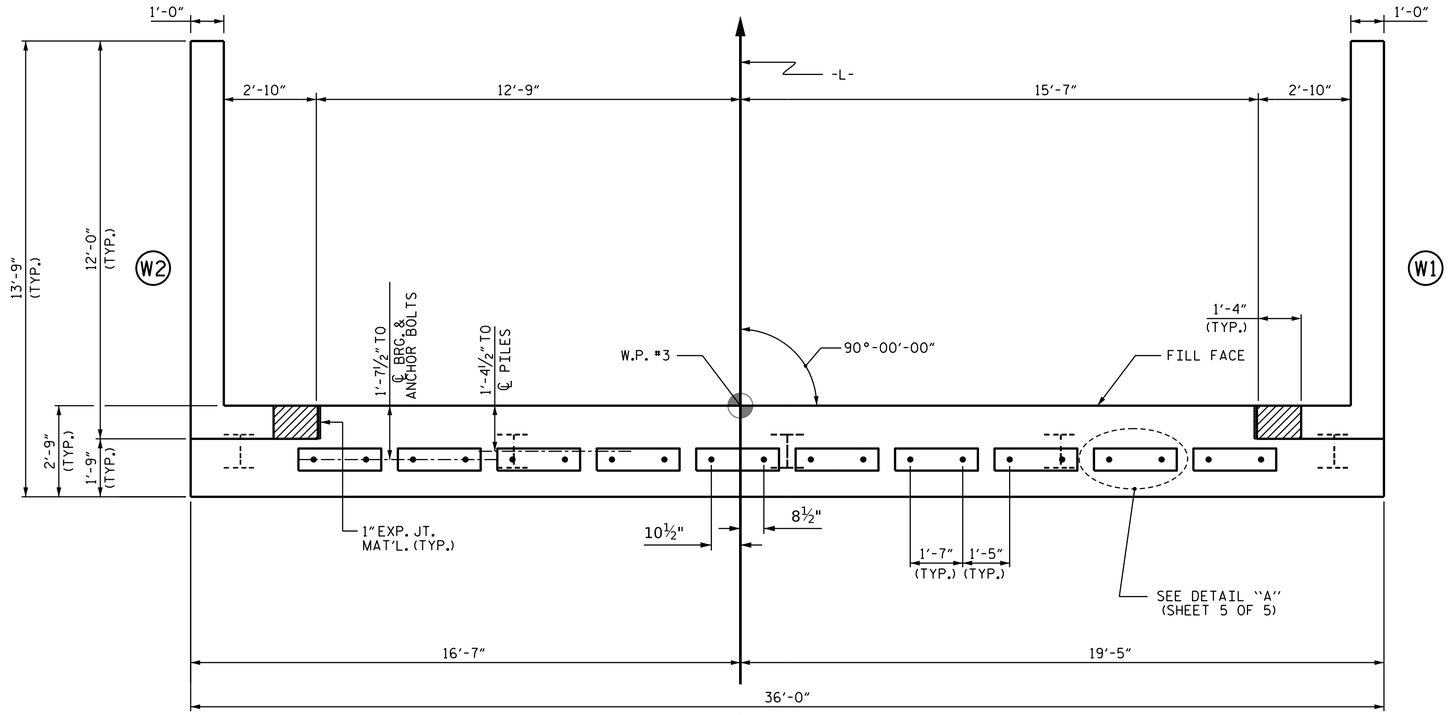

PLAN

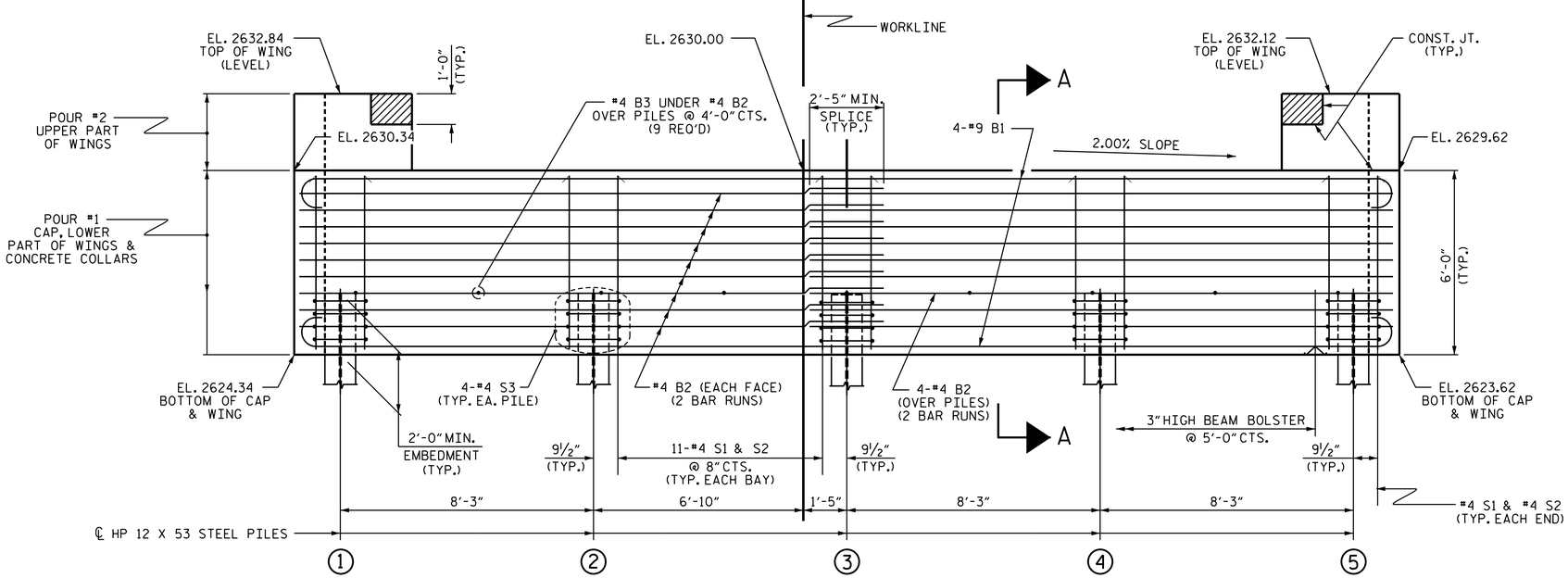

ELEVATION

WINGS NOT SHOWN FOR CLARITY.
FOR SECTION A-A, SEE SHEET 5 OF 5.
CONCRETE COLLARS FOR STEEL PILES NOT SHOWN IN PLAN AND ELEVATION VIEWS FOR CLARITY.
SEE "CORROSION PROTECTION FOR STEEL PILES DETAIL", SHEET 5 OF 5.

NOTES

STIRRUPS IN CAP MAY BE SHIFTED AS NECESSARY TO CLEAR SWEDGE ANCHOR BOLTS.

THE CONCRETE IN THE SHADED AREA OF THE WING SHALL BE POURED AFTER THE VERTICAL CONCRETE BARRIER RAIL IS CAST IF SLIP FORMING IS USED.

FOR PILE SPLICE DETAILS, SEE SHEET 5 OF 5.

FOR WING DETAILS, SEE SHEET 3 OF 5.

SWEDGE ANCHOR BOLTS SHALL MEET THE REQUIREMENTS OF ASTM A449. ANCHOR PLATES, WASHERS, AND NUTS SHALL MEET THE REQUIREMENTS OF THE STANDARD SPECIFICATIONS. ANCHOR BOLTS, ANCHOR PLATES, WASHERS, AND NUTS SHALL BE GALVANIZED IN ACCORDANCE WITH THE STANDARD SPECIFICATIONS.

NO SEPARATE PAYMENT SHALL BE MADE FOR THE SWEDGE ANCHOR BOLTS, ANCHOR PLATES, WASHERS, AND NUTS. THE COST OF THE MATERIAL AND INSTALLATION SHALL BE CONSIDERED INCIDENTAL TO VARIOUS PAY ITEMS.

TOP OF PILE ELEVATIONS	
1	2626.31
2	2626.14
3	2625.98
4	2625.81
5	2625.65

PROJECT NO. HB-0044
ASHE COUNTY
STATION: 13+57.00 -L-

SHEET 2 OF 6

STATE OF NORTH CAROLINA
DEPARTMENT OF TRANSPORTATION
RALEIGH

SUBSTRUCTURE

END BENT No. 2

NORTH CAROLINA PROFESSIONAL SEAL 037903 ENGINEER JEFFREY M KEPICH
Signed by: Jeffrey Kepich 7C5C71DBEF914E3...
6/12/2026

DOCUMENT NOT CONSIDERED FINAL UNLESS ALL SIGNATURES COMPLETED

ms consultants, inc.
5444 Wade Park Blvd.
Suite 160
Raleigh, NC 27607
NC License Number : C-3239

REVISIONS								SHEET NO.
NO.	BY:	DATE:	NO.	BY:	DATE:			S1-15
1			3					TOTAL SHEETS
2			4					24

ASSEMBLED BY:	J. KEPICH	DATE :	01/2026
CHECKED BY :	J. PAPCIAK	DATE :	01/2026
DRAWN BY :	WJH 12/11	REV. 4/15	MAA/TMG
CHECKED BY :	AAC 12/11		

5/15/2026
c:\workdir\ncdot-pw.bentley.com_ncdot-pw-01\jeffrey kepich\d0529501\401_029_HB-0044_SMU_E2_S1-15_040093.dgn
jkepich

(ALTERED) STD. NO. EB_30_90S4

Docusign Envelope ID: 99D11E6B-EAE6-8D75-8060-39096869B815

8/26/21

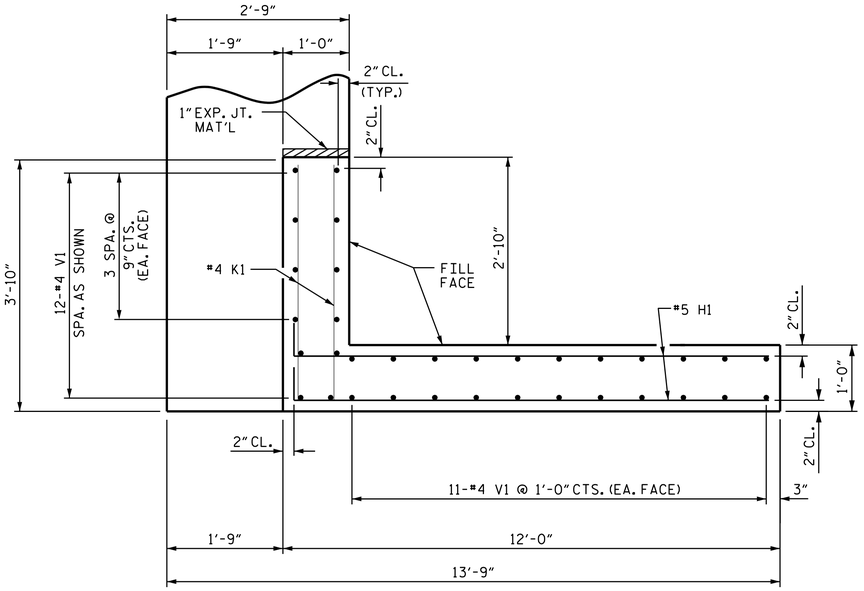

PLAN OF WING (W1)

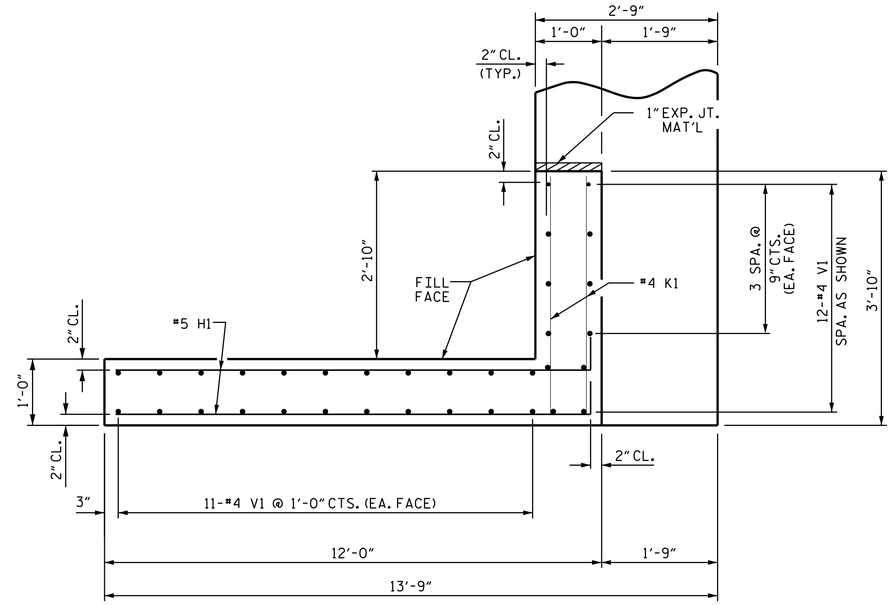

PLAN OF WING (W2)

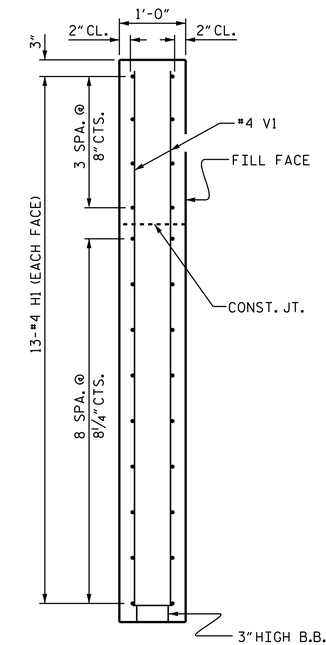

SECTION X-X

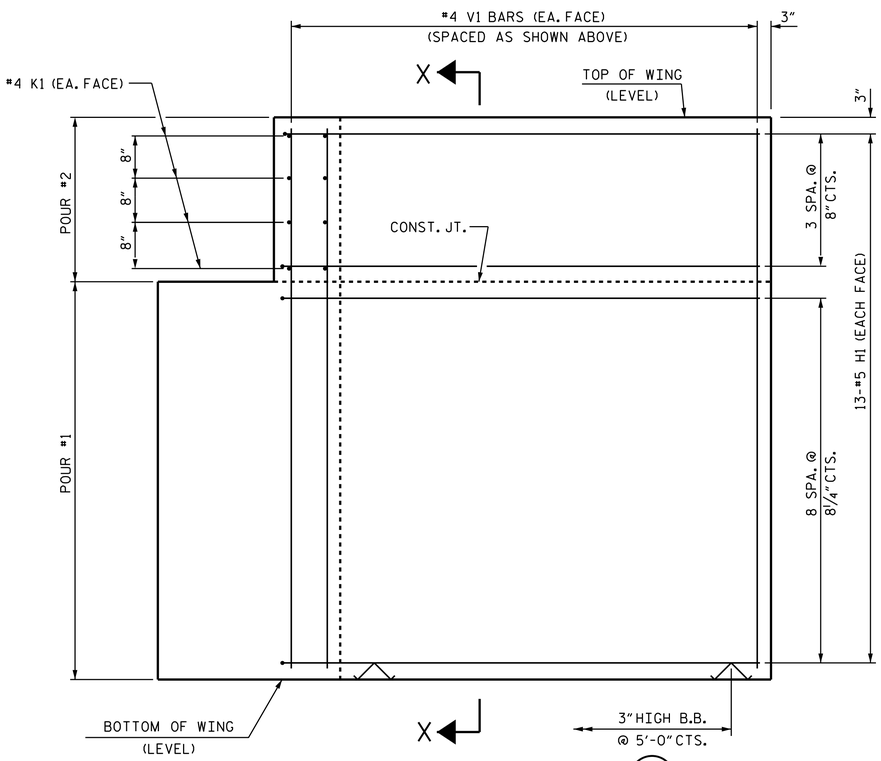

ELEVATION OF WING (W1)

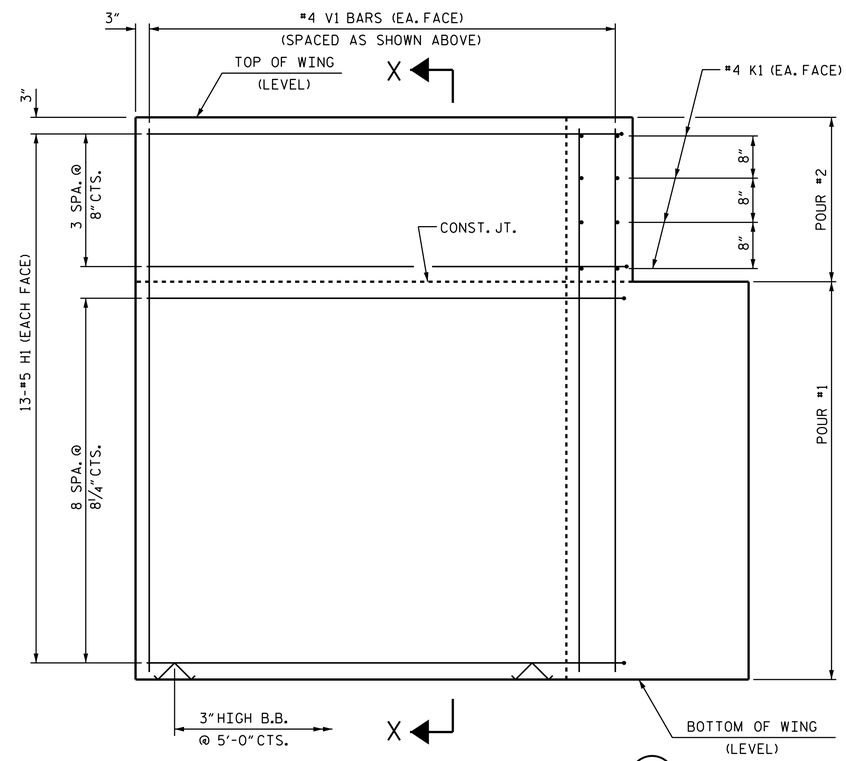

ELEVATION OF WING (W2)

WING DETAILS

PROJECT NO. HB-0044

ASHE COUNTY

STATION: 13+57.00 -L-

SHEET 3 OF 6

STATE OF NORTH CAROLINA
DEPARTMENT OF TRANSPORTATION
RALEIGH

SUBSTRUCTURE

END BENT
WING DETAILS

ASSEMBLED BY:	J. KEPICH	DATE :	01/2026
CHECKED BY :	J. PAPCIAK	DATE :	01/2026
DRAWN BY : WJH 12/11	REV. 4/15	MAA/TMG	
CHECKED BY : AAC 12/11			

ms consultants, inc.
5444 Wade Park Blvd.
Suite 160
Raleigh, NC 27607
NC License Number : C-3239

NORTH CAROLINA PROFESSIONAL SEAL 037903 ENGINEER JEFFREY M KEPICH

Signed by: Jeffrey Kepich 7C5C71DBEF914E3... 6/12/2026

DOCUMENT NOT CONSIDERED FINAL UNLESS ALL SIGNATURES COMPLETED

REVISIONS						SHEET NO.
NO.	BY:	DATE:	NO.	BY:	DATE:	S1-16
1			3			TOTAL SHEETS
2			4			24

5/15/2026
c:\workdir\ncdot-pw.bentley.com_ncdot-pw-01\jeffrey kepich\d0529501\401_031_HB-0044_SMU_E3_S1-16_040093.dgn
jkepich

(ALTERED) STD. NO. EB_30_90S4

Docusign Envelope ID: 99D11E6B-EAE6-8D75-8060-39096869B815

8/26/21

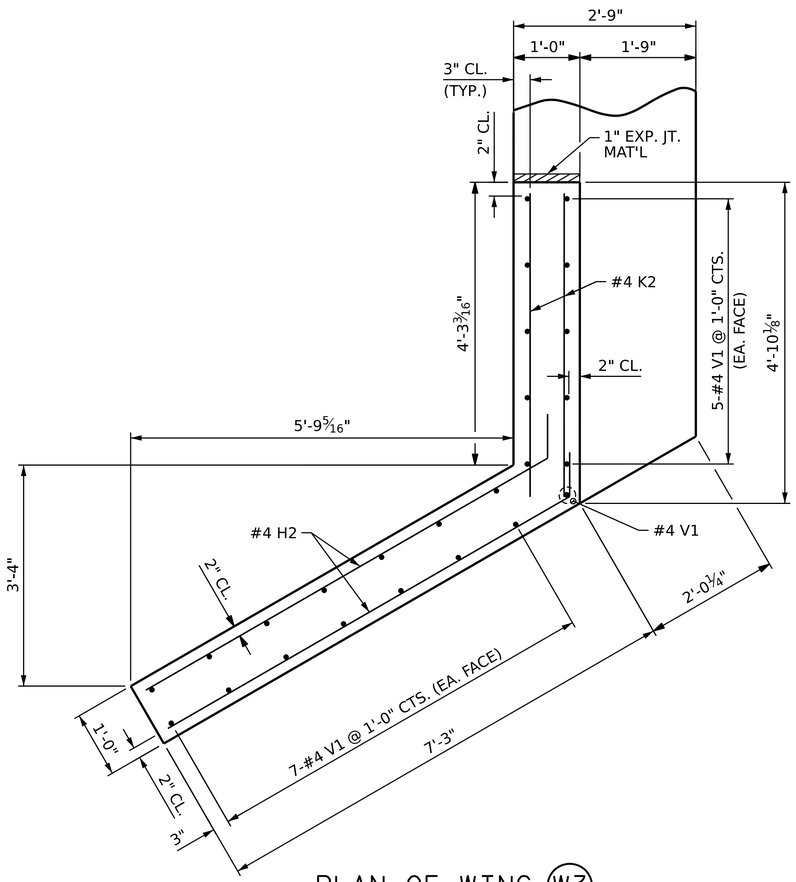

PLAN OF WING (W3)

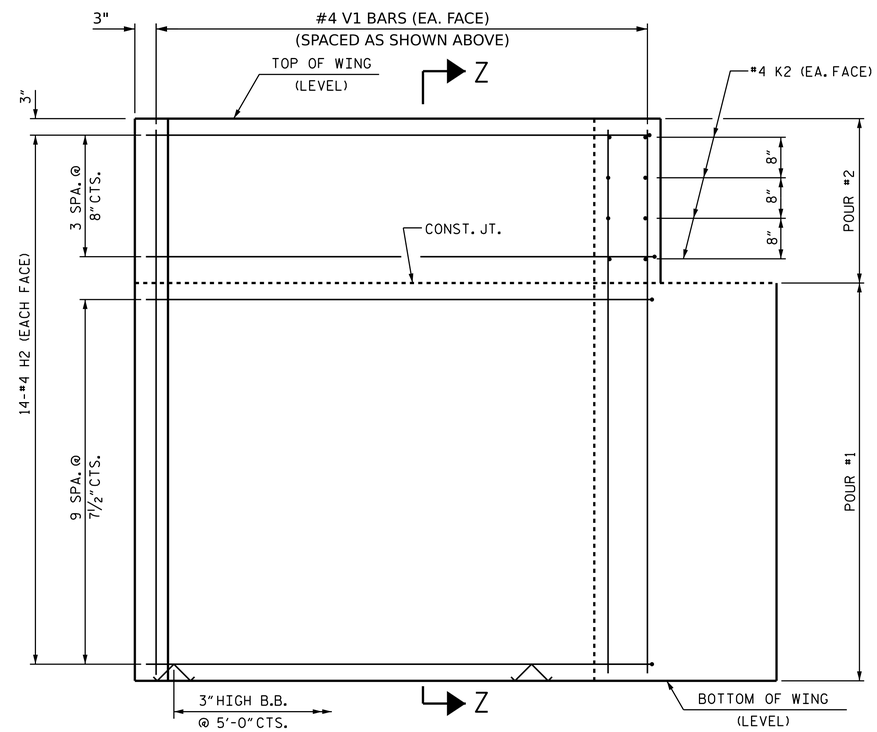

ELEVATION OF WING (W3)

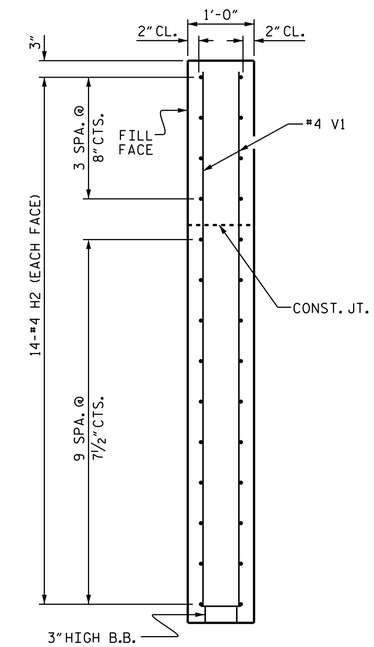

SECTION Z-Z

PROJECT NO. HB-0044

ASHE COUNTY

STATION: 13+57.00 -L-

SHEET 4 OF 6

STATE OF NORTH CAROLINA
DEPARTMENT OF TRANSPORTATION
RALEIGH

SUBSTRUCTURE

END BENT
WING DETAILS

NORTH CAROLINA PROFESSIONAL SEAL 037903 ENGINEER JEFFREY M. KEPICH

Signed by: Jeffrey Kepich 7C5C710BEF914E3...
6/12/2026

ms consultants, inc.
5444 Wade Park Blvd.
Suite 160
Raleigh, NC 27607
NC License Number : C-3239

DOCUMENT NOT CONSIDERED FINAL UNLESS ALL SIGNATURES COMPLETED

REVISIONS						
NO.	BY:	DATE:	NO.	BY:	DATE:	
1			3			
2			4			

SHEET NO. S1-17

TOTAL SHEETS 24

DRAWN BY :	J. KEPICH	DATE :	01/26
CHECKED BY :	J. PAPCIAK	DATE :	01/26
DESIGN ENGINEER OF RECORD:	J. KEPICH	DATE :	01/26

5/15/2026
c:\workdir\ncdot-pw.bentley.com_ncdot-pw-01\jeffrey kepich\d0529501\401_033_HB-0044_SMU_E4_S1-17_040093.dgn
jkepich

Docusign Envelope ID: 99D11E6B-EAE6-8D75-8060-39096869B815

8/26/21

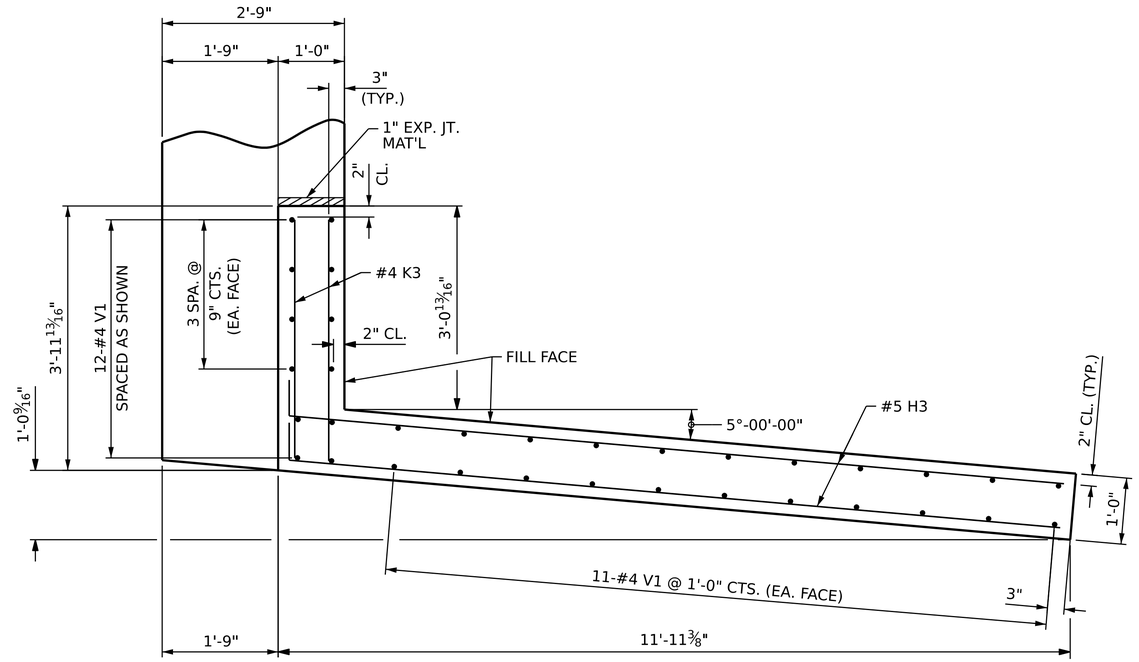

PLAN OF WING (W4)

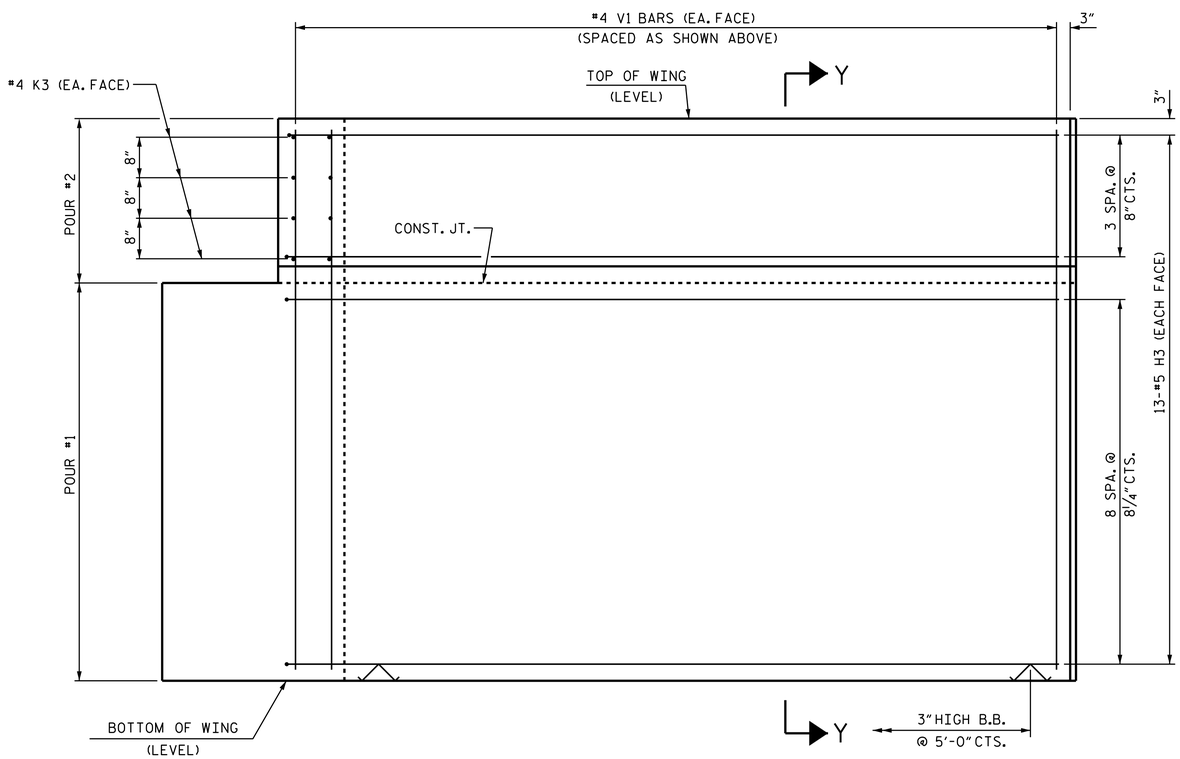

ELEVATION OF WING (W4)

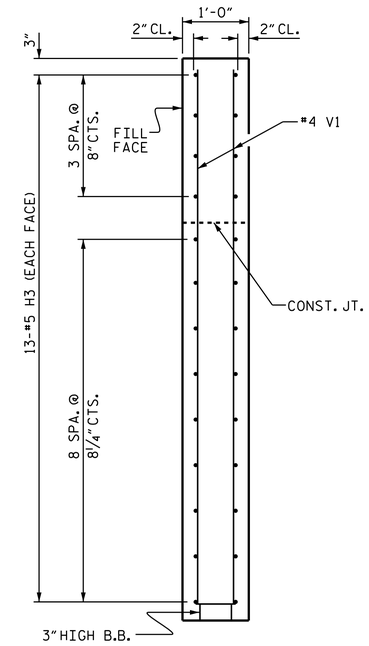

SECTION Y-Y

PROJECT NO. HB-0044

ASHE COUNTY

STATION: 13+57.00 -L-

SHEET 5 OF 6

STATE OF NORTH CAROLINA
DEPARTMENT OF TRANSPORTATION
RALEIGH

SUBSTRUCTURE

END BENT
WING DETAILS

NORTH CAROLINA PROFESSIONAL SEAL 037903 ENGINEER JEFFREY M. KEPICH

Signed by: Jeffrey Kepich 7C5C710BEF914E3... 6/12/2026

ms consultants, inc.
5444 Wade Park Blvd.
Suite 160
Raleigh, NC 27607
NC License Number : C-3239

DOCUMENT NOT CONSIDERED FINAL UNLESS ALL SIGNATURES COMPLETED

REVISIONS							SHEET NO.
NO.	BY:	DATE:	NO.	BY:	DATE:		S1-18
1			3				TOTAL SHEETS
2			4				24

DRAWN BY :	J. KEPICH	DATE :	01/26
CHECKED BY :	J. PAPCIAK	DATE :	01/26
DESIGN ENGINEER OF RECORD:	J. KEPICH	DATE :	01/26

5/15/2026
c:\workdir\ncdot-pw.bentley.com_ncdot-pw-01\jeffrey kepich\d0529501\401_035_HB-0044_SMU_E5_S1-18_040093.dgn
jkepich

Docusign Envelope ID: 99D11E6B-EAE6-8D75-8060-39096869B815

8/26/21

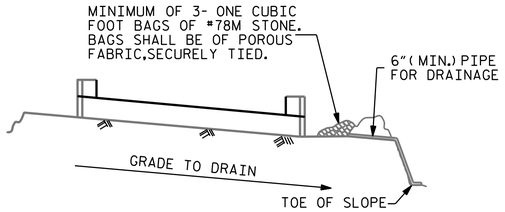

BAGGED STONE AND PIPE SHALL BE PLACED IMMEDIATELY AFTER COMPLETION OF END BENT EXCAVATION. PIPE MAY BE EITHER CONCRETE, CORRUGATED STEEL, CORRUGATED ALUMINUM ALLOY, OR CORRUGATED PLASTIC. PERFORATED PIPE WILL NOT BE ALLOWED.

BAGGED STONE SHALL REMAIN IN PLACE UNTIL THE ENGINEER DIRECTS THAT IT BE REMOVED. THE CONTRACTOR SHALL REMOVE AND DISPOSE OF SILT ACCUMULATIONS AT BAGGED STONE WHEN SO DIRECTED BY THE ENGINEER. BAGS SHALL BE REMOVED AND REPLACED WHENEVER THE ENGINEER DETERMINES THAT THEY HAVE DETERIORATED AND LOST THEIR EFFECTIVENESS.

NO SEPARATE PAYMENT WILL BE MADE FOR THIS WORK AND THE ENTIRE COST OF THIS WORK SHALL BE INCLUDED IN THE UNIT CONTRACT PRICE BID FOR THE SEVERAL PAY ITEMS.

TEMPORARY DRAINAGE AT END BENT

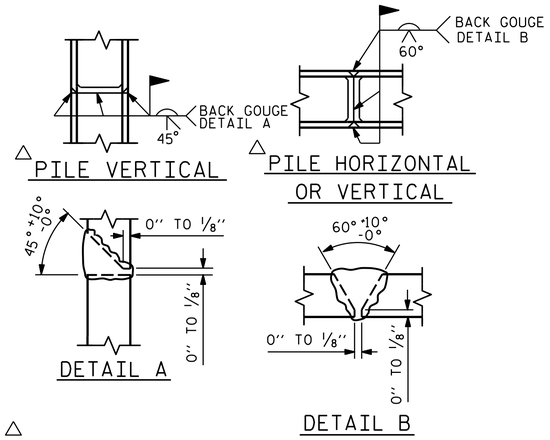

△ POSITION OF PILE DURING WELDING.

PILE SPLICE DETAILS

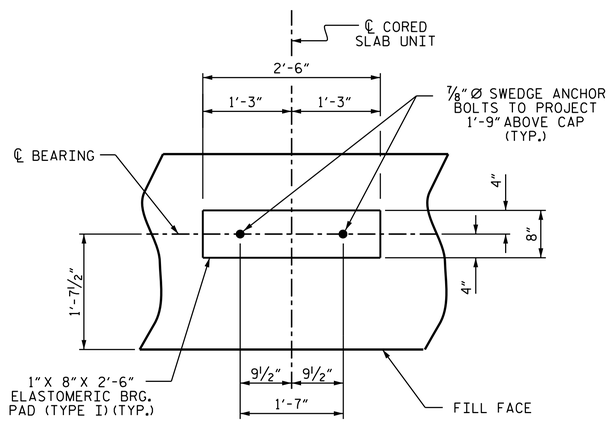

DETAIL "A"

(END BENT No.1 SHOWN, END BENT No.2 SIMILAR BY ROTATION)

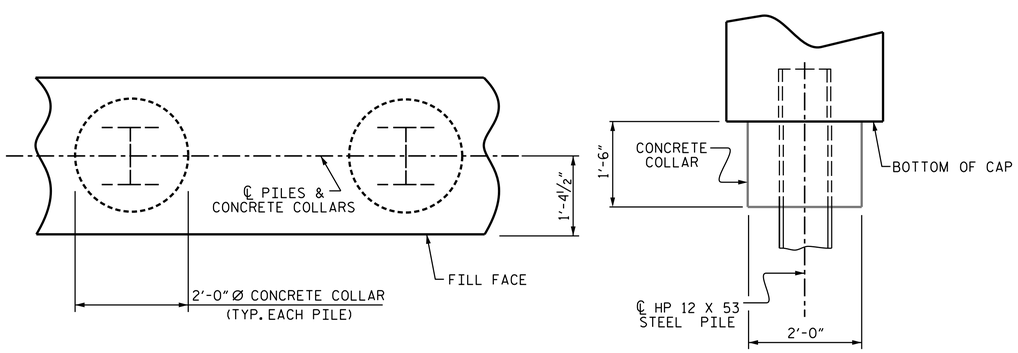

PLAN

ELEVATION

CORROSION PROTECTION FOR STEEL PILES DETAIL

(END BENT No.1 SHOWN, END BENT No.2 SIMILAR BY ROTATION)

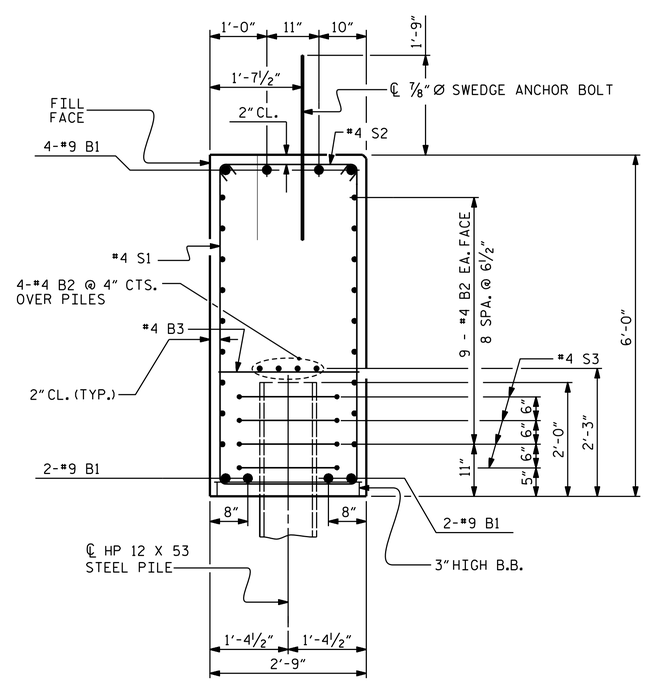

SECTION A-A

(CONCRETE COLLAR NOT SHOWN FOR CLARITY. SEE "CORROSION PROTECTION FOR STEEL PILES DETAIL.")

BAR TYPES

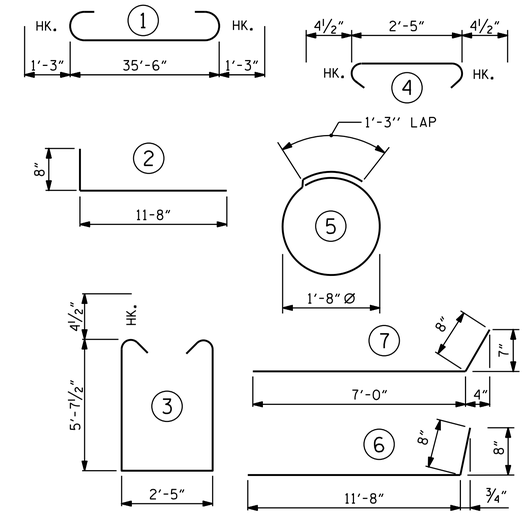

ALL BAR DIMENSIONS ARE OUT TO OUT.

END BENT No. 1	END BENT No. 2
HP 12 X 53 STEEL PILES NO: 5 LIN. FT.= 75	HP 12 X 53 STEEL PILES NO: 5 LIN. FT.= 75

BILL OF MATERIAL

FOR END BENT #1

BAR	NO.	SIZE	TYPE	LENGTH	WEIGHT
B1	8	#9	1	38'-0"	1034
B2	44	#4	STR	19'-1"	561
B3	9	#4	STR	2'-5"	15
H2	28	#4	7	7'-8"	143
H3	26	#5	6	12'-4"	334
K2	8	#4	STR	4'-7"	24
K3	8	#4	STR	3'-7"	19
S1	46	#4	3	14'-5"	443
S2	46	#4	4	3'-2"	97
S3	20	#4	5	6'-6"	87
V1	59	#4	STR	8'-2"	321

REINFORCING STEEL (FOR END BENT 1) 3078 LBS.

CLASS A CONCRETE BREAKDOWN

POUR #1 CAP, LOWER PART OF WINGS & COLLARS 26.9 C.Y.

POUR #2 UPPER PART OF WINGS 2.3 C.Y.

TOTAL CLASS A CONCRETE 29.2 C.Y.

FOR END BENT #2

BAR	NO.	SIZE	TYPE	LENGTH	WEIGHT
B1	8	#9	1	38'-0"	1034
B2	44	#4	STR	19'-1"	561
B3	9	#4	STR	2'-5"	15
H1	52	#5	2	12'-4"	669
K1	16	#4	STR	3'-5"	37
S1	46	#4	3	14'-5"	443
S2	46	#4	4	3'-2"	97
S3	20	#4	5	6'-6"	87
V1	68	#4	STR	8'-2"	371

REINFORCING STEEL (FOR END BENT 2) 3314 LBS.

CLASS A CONCRETE BREAKDOWN

POUR #1 CAP, LOWER PART OF WINGS & COLLARS 27.8 C.Y.

POUR #2 UPPER PART OF WINGS 2.6 C.Y.

TOTAL CLASS A CONCRETE 30.4 C.Y.

PROJECT NO. HB-0044

ASHE COUNTY

STATION: 13+57.00 -L-

SHEET 6 OF 6

STATE OF NORTH CAROLINA
DEPARTMENT OF TRANSPORTATION
RALEIGH

SUBSTRUCTURE

END BENT No.1 & 2 DETAILS

NORTH CAROLINA PROFESSIONAL SEAL 037903 ENGINEER JEFFREY M. KEPICH

Signed by: Jeffrey Kepich 7C5C71DBEF914E3... 6/12/2026

DOCUMENT NOT CONSIDERED FINAL UNLESS ALL SIGNATURES COMPLETED

REVISIONS								SHEET NO.
NO.	BY:	DATE:	NO.	BY:	DATE:			S1-19
1			3					TOTAL SHEETS
2			4					24

ms consultants, inc.
5444 Wade Park Blvd.
Suite 160
Raleigh, NC 27607
NC License Number : C-3239

ASSEMBLED BY:	J. KEPICH	DATE :	01/2026
CHECKED BY :	J. PAPCIAK	DATE :	01/2026
DRAWN BY : WJH 12/11	REV. 4/17 MAA/THC		
CHECKED BY : AAC 12/11			

5/15/2026
c:\workdir\ncdot-pw.bentley.com_ncdot-pw-01\jeffrey kepich\d0529501\401_037_HB-0044_SMU_E6_S1-19_040093.dgn
jkepich

(ALTERED) STD. NO. EB_30_90S4

Docusign Envelope ID: 99D11E6B-EAE6-8D75-8060-39096869B815

8/26/21

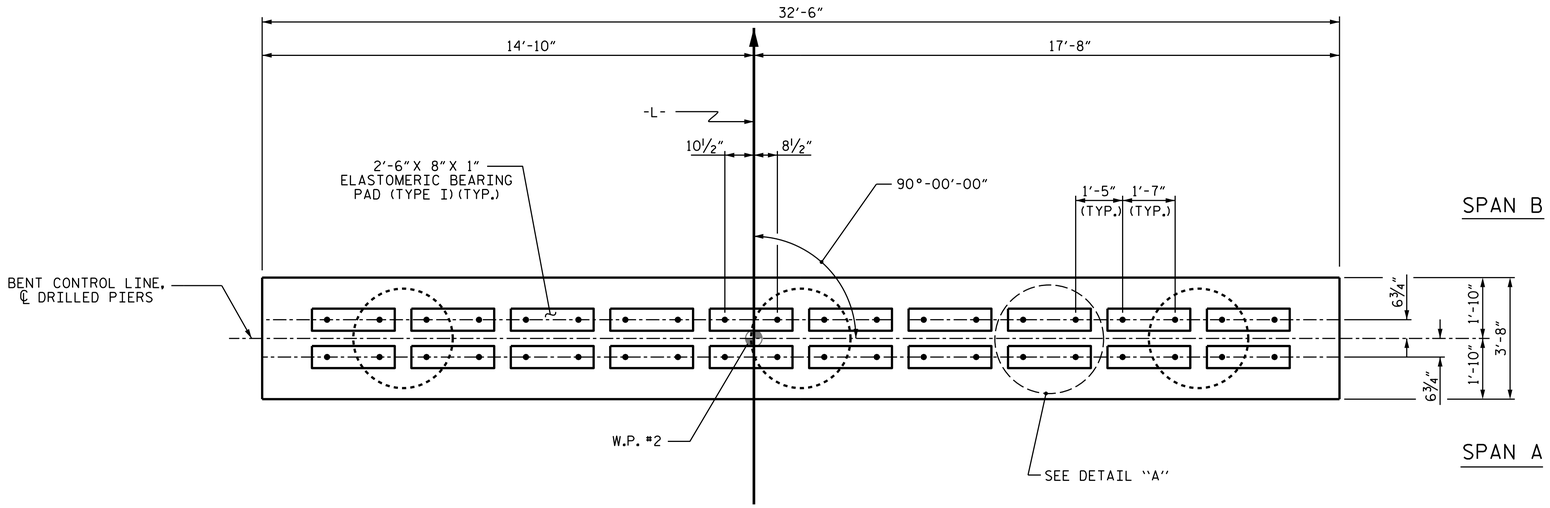

PLAN

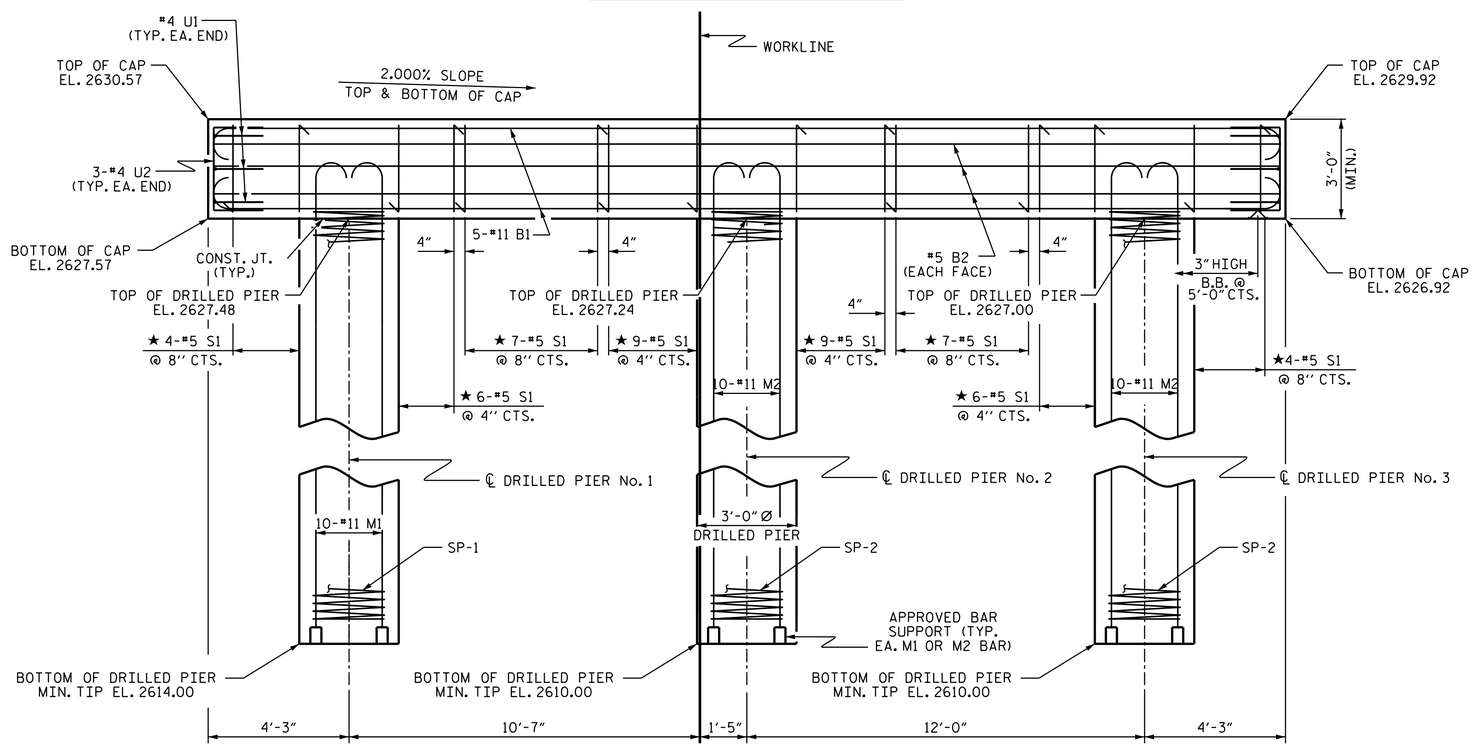

ELEVATION

DIMENSIONS & REINFORCING STEEL ARE TYPICAL FOR EACH DRILLED PIER UNLESS OTHERWISE NOTED.

NOTES

STIRRUPS IN CAP MAY BE SHIFTED AS NECESSARY TO CLEAR SWEDGE ANCHOR BOLT LOCATIONS.

HOOKS ON "V" BARS MAY BE TURNED AS NECESSARY FOR PLACING REINFORCING STEEL.

FOR DRILLED PIERS, SEE SECTION 411 OF THE STANDARD SPECIFICATIONS.

ALL STEEL IN THE DRILLED PIERS IS INCLUDED IN THE PAY ITEMS FOR "REINFORCING STEEL" AND "SPIRAL COLUMN REINFORCING STEEL."

★ INVERT ALTERNATE STIRRUPS.

THE CONTRACTOR'S ATTENTION IS CALLED TO THE FACT THAT THE LONGITUDINAL REINFORCEMENT FOR DRILLED PIERS IS DETAILED WITH 3 FEET OF EXTRA LENGTH. AS THERE IS NO SPLICE, VERIFY THE "M" BAR LENGTH INTO THE CAP PRIOR TO POURING THE DRILLED PIER CONCRETE AND CUT AS NECESSARY MAINTAINING THE NECESSARY EMBEDMENT INTO THE CAP AS PER PLANS.

SWEDGE ANCHOR BOLTS SHALL MEET THE REQUIREMENTS OF ASTM A449. ANCHOR PLATES, WASHERS, AND NUTS SHALL MEET THE REQUIREMENTS OF THE STANDARD SPECIFICATIONS. SWEDGE ANCHOR BOLTS, ANCHOR PLATES, WASHERS, AND NUTS SHALL BE GALVANIZED IN ACCORDANCE WITH THE STANDARD SPECIFICATIONS.

NO SEPARATE PAYMENT SHALL BE MADE FOR THE SWEDGE ANCHOR BOLTS, ANCHOR PLATES, WASHERS, AND NUTS. THE COST OF THE MATERIAL AND INSTALLATION SHALL BE CONSIDERED INCIDENTAL TO VARIOUS PAY ITEMS.

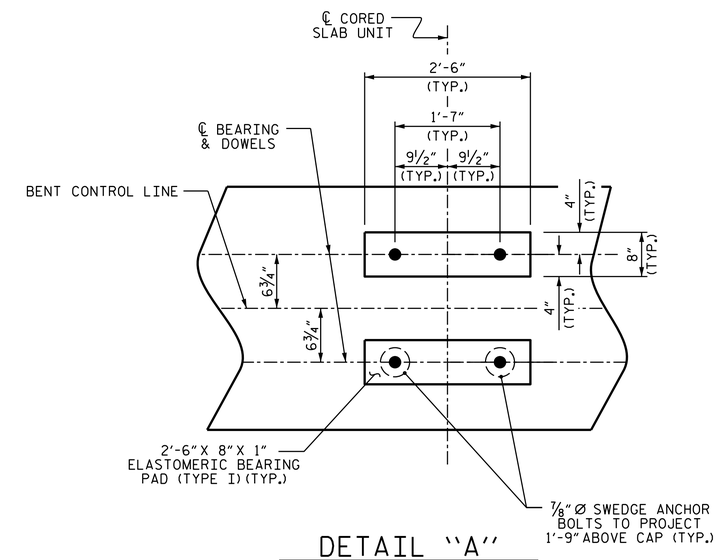

DETAIL "A"

(DIMENSIONS ARE TYPICAL EACH BEARING)

PROJECT NO. HB-0044

ASHE COUNTY

STATION: 13+57.00 -L-

SHEET 1 OF 2

STATE OF NORTH CAROLINA
DEPARTMENT OF TRANSPORTATION
RALEIGH

SUBSTRUCTURE
BENT No. 1

NORTH CAROLINA PROFESSIONAL SEAL 037903 ENGINEER JEFFREY M. KEPICH

Signed by: Jeffrey Kepich
7C5C71DBEF914E3...
6/12/2026

ms consultants, inc.
5444 Wade Park Blvd.
Suite 160
Raleigh, NC 27607
NC License Number : C-3239

DOCUMENT NOT CONSIDERED FINAL UNLESS ALL SIGNATURES COMPLETED

REVISIONS							SHEET NO.
NO.	BY:	DATE:	NO.	BY:	DATE:		S1-20
1			3				TOTAL SHEETS
2			4				24

ASSEMBLED BY:	J. KEPICH	DATE :	01/2026
CHECKED BY :	J. PAPCIAK	DATE :	01/2026
DRAWN BY : DGE 4/10	REV. 11/14		
CHECKED BY : MKT 4/10			

5/15/2026
c:\workdir\ncdot-pw.bentley.com_ncdot-pw-01\jeffrey kepich\d0529501\401_039_HB-0044_SMU_B1_S1-20_040093.dgn
jkepich

STD. NO. DP_BT_30_90S_<50'

Docusign Envelope ID: 99D11E6B-EAE6-8D75-8060-39096869B815

8/26/21

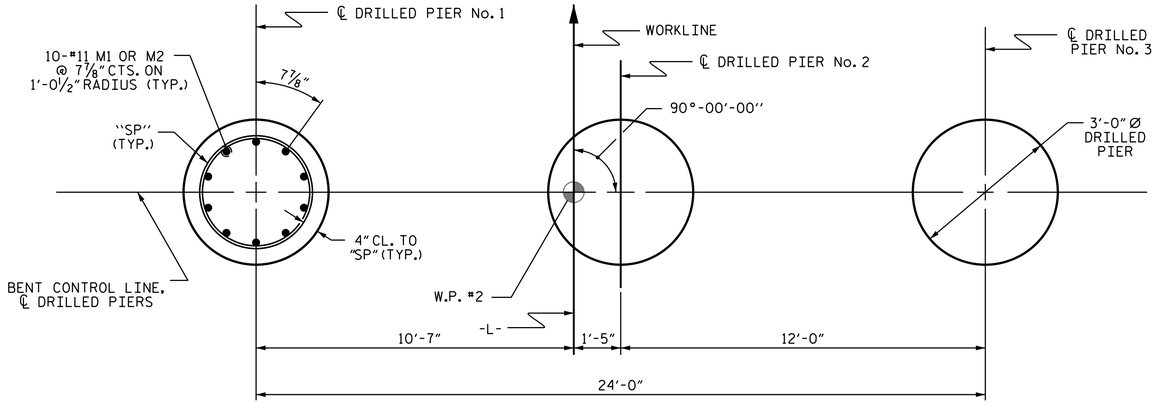

PLAN OF DRILLED PIERS

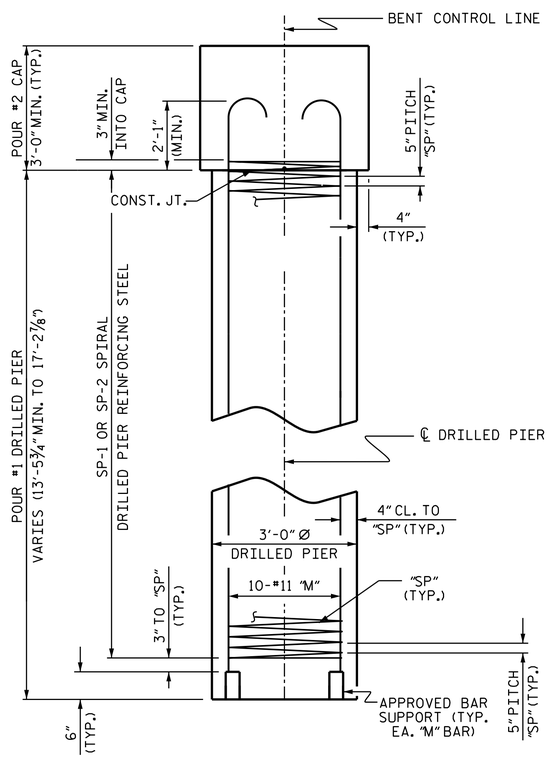

END ELEVATION

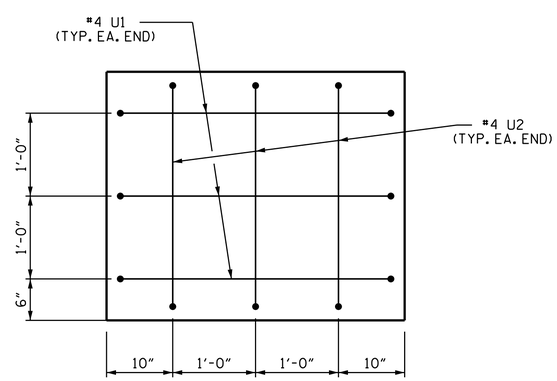

END OF CAP VIEW

(TYPICAL BOTH ENDS)

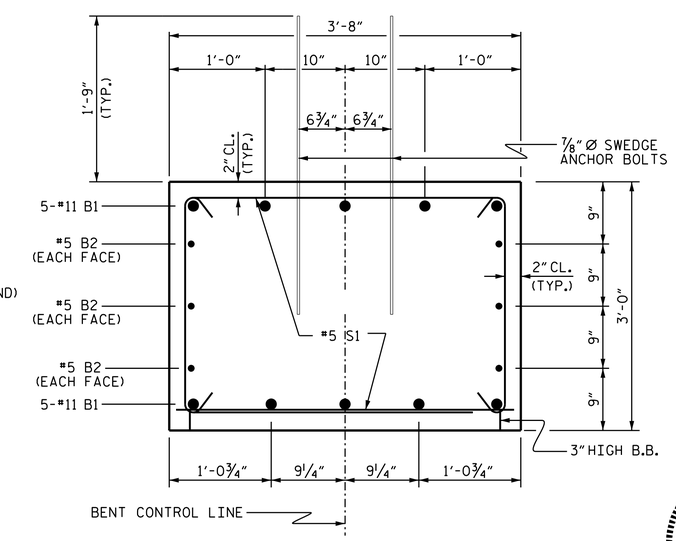

SECTION THRU CAP

BAR TYPES

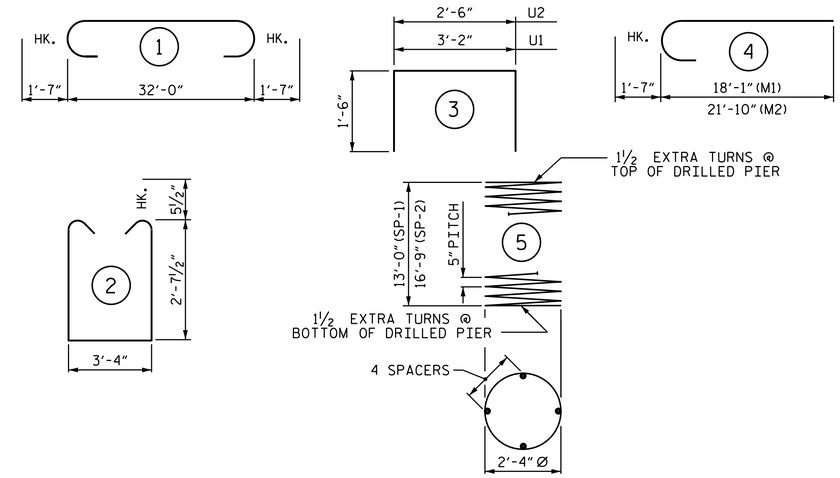

ALL BAR DIMENSIONS ARE OUT TO OUT

BILL OF MATERIAL
FOR ONE BENT

BAR	NO.	SIZE	TYPE	LENGTH	WEIGHT
B1	10	#11	1	35'-2"	1868
B2	6	#5	STR	32'-2"	201
M1	10	#11	4	19'-8"	1045
M2	20	#11	4	23'-5"	2488
S1	52	#5	2	9'-6"	515
U1	6	#4	3	6'-2"	25
U2	6	#4	3	5'-6"	22

REINFORCING STEEL (FOR ONE BENT) 6164 LBS.

SP-1	1	*	5	393'-10"	411
SP-2	2	*	5	501'-8½"	524

SPIRAL COLUMN REINFORCING STEEL (FOR ONE BENT) 1459 LBS.

* THE SP-1 SPIRAL REINFORCING STEEL SHALL BE W31 OR D-31 COLD DRAWN WIRE OR #5 PLAIN OR DEFORMED BAR

CLASS A CONCRETE BREAKDOWN (FOR ONE BENT)

POUR #2 (CAP) 13.3 C.Y.

TOTAL CLASS A CONCRETE 13.3 C.Y.

DRILLED PIERS: (FOR ONE BENT)

DRILLED PIER CONCRETE
POUR #1 (DRILLED PIERS) 12.5 C.Y.

PERMANENT STEEL CASING FOR 3'-0" Ø DRILLED PIER 21.9 LIN. FT.

CSL TUBES 1 EA.

PROJECT NO. HB-0044
ASHE COUNTY
STATION: 13+57.00 -L-

SHEET 2 OF 2

STATE OF NORTH CAROLINA
DEPARTMENT OF TRANSPORTATION
RALEIGH

SUBSTRUCTURE
BENT No. 1

NORTH CAROLINA PROFESSIONAL SEAL 037903 ENGINEER JEFFREY M. KEPICH
Signed by: Jeffrey Kepich 7C5C71DBEF914E3...
6/12/2026

ms consultants, inc.
5444 Wade Park Blvd.
Suite 160
Raleigh, NC 27607
NC License Number : C-3239

DOCUMENT NOT CONSIDERED FINAL UNLESS ALL SIGNATURES COMPLETED

REVISIONS						SHEET NO.
NO.	BY:	DATE:	NO.	BY:	DATE:	S1-21
1			3			TOTAL SHEETS
2			4			24

ASSEMBLED BY:	J. KEPICH	DATE :	01/2026
CHECKED BY :	J. PAPCIAK	DATE :	01/2026
DRAWN BY : DGE 3/10	REV. 11/14	MAA/TMG	
CHECKED BY : MKT 3/10			

5/15/2026
c:\workdir\ncdot-pw.bentley.com_ncdot-pw-01\jeffrey kepich\d0529501\401_041_HB-0044_SMU_B2_S1-21_040093.dgn
jkepich

STD. NO. DP_BT_30_90S_<50'

Docusign Envelope ID: 99D11E6B-EAE6-8D75-8060-39096869B815

8/26/21

NOTES :

BANK STABILIZATION IS A ROADWAY PAY ITEM.
SEE ROADWAY PLANS FOR QUANTITIES.

END BENT 1

END BENT 2

RIP RAP PLAN

ESTIMATED QUANTITIES		
BRIDGE @ STA. 13+57.00 -L-	RIP RAP CLASS II (3'-0" THICK)	GEOTEXTILE FOR DRAINAGE
	TONS	SQUARE YARDS
END BENT 1	18	36
END BENT 2	18	36

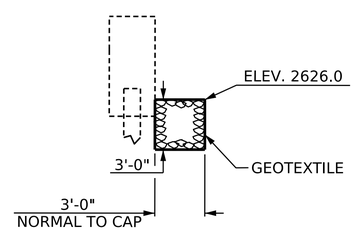

SECTION H-H

BERM RIP RAPPED

PROJECT NO. HB-0044
ASHE COUNTY
STATION: 13+57.00 -L-

STATE OF NORTH CAROLINA
DEPARTMENT OF TRANSPORTATION
RALEIGH

BANK STABILIZATION RIP RAP DETAILS

NORTH CAROLINA PROFESSIONAL SEAL 037903 ENGINEER JEFFREY M. KEPICH

Signed by: Jeffrey Kepich 7C5C71DBEF914E3... 6/12/2026

ms consultants, inc.
5444 Wade Park Blvd.
Suite 160
Raleigh, NC 27607
NC License Number : C-3239

DOCUMENT NOT CONSIDERED FINAL UNLESS ALL SIGNATURES COMPLETED

REVISIONS						SHEET NO.
NO.	BY:	DATE:	NO.	BY:	DATE:	S1-22
1			3			TOTAL SHEETS
2			4			24

DRAWN BY :	J. KEPICH	DATE :	01/26
CHECKED BY :	J. PAPCIAK	DATE :	01/26
DESIGN ENGINEER OF RECORD:	J. KEPICH	DATE :	01/26

5/15/2026
c:\workdir\ncdot-pw.bentley.com_ncdot-pw-01\jeffrey kepich\d0529501\401_043_HB-0044_SMU_RR_S1-22_040093.dgn
jkepich

Docusign Envelope ID: 99D11E6B-EAE6-8D75-8060-39096869B815

8/26/21

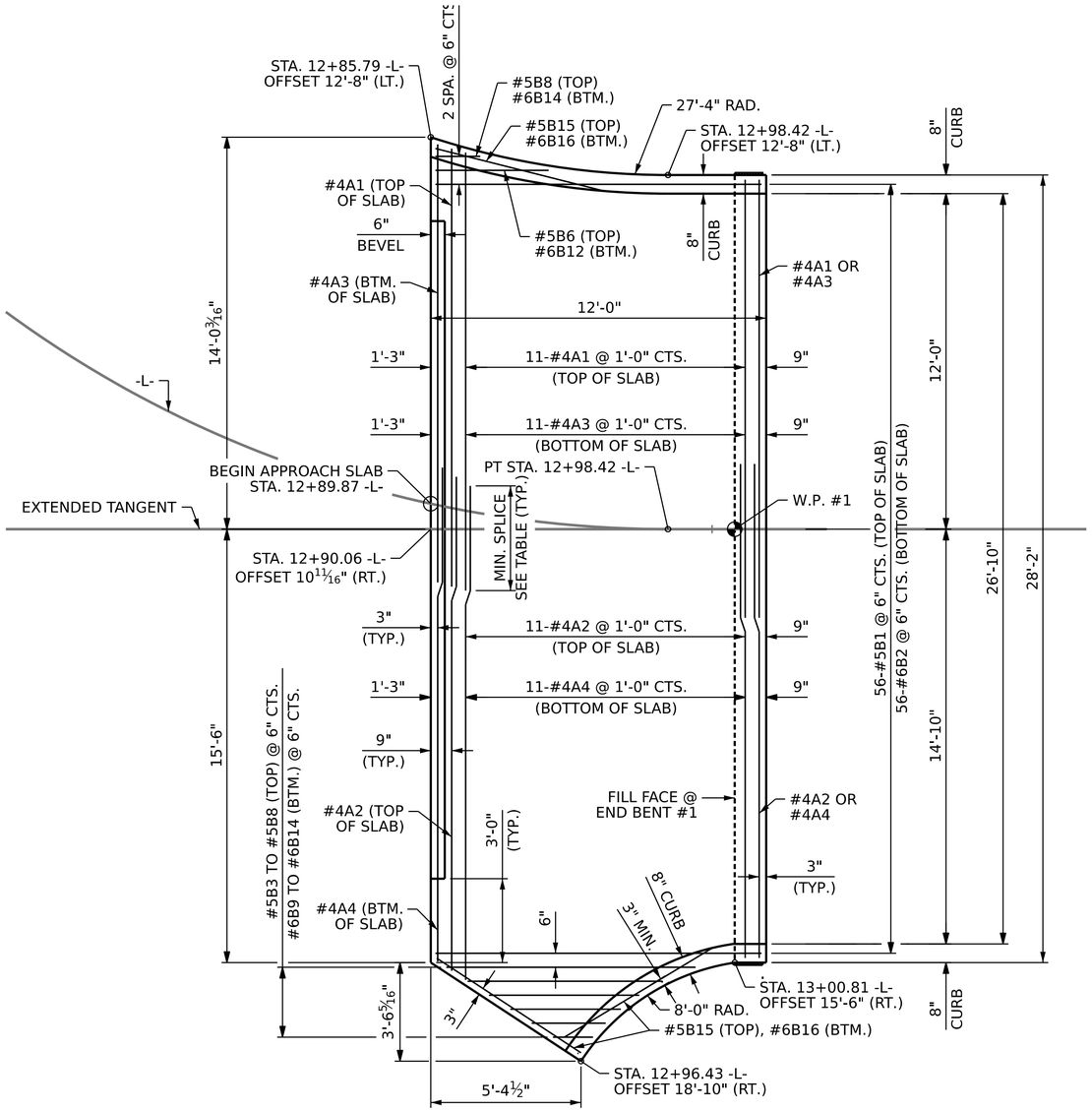

PLAN AT END BENT NO. 1

NOTES

FOR BRIDGE APPROACH FILL, SEE ROADWAY PLANS.

AREA BETWEEN THE WINGWALL AND APPROACH SLAB SHALL BE GRADED TO DRAIN THE WATER AWAY FROM THE FILL FACE OF THE BRIDGE AND SHALL BE PAVED. SEE ROADWAY PLANS.

APPROACH SLAB GROOVING IS NOT REQUIRED.

FOR END BENT NO. 2 PLAN AND ADDITIONAL DETAILS SEE SHEET 2 OF 2.

BILL OF MATERIAL

APPROACH SLAB AT EB #1

BAR	NO.	SIZE	TYPE	LENGTH	WEIGHT
✳ A1	13	#4	STR	15'-8"	136
✳ A2	13	#4	STR	17'-8"	153
A3	13	#4	STR	15'-4"	133
A4	13	#4	STR	17'-8"	153
✳ B1	56	#5	STR	11'-2"	652
B2	56	#6	STR	11'-8"	981
✳ B3	1	#5	STR	8'-11"	9
✳ B4	1	#5	STR	7'-0"	7
✳ B5	1	#5	STR	5'-5"	6
✳ B6	2	#5	STR	4'-0"	8
✳ B7	1	#5	STR	2'-8"	3
✳ B8	2	#5	STR	1'-5"	3
B9	1	#6	STR	8'-11"	13
B10	1	#6	STR	7'-0"	11
B11	1	#6	STR	5'-5"	8
B12	2	#6	STR	4'-0"	12
B13	1	#6	STR	2'-8"	4
B14	2	#6	STR	1'-5"	4
✳ B15	3	#5	STR	6'-2"	19
B16	3	#6	STR	6'-2"	28

REINFORCING STEEL	LBS.	1347
✳ EPOXY COATED REINFORCING STEEL	LBS.	996
CLASS AA CONCRETE	C. Y.	18.5

SPLICE LENGTHS

BAR SIZE	EPOXY COATED	UNCOATED
#4	1'-11"	1'-7"
#5	2'-5"	2'-0"
#6	3'-7"	2'-5"

PROJECT NO. HB-0044

ASHE COUNTY

STATION: 13+57.00 -L-

SHEET 1 OF 2

STATE OF NORTH CAROLINA
DEPARTMENT OF TRANSPORTATION
RALEIGH

BRIDGE APPROACH SLAB PRESTRESSED CONCRETE CORED SLAB UNIT (SUB-REGIONAL TIER) 90° SKEW

NORTH CAROLINA PROFESSIONAL SEAL 037903 ENGINEER JEFFREY M KEPICH

Signed by: Jeffrey Kepich 7C5C71DBEF914E3... 6/12/2026

ms consultants, inc.
5444 Wade Park Blvd.
Suite 160
Raleigh, NC 27607
NC License Number : C-3239

DOCUMENT NOT CONSIDERED FINAL UNLESS ALL SIGNATURES COMPLETED

REVISIONS						SHEET NO.
NO.	BY:	DATE:	NO.	BY:	DATE:	S1-23
1			3			TOTAL SHEETS
2			4			24

DRAWN BY :	J. KEPICH	DATE :	01/26
CHECKED BY :	J. PAPCIAK	DATE :	01/26
DESIGN ENGINEER OF RECORD:	J. KEPICH	DATE :	01/26

5/15/2026
c:\workdir\ncdot-pw.bentley.com_ncdot-pw-01\jeffrey kepich\d0529501\401_045_HB-0044_SMU_AS1_S1-23_040093.dgn
jkepich

Docusign Envelope ID: 99D11E6B-EAE6-8D75-8060-39096869B815

8/26/21

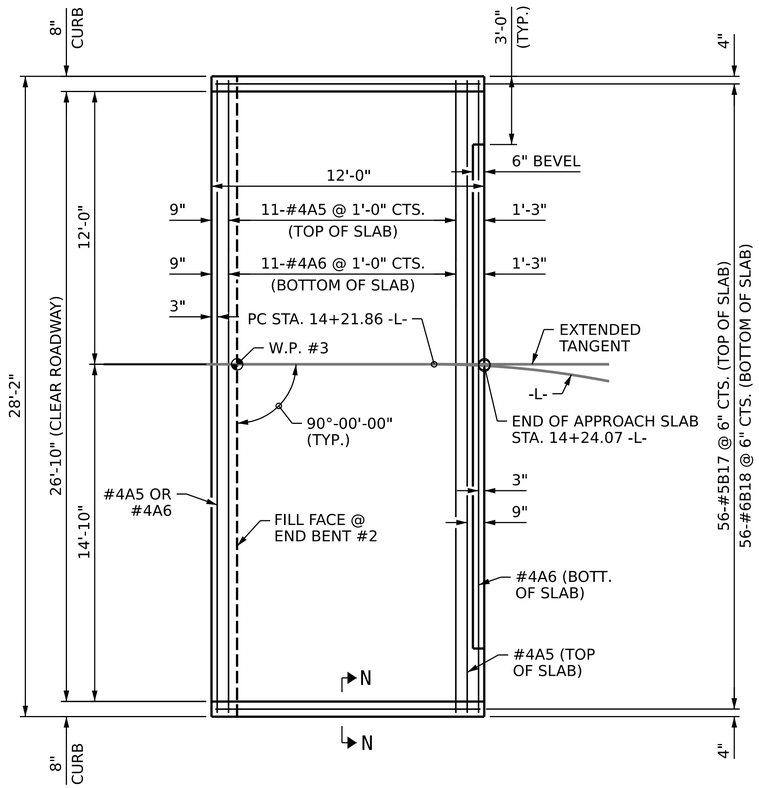

PLAN @ END BENT 2

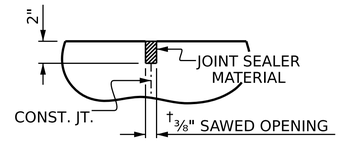

DETAIL "A"

NOTES

FOR BRIDGE APPROACH FILL, SEE ROADWAY PLANS.

AREA BETWEEN THE WINGWALL AND APPROACH SLAB SHALL BE GRADED TO DRAIN THE WATER AWAY FROM THE FILL FACE OF THE BRIDGE AND SHALL BE PAVED. SEE ROADWAY PLANS.

APPROACH SLABS SHALL BE POURED AFTER CONCRETE WEARING SURFACE IS POURED.

THE JOINT OPENING AT THE APPROACH SLAB/DECK INTERFACE SHALL BE SAWED NO MORE THAN 12 HOURS AFTER THE APPROACH SLAB IS CAST. THE JOINT SHALL BE CLEANED OF ALL DEBRIS BEFORE THE SEALANT IS APPLIED. THE JOINT SEALER MATERIAL SHALL CONFORM TO THE REQUIREMENTS OF SECTION 1028-3 OF THE STANDARD SPECIFICATIONS.

BILL OF MATERIAL

APPROACH SLAB AT EB 2

BAR	NO.	SIZE	TYPE	LENGTH	WEIGHT
*A5	13	#4	STR	27'-10"	242
A6	13	#4	STR	27'-10"	242
*B17	56	#5	STR	11'-2"	652
B18	56	#6	STR	11'-8"	981
REINFORCING STEEL				LBS.	1223
* EPOXY COATED REINFORCING STEEL				LBS.	894
CLASS AA CONCRETE				C. Y.	21.12

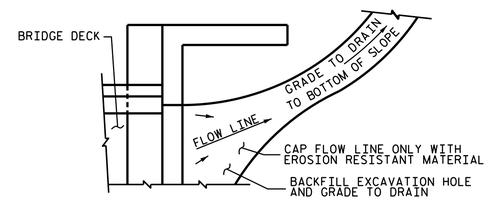

NOTE: IF THE APPROACH SLAB IS NOT CONSTRUCTED IMMEDIATELY AFTER THE BACKFILLING OF THE END BENT EXCAVATION, GRADE TO DRAIN TO THE BOTTOM OF THE SLOPE AND PROVIDE EROSION RESISTANT MATERIAL, SUCH AS FIBERGLASS ROVING OR AS DIRECTED BY THE ENGINEER TO PREVENT SOIL EROSION AND TO PROTECT THE AREA ADJACENT TO THE STRUCTURE. THE CONTRACTOR WILL BE REQUIRED TO REMOVE THESE MATERIALS PRIOR TO CONSTRUCTION OF THE APPROACH SLAB.

TEMPORARY DRAINAGE DETAIL

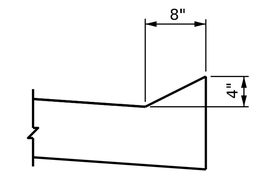

SECTION N-N

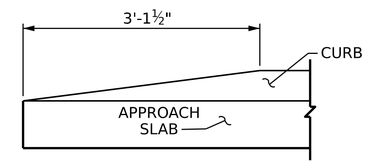

END OF CURB WITHOUT SHOULDER BERM GUTTER

CURB DETAILS

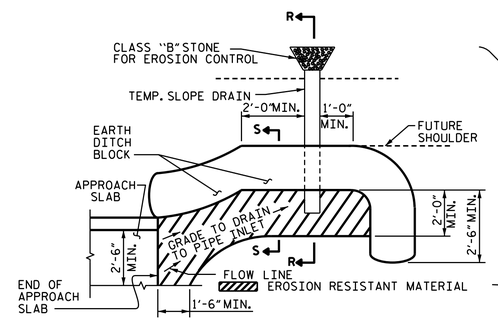

NOTE: IMMEDIATELY AFTER THE CONSTRUCTION OF THE APPROACH SLAB, THE CONTRACTOR SHALL PROVIDE TEMPORARY BERM AND SLOPE DRAIN. CONTRACTOR SHALL GRADE TO PIPE INLET AND PROVIDE EROSION RESISTANT MATERIAL AS SHOWN. THE EROSION RESISTANT MATERIAL SHALL BE EITHER 1) ASPHALT PLANT MIX, TYPE 1 OR TYPE 2, MIN. 2" DEPTH, 2) EROSION CONTROL MAT, OR 3) CONCRETE, AS DIRECTED BY THE ENGINEER. THE SLOPE DRAIN SHALL CONSIST OF A NON-PERFORATED TEMPORARY DRAINAGE PIPE, 12 INCHES IN DIAMETER.

PLAN VIEW

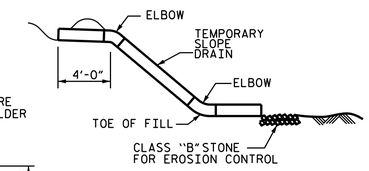

SECTION R-R

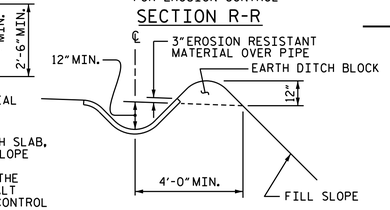

SECTION S-S

TEMPORARY BERM AND SLOPE DRAIN DETAILS

(TO BE USED WHEN SHOULDER BERM GUTTER IS REQUIRED)

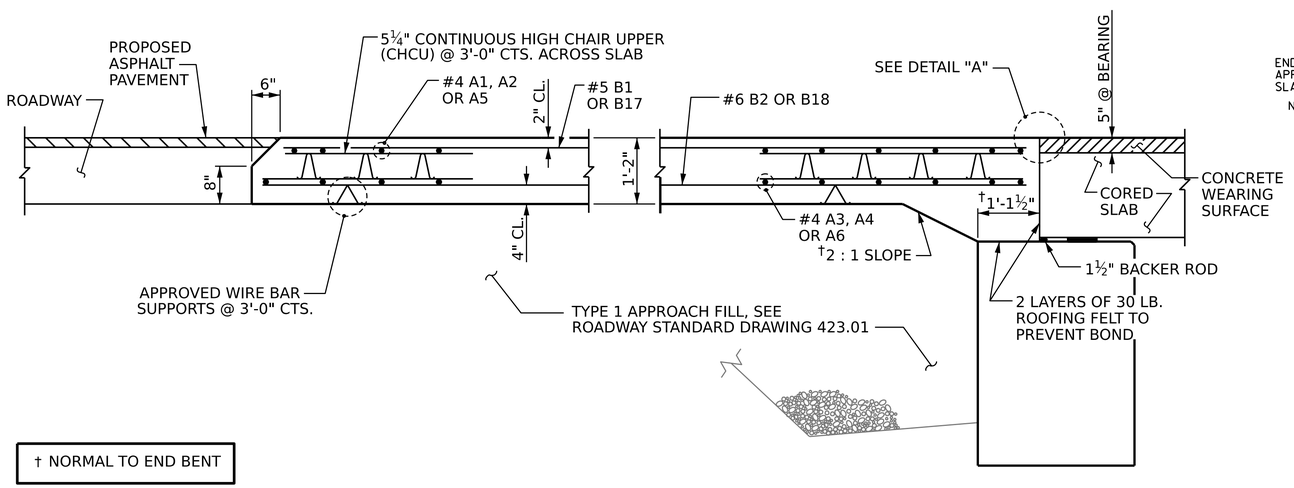

† NORMAL TO END BENT

SECTION THRU SLAB

(FOR PLACEMENT OF BARS NOT SHOWN SEE PLAN AT END BENT NO. 1 ON SHEET 1 OF 2)

PROJECT NO. HB-0044

ASHE COUNTY

STATION: 13+57.00 -L-

SHEET 2 OF 2

STATE OF NORTH CAROLINA
DEPARTMENT OF TRANSPORTATION
RALEIGH

STANDARD

BRIDGE APPROACH SLAB FOR PRESTRESSED CONCRETE CORED SLAB

ASSEMBLED BY:	J. KEPICH	DATE :	01/2026
CHECKED BY :	J. PAPCIAK	DATE :	01/2026
DRAWN BY : FCJ 6/87	REV. 6/13	MAA/GM	
CHECKED BY : EGA 6/87	REV. 12/17	MAA/THC	
	REV. 07/23	BNB/SNM	

5/15/2026
c:\workdir\ncdot-pw.bentley.com_ncdot-pw-01\jeffrey kepich\d0529501\401_047_HB-0044_SMU_AS_S1-24_040093.dgn
jkepich

ms consultants, inc.
5444 Wade Park Blvd.
Suite 160
Raleigh, NC 27607
NC License Number : C-3239

NORTH CAROLINA PROFESSIONAL SEAL 037903 ENGINEER JEFFREY M. KEPICH

Signed by: Jeffrey Kepich 7C5C71DBEF914E3...
6/12/2026

DOCUMENT NOT CONSIDERED FINAL UNLESS ALL SIGNATURES COMPLETED

REVISIONS								SHEET NO.
NO.	BY:	DATE:	NO.	BY:	DATE:			S1-24
1			3					TOTAL SHEETS
2			4					24

STD. NO. BAS3 Sheet 02

STANDARD NOTES

DESIGN DATA:

SPECIFICATIONS	AASHTO (CURRENT)
LIVE LOAD	SEE PLANS
IMPACT ALLOWANCE	SEE AASHTO
STRESS IN EXTREME FIBER OF STRUCTURAL STEEL - AASHTO M270 GRADE 36	20,000 LBS. PER SQ. IN.
- AASHTO M270 GRADE 50W	27,000 LBS. PER SQ. IN.
- AASHTO M270 GRADE 50	27,000 LBS. PER SQ. IN.
REINFORCING STEEL IN TENSION - GRADE 60	24,000 LBS. PER SQ. IN.
CONCRETE IN COMPRESSION	1,200 LBS. PER SQ. IN.
CONCRETE IN SHEAR	SEE AASHTO
STRUCTURAL TIMBER - TREATED OR UNTREATED EXTREME FIBER STRESS	1,800 LBS. PER SQ. IN.
COMPRESSION PERPENDICULAR TO GRAIN OF TIMBER	375 LBS. PER SQ. IN.
EQUIVALENT FLUID PRESSURE OF EARTH	30 LBS. PER CU. FT. (MINIMUM)

MATERIAL AND WORKMANSHIP:

EXCEPT AS MAY OTHERWISE BE SPECIFIED ON PLANS OR IN THE SPECIAL PROVISIONS, ALL MATERIAL AND WORKMANSHIP SHALL BE IN ACCORDANCE WITH THE 2024 "STANDARD SPECIFICATIONS FOR ROADS AND STRUCTURES" OF THE N. C. DEPARTMENT OF TRANSPORTATION.

STEEL SHEET PILING FOR PERMANENT OR TEMPORARY APPLICATIONS SHALL BE HOT ROLLED.

CONCRETE:

UNLESS OTHERWISE REQUIRED ON PLANS, CLASS A CONCRETE SHALL BE USED FOR ALL PORTIONS OF ALL STRUCTURES WITH THE EXCEPTION THAT: CLASS AA CONCRETE SHALL BE USED IN BRIDGE SUPERSTRUCTURES, ABUTMENT BACKWALLS, AND APPROACH SLABS; AND CLASS B CONCRETE SHALL BE USED FOR SLOPE PROTECTION AND RIP RAP.

CONCRETE CHAMFERS:

UNLESS OTHERWISE NOTED ON THE PLANS, ALL EXPOSED CORNERS ON STRUCTURES SHALL BE CHAMFERED ¾" WITH THE FOLLOWING EXCEPTIONS: TOP CORNERS OF CURBS MAY BE ROUNDED TO 1½" RADIUS WHICH IS BUILT INTO CURB FORMS; CORNERS OF TRANSVERSE FLOOR EXPANSION JOINTS SHALL BE ROUNDED WITH A ¼" FINISHING TOOL UNLESS OTHERWISE REQUIRED ON PLANS; AND CORNERS OF EXPANSION JOINTS IN THE ROADWAY FACES AND TOPS OF CURBS AND SIDEWALKS SHALL BE ROUNDED TO A ¼" RADIUS WITH A FINISHING STONE OR TOOL UNLESS OTHERWISE REQUIRED ON PLANS.

DOWELS:

DOWELS WHEN INDICATED ON PLANS AS FOR CULVERT EXTENSIONS, SHALL BE EMBEDDED AT LEAST 12" INTO THE OLD CONCRETE AND GROUTED INTO PLACE WITH 1:2 CEMENT MORTAR.

ALLOWANCE FOR DEAD LOAD DEFLECTION, SETTLEMENT, ETC. IN CASTING SUPERSTRUCTURES:

BRIDGES SHALL BE BUILT ON THE GRADE OR VERTICAL CURVE SHOWN ON PLANS. SLABS, CURBS AND PARAPETS SHALL CONFORM TO THE GRADE OR CURVE.

ALL DIMENSIONS WHICH ARE GIVEN IN SECTION AND ARE AFFECTED BY DEAD LOAD DEFLECTIONS ARE DIMENSIONS AT CENTER LINE OF BEARING UNLESS OTHERWISE NOTED ON PLANS. IN SETTING FORMS FOR STEEL BEAM BRIDGES AND PRESTRESSED CONCRETE GIRDER BRIDGES, ADJUSTMENTS SHALL BE MADE DUE TO THE DEAD LOAD DEFLECTIONS FOR THE ELEVATIONS SHOWN. WHERE BLOCKS ARE SHOWN OVER BEAMS FOR BUILDING UP TO THE SLAB, THE VERTICAL DIMENSIONS OF THE BLOCKS SHALL BE ADJUSTED BETWEEN BEARINGS TO COMPENSATE FOR DEAD LOAD DEFLECTIONS, VERTICAL CURVE ORDINATE, AND ACTUAL BEAM CAMBER. WHERE BOTTOM OF SLAB IS IN LINE WITH BOTTOM OF TOP FLANGES, DEPTH OF SLAB BETWEEN BEARINGS SHALL BE ADJUSTED TO COMPENSATE FOR DEAD LOAD DEFLECTION, VERTICAL CURVE ORDINATE, AND ACTUAL BEAM CAMBER.

IN SETTING FALSEWORK AND FORMS FOR REINFORCED CONCRETE SPANS, AN ALLOWANCE SHALL BE MADE FOR DEAD LOAD DEFLECTIONS, SETTLEMENT OF FALSEWORK, AND PERMANENT CAMBER WHICH SHALL BE PROVIDED FOR IN ADDITION TO THE ELEVATIONS SHOWN. AFTER REMOVAL OF THE FALSEWORK, THE FINISHED STRUCTURES SHALL CONFORM TO THE PROFILE AND ELEVATIONS SHOWN ON THE PLANS AND CONSTRUCTION ELEVATIONS FURNISHED BY THE ENGINEER.

DETAILED DRAWINGS FOR FALSEWORK OR FORMS FOR BRIDGE SUPERSTRUCTURE AND ANY STRUCTURE OR PARTS OF A STRUCTURE AS NOTED ON THE PLANS SHALL BE SUBMITTED TO THE ENGINEER FOR APPROVAL BEFORE CONSTRUCTION OF THE FALSEWORK OR FORMS IS STARTED.

REINFORCING STEEL:

ALL REINFORCING STEEL SHALL BE DEFORMED. DIMENSIONS RELATIVE TO PLACEMENT OF REINFORCING ARE TO CENTERS OF BARS UNLESS OTHERWISE INDICATED IN THE PLANS. DIMENSIONS ON BAR DETAILS ARE TO CENTERS OF BARS OR ARE OUT TO OUT AS INDICATED ON PLANS.

WIRE BAR SUPPORTS SHALL BE PROVIDED FOR REINFORCING STEEL WHERE INDICATED ON THE PLANS. WHEN BAR SUPPORT PIECES ARE PLACED IN CONTINUOUS LINES, THEY SHALL BE SO PLACED THAT THE ENDS OF THE SUPPORTING WIRES SHALL BE LAPPED TO LOCK LEGS ON ADJOINING PIECES.

STRUCTURAL STEEL:

AT THE CONTRACTOR'S OPTION, HE MAY SUBSTITUTE ⅞" ∅ SHEAR STUDS FOR THE ¾" ∅ STUDS SPECIFIED ON THE PLANS. THIS SUBSTITUTION SHALL BE MADE AT THE RATE OF 3 - ⅞" ∅ STUDS FOR 4 - ¾" ∅ STUDS, AND STUD SPACING CHANGES SHALL BE MADE AS NECESSARY TO PROVIDE THE SAME EQUIVALENT NUMBER OF ⅞" ∅ STUDS ALONG THE BEAM AS SHOWN FOR ¾" ∅ STUDS BASED ON THE RATIO OF 3 - ⅞"∅ STUDS FOR 4 - ¾" ∅ STUDS. STUDS OF THE LENGTH SPECIFIED ON THE PLANS MUST BE PROVIDED. THE MAXIMUM SPACING SHALL BE 2'-0".

EXCEPT AT THE INTERIOR SUPPORTS OF CONTINUOUS BEAMS WHERE THE COVER PLATE IS IN CONTACT WITH BEARING PLATE, THE CONTRACTOR MAY, AT HIS OPTION, SUBSTITUTE FOR THE COVER PLATES DESIGNATED ON THE PLANS COVER PLATES OF THE EQUIVALENT AREA PROVIDED THESE PLATES ARE AT LEAST 5/16" IN THICKNESS AND DO NOT EXCEED A WIDTH EQUAL TO THE FLANGE WIDTH LESS 2" OR A THICKNESS EQUAL TO 2 TIMES THE FLANGE THICKNESS. THE SIZE OF FILLET WELDS SHALL CONFORM TO THE REQUIREMENTS OF THE CURRENT ANSI/AASHTO/AWS "BRIDGE WELDING CODE". ELECTROSLAG WELDING WILL NOT BE PERMITTED.

WITH THE SOLE EXCEPTION OF EDGES AT SURFACES WHICH BEAR ON OTHER SURFACES, ALL SHARP EDGES AND ENDS OF SHAPES AND PLATES SHALL BE SLIGHTLY ROUNDED BY SUITABLE MEANS TO A RADIUS OF APPROXIMATELY 1/16" OR EQUIVALENT FLAT SURFACE AT A SUITABLE ANGLE PRIOR TO PAINTING, GALVANIZING, OR METALLIZING.

HANDRAILS AND POSTS:

METAL STANDARDS AND FACES OF THE CONCRETE END POSTS FOR THE METAL RAIL SHALL BE SET NORMAL TO THE GRADE OF THE CURB, UNLESS OTHERWISE SHOWN ON PLANS. THE METAL RAIL AND TOPS OF CONCRETE POSTS USED WITH THE ALUMINUM RAIL SHALL BE BUILT PARALLEL TO THE GRADE OF THE CURB.

METAL HANDRAILS SHALL BE IN ACCORDANCE WITH THE PLANS. RAILS SHALL BE AS MANUFACTURED FOR BRIDGE RAILING. CASTINGS SHALL BE OF A UNIFORM APPEARANCE. FINS AND OTHER DEFORMATIONS RESULTING FROM CASTING OR OTHERWISE SHALL BE REMOVED IN A MANNER SO THAT A UNIFORM COLORING OF THE COMPLETED CASTING SHALL BE OBTAINED. CASTINGS WITH DISCOLORATIONS OR OF NON-UNIFORM COLORING WILL NOT BE ACCEPTED. CERTIFIED MILL REPORTS ARE REQUIRED FOR METAL RAILS AND POSTS.

SPECIAL NOTES:

GENERALLY, IN CASE OF DISCREPANCY, THIS STANDARD SHEET OF NOTES SHALL GOVERN OVER THE SPECIFICATIONS, BUT THE REMAINDER OF THE PLANS SHALL GOVERN OVER NOTES HEREON, AND SPECIAL PROVISIONS SHALL GOVERN OVER ALL. SEE SPECIFICATIONS ARTICLE 105-4.

J. PAPCIAK 02/26

Docusign Envelope ID: 3F55B26C-7C78-8EA2-8391-D49442830 6FB

01/16/24

TIP PROJECT: HB-0050

CONTRACT: DK00482

See Sheet 1A For Index of Sheets
See Sheet 1B For Conventional Symbols

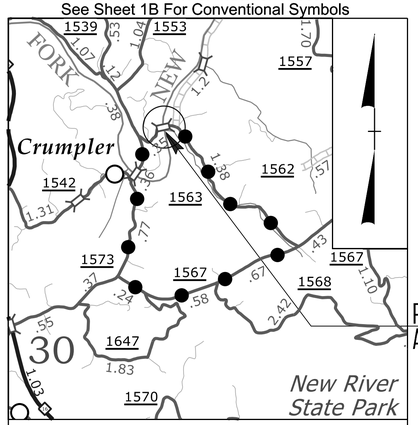

VICINITY MAP (NTS)
OFFSITE DETOUR ROUTE

STATE OF NORTH CAROLINA
DIVISION OF HIGHWAYS

ASHE COUNTY

LOCATION: *REPLACE BRIDGE NO. 040463 ON SR 1563 (CLIFTON ROAD) OVER NORTH FORK NEW RIVER*

TYPE OF WORK: *GRADING, PAVING, STRUCTURE AND DRAINAGE*

STATE	STATE PROJECT REFERENCE NO.	SHEET NO.	TOTAL SHEETS
N.C.	HB-0050	1	

STATE PROJ. NO.	F. A. PROJ. NO.	DESCRIPTION
50720.1.1	FBRG111	P.E.
50720.2.1	FBRG111	R/W
50720.2.2	FBRG111	UTILITIES
50720.3.1	FBRG111	CONSTRUCTION

FINAL PLANS

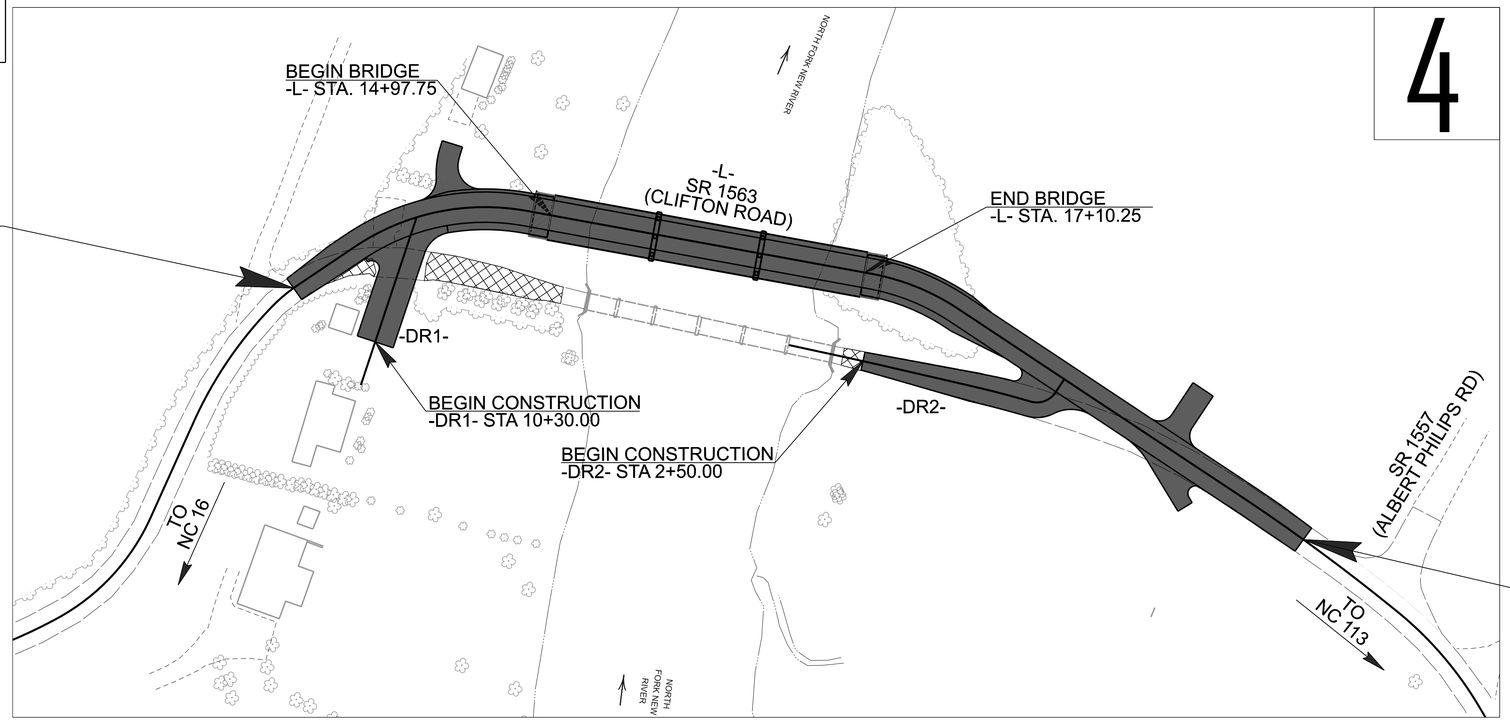

**DESIGN EXCEPTION FOR DESIGN SPEED, 15 MPH
THIS PROJECT IS NOT WITHIN ANY MUNICIPAL BOUNDARIES.

DOCUMENT NOT CONSIDERED FINAL UNLESS ALL SIGNATURES COMPLETED

GRAPHIC SCALES

50 25 0 50 100
PLANS

50 25 0 50 100
PROFILE (HORIZONTAL)

10 5 0 10 20
PROFILE (VERTICAL)

DESIGN DATA

ADT 2026 = 133
ADT 2046 = 196

D = 50%
T = 8.0% (TTST = 6.0%
AND DUALS = 2.0%)
V = 60 MPH**
FUNC CLASS =
RURAL LOCAL
SUBREGIONAL TIER

PROJECT LENGTH

LENGTH ROADWAY PROJECT HB-0050= 0.099 MILES

LENGTH STRUCTURE PROJECT HB-0050 = 0.040 MILES

TOTAL LENGTH PROJECT HB-0050 = 0.139 MILES

PREPARED BY:

ms consultants, inc.
5444 Wade Park Blvd.
Suite 160
Raleigh, NC 27607
NC License Number : C-3239

2024 STANDARD SPECIFICATIONS

RIGHT OF WAY DATE:
8/15/2025

LETTING DATE:
9/17/2026

PREPARED FOR:

DIVISION OF HIGHWAYS
DIVISION 11
801 Statesville Rd.,
North Wilkesboro NC, 28659

RAMIE SHAW, PE
NCDOT CONTACT

DAVID JANOSKO, PE
PROJECT ENGINEER

SKYLAR STULTZ, EIT
PROJECT DESIGN ENGINEER

HYDRAULICS ENGINEER

MI ENGINEERING
1011 SCHAUB DRIVE, SUITE 100
RALEIGH, NC 27606
(919) 851-6606
FIRM PE NUMBER : P-0671

DocuSigned by:
Herb Turner 7/28/2026 P.E.
SIGNATURE:

NORTH CAROLINA PROFESSIONAL SEAL 021162 ENGINEER W. HERBERT TURNER, JR.

PROJECT ENGINEER

DocuSigned by:
David Janosko 7/28/2026 P.E.
SIGNATURE:

NORTH CAROLINA PROFESSIONAL SEAL 043023 ENGINEER DAVID V. JANOSKO

STATE OF NORTH CAROLINA DEPARTMENT OF TRANSPORTATION

MSCONSULTANTS/jmerryman - 7/28/2026

Docusign Envelope ID: 7B61FCA7-D73E-86EC-8181-E3221CC8A018

5/26/20

INDEX OF SHEETS

SHEET NUMBER	SHEET
1	TITLE SHEET
1A	INDEX OF SHEETS, GENERAL NOTES, AND STANDARD DRAWINGS
1B	CONVENTIONAL SYMBOLS
2A-1	PAVEMENT SCHEDULE AND TYPICAL SECTIONS
2B-1	GEOMETRY AND RIGHT-OF-WAY DETAIL
2C-1	DETAIL IN LIEU OF STANDARD 300.01 METHOD OF PIPE INSTALLATION (SHEET 1 OF 2)
2C-2	DETAIL IN LIEU OF STANDARD 300.01 METHOD OF PIPE INSTALLATION (SHEET 2 OF 2)
2C-3	DETAIL IN LIEU OF STANDARD 862.01 GUARDRAIL PLACEMENT (SHEET 4 OF 15)
2C-4	DETAIL IN LIEU OF STANDARD 862.01 GUARDRAIL PLACEMENT (SHEET 6 OF 15)
2C-5	DETAIL IN LIEU OF STANDARD 862.01 GUARDRAIL PLACEMENT (SHEET 11 OF 15)
2C-6	DETAIL IN LIEU OF STANDARD 862.02 GUARDRAIL INSTALLATION (SHEET 5 OF 9)
3B-1	ROADWAY SUMMARY
3D-1	DRAINAGE SUMMARY
4	PLAN SHEET
5	PROFILE SHEET
RW01 THRU RW04	RIGHT-OF-WAY PLANS
EC-1 THRU EC-5	EROSION CONTROL PLANS
TMP-1 THRU TMP-3	TRANSPORTATION MANAGEMENT PLANS
PMP-1 THRU PMP-2	PAVEMENT MARKING PLANS
X-1	CROSS-SECTION INDEX
X-1A	CROSS-SECTION SUMMARY SHEET
X-2 THRU X-15	CROSS-SECTIONS
S-1 THRU S-x	STRUCTURE PLANS

GENERAL NOTES:

2024 SPECIFICATIONS
EFFECTIVE: 01-16-2024
REVISED:

GRADING AND SURFACING OR RESURFACING AND WIDENING:

THE GRADE LINES SHOWN DENOTE THE FINISHED ELEVATION OF THE PROPOSED SURFACING AT GRADE POINTS SHOWN ON THE TYPICAL SECTIONS. WHERE NO GRADE LINES ARE SHOWN, THE PROFILES SHOWN DENOTE THE TOP ELEVATION OF THE EXISTING PAVEMENT ALONG THE CENTER LINE OF SURVEY ON WHICH THE PROPOSED RESURFACING WILL BE PLACED. GRADE LINES MAY BE ADJUSTED BY THE ENGINEER IN ORDER TO SECURE A PROPER TIE-IN.

CLEARING:

CLEARING ON THIS PROJECT SHALL BE PERFORMED TO THE LIMITS ESTABLISHED BY METHOD III.

SUPERELEVATION:
ALL CURVES ON THIS PROJECT SHALL BE SUPERELEVATED IN ACCORDANCE WITH **STD. NO. 225.04** USING THE RATE OF SUPERELEVATION AND RUNOFF SHOWN ON THE PLANS. SUPERELEVATION IS TO BE REVOLVED ABOUT THE GRADE POINTS SHOWN ON THE TYPICAL SECTIONS.

SHOULDER CONSTRUCTION:
ASPHALT, EARTH, AND CONCRETE SHOULDER CONSTRUCTION ON THE HIGH SIDE OF SUPERELEVATED CURVES SHALL BE IN ACCORDANCE WITH **STD. NO. 560.01**

DRIVEWAYS:
DRIVEWAYS SHALL BE CONSTRUCTED IN ACCORDANCE WITH STD. 848.02 USING 3 FOOT RADII OR RADII AS SHOWN ON THE PLANS. LOCATIONS OF DRIVES WILL BE AS SHOWN ON THE PLANS OR AS DIRECTED BY THE ENGINEER.

GUARDRAIL:
THE GUARDRAIL LOCATIONS SHOWN ON THE PLANS MAY BE ADJUSTED DURING CONSTRUCTION AS DIRECTED BY THE ENGINEER. THE CONTRACTOR SHOULD CONSULT WITH THE ENGINEER PRIOR TO ORDERING GUARDRAIL MATERIAL.

TEMPORARY SHORING:
SHORING REQUIRED FOR THE MAINTENANCE OF TRAFFIC WILL BE PAID FOR AS "EXTRA WORK" IN ACCORDANCE WITH SECTION 104-7.

END BENTS:
THE ENGINEER SHALL CHECK THE STRUCTURE END BENT PLANS, DETAILS, AND CROSS-SECTION PRIOR TO SETTING OF THE SLOPE STAKES FOR THE EMBANKMENT OR EXCAVATION APPROACHING A BRIDGE.

UTILITIES:
ANY RELOCATION OF EXISTING UTILITIES WILL BE ACCOMPLISHED BY OTHERS.

RIGHT-OF-WAY MARKERS:
ALL RIGHT-OF-WAY MARKERS ON THIS PROJECT SHALL BE PLACED BY OTHERS.

2024 ROADWAY ENGLISH STANDARD DRAWINGS:

EFFECTIVE: 08-11-2025
REV. 11-26-2025

The following Roadway Standards as appear in "Roadway Standard Drawings" Contracts Standards and Development Unit - N. C. Department of Transportation - Raleigh, N. C., Dated January 16, 2024 are applicable to this project and by reference hereby are considered a part of these plans:

STD.	TITLE
DIVISION 2 - EARTHWORK	
200.03	Method of Clearing - Method III
225.02	Guide for Grading Subgrade - Secondary and Local
225.04	Method of Obtaining Superelevation - Two Lane Pavement
DIVISION 3 - PIPE CULVERTS	
300.01	Method of Pipe Installation (Use Details in Lieu of Standards for Sheets 1 and 2 of 2)
310.10	Driveway Pipe Construction
DIVISION 4 - MAJOR STRUCTURES	
423.01	Bridge Approach Fills - Type 1 Approach Fill for Bridge Abutment
DIVISION 5 - SUBGRADE, BASES AND SHOULDERS	
560.01	Method of Shoulder Construction - High Side of Superelevated Curve - Method I
DIVISION 8 - INCIDENTALS	
840.00	Concrete Base Pad for Drainage Structures
840.29	Frames and Narrow Slot Flat Grates
840.35	Traffic Bearing Grated Drop Inlet
840.46	Traffic Bearing Precast Drainage Structure
840.66	Drainage Structure Steps
846.01	Concrete Curb, Gutter and Curb & Gutter
846.04	Drop Inlet Installation in Shoulder Berm Gutter
848.02	Driveway Turnout
850.11	Guide for Berm Drainage Outlet - 24" and 30" Pipe
862.01	Guardrail Placement (Use Details in Lieu of Standards for Sheets 4, 6, and 11 of 15)
862.02	Guardrail Installation (Use Detail in Lieu of Standard for Sheet 5 of 9)
862.03	Structure Anchor Units
876.01	Rip Rap in Channels and Ditches
876.02	Guide for Rip Rap at Pipe Outlets
876.04	Drainage Ditches with Class 'B' Rip Rap

HB-0050
1A

NORTH CAROLINA
DEPARTMENT OF TRANSPORTATION
ASHE COUNTY

ROADWAY DESIGN UNIT

ROADWAY DESIGN ENGINEER
NORTH CAROLINA PROFESSIONAL SEAL 043023 ENGINEER DAVID V. JANOSKO
DocuSigned by: David Janosko 7/17/2026
D35DCEF8D8E0466...

PREPARED BY
rs consultants, inc.
5444 Wade Park Blvd.
Suite 160
Raleigh, NC 27607
NC License Number : C-3239

DOCUMENT NOT CONSIDERED FINAL UNLESS ALL SIGNATURES COMPLETED

REVISIONS

05/29/25

HB-0050
1B

Note: Not to Scale

STATE OF NORTH CAROLINA, DIVISION OF HIGHWAYS

CONVENTIONAL PLAN SHEET SYMBOLS

BOUNDARIES AND PROPERTY:

- State Line
- County Line
- Township Line
- City Line
- Reservation Line
- Property Line
- Existing Iron Pin (EIP)
- Computed Property Corner
- Existing Concrete Monument (ECM)
- Parcel / Sequence Number
- Existing Fence Line
- Proposed Woven Wire Fence
- Proposed Chain Link Fence
- Proposed Barbed Wire Fence
- Existing Wetland Boundary
- Proposed Wetland Boundary
- Existing Endangered Animal Boundary
- Existing Endangered Plant Boundary
- Existing Historic Property Boundary
- Known Contamination Area: Soil
- Potential Contamination Area: Soil
- Known Contamination Area: Water
- Potential Contamination Area: Water
- Contaminated Site: Known or Potential

BUILDINGS AND OTHER CULTURE:

- Gas Pump Vent or U/G Tank Cap
- Sign
- Well
- Small Mine
- Foundation
- Area Outline
- Cemetery
- Building
- School
- Church
- Dam

HYDROLOGY:

- Stream or Body of Water
- Hydro, Pool or Reservoir
- Jurisdictional Stream
- Buffer Zone 1
- Buffer Zone 2
- Flow Arrow
- Disappearing Stream
- Spring
- Wetland
- Proposed Lateral, Tail, Head Ditch
- False Sump

RAILROADS:

- Standard Gauge
- RR Signal Milepost
- Switch
- RR Abandoned
- RR Dismantled

RIGHT OF WAY & PROJECT CONTROL:

- Primary Horiz Control Point
- Primary Horiz and Vert Control Point
- Secondary Horiz and Vert Control Point
- Vertical Benchmark
- Existing Right of Way Monument
- Proposed Right of Way Monument (Rebar and Cap)
- Proposed Right of Way Monument (Concrete)
- Existing Permanent Easement Monument
- Proposed Permanent Easement Monument (Rebar and Cap)
- Existing C/A Monument
- Proposed C/A Monument (Rebar and Cap)
- Proposed C/A Monument (Concrete)
- Existing Right of Way Line
- Proposed Right of Way Line
- Existing Control of Access Line
- Proposed Control of Access Line
- Proposed ROW and CA Line
- Existing Easement Line
- Proposed Temporary Construction Easement
- Permanent Construction Easement
- Proposed Temporary Drainage Easement
- Proposed Permanent Drainage Easement
- Proposed Permanent Drainage/Utility Easement
- Proposed Permanent Utility Easement
- Proposed Temporary Utility Easement
- Proposed Aerial Utility Easement

ROADS AND RELATED FEATURES:

- Existing Edge of Pavement
- Existing Curb
- Proposed Slope Stakes Cut
- Proposed Slope Stakes Fill
- Proposed Curb Ramp
- Existing Metal Guardrail
- Proposed Guardrail
- Existing Cable Guiderail
- Proposed Cable Guiderail
- Equality Symbol
- Pavement Removal

VEGETATION:

- Single Tree
- Single Shrub
- Hedge
- Woods Line
- Orchard
- Vineyard

EXISTING STRUCTURES:

MAJOR:

- Bridge, Tunnel or Box Culvert
- Bridge Wing Wall, Head Wall and End Wall

MINOR:

- Head and End Wall
- Pipe Culvert
- Footbridge
- Drainage Box: Catch Basin, DI or JB
- Paved Ditch Gutter
- Storm Sewer Manhole
- Storm Sewer

UTILITIES:

** SUE - Subsurface Utility Engineering*
LOS - Level of Service - A,B,C or D (Accuracy)

POWER:

- Existing Power Pole
- Proposed Power Pole
- Existing Joint Use Pole
- Proposed Joint Use Pole
- Power Manhole
- Power Line Tower
- Power Transformer
- U/G Power Cable Hand Hole
- H-Frame Pole
- U/G Power Line Test Hole (SUE - LOS A)*
- U/G Power Line (SUE - LOS B)*
- U/G Power Line (SUE - LOS C)*
- U/G Power Line (SUE - LOS D)*

TELEPHONE:

- Existing Telephone Pole
- Proposed Telephone Pole
- Telephone Manhole
- Telephone Pedestal
- Telephone Cell Tower
- U/G Telephone Cable Hand Hole
- U/G Telephone Test Hole (SUE - LOS A)*
- U/G Telephone Cable (SUE - LOS B)*
- U/G Telephone Cable (SUE - LOS C)*
- U/G Telephone Cable (SUE - LOS D)*
- U/G Telephone Conduit (SUE - LOS B)*
- U/G Telephone Conduit (SUE - LOS C)*
- U/G Telephone Conduit (SUE - LOS D)*
- U/G Fiber Optics Cable (SUE - LOS B)*
- U/G Fiber Optics Cable (SUE - LOS C)*
- U/G Fiber Optics Cable (SUE - LOS D)*

WATER:

- Water Manhole
- Water Meter
- Water Valve
- Water Hydrant
- U/G Water Line Test Hole (SUE - LOS A)*
- U/G Water Line (SUE - LOS B)*
- U/G Water Line (SUE - LOS C)*
- U/G Water Line (SUE - LOS D)*
- Above Ground Water Line

TV:

- TV Pedestal
- TV Tower
- U/G TV Cable Hand Hole
- U/G TV Test Hole (SUE - LOS A)*
- U/G TV Cable (SUE - LOS B)*
- U/G TV Cable (SUE - LOS C)*
- U/G TV Cable (SUE - LOS D)*
- U/G Fiber Optic Cable (SUE - LOS B)*
- U/G Fiber Optic Cable (SUE - LOS C)*
- U/G Fiber Optic Cable (SUE - LOS D)*

GAS:

- Gas Valve
- Gas Meter
- U/G Gas Line Test Hole (SUE - LOS A)*
- U/G Gas Line (SUE - LOS B)*
- U/G Gas Line (SUE - LOS C)*
- U/G Gas Line (SUE - LOS D)*
- Above Ground Gas Line

SANITARY SEWER:

- Sanitary Sewer Manhole
- Sanitary Sewer Cleanout
- U/G Sanitary Sewer Line
- Above Ground Sanitary Sewer
- SS Force Main Line Test Hole (SUE - LOS A)*
- SS Force Main Line (SUE - LOS B)*
- SS Force Main Line (SUE - LOS C)*
- SS Force Main Line (SUE - LOS D)*

MISCELLANEOUS:

- Utility Pole
- Utility Pole with Base
- Utility Located Object
- Utility Traffic Signal Box
- Utility Unknown U/G Line (SUE - LOS B)*
- U/G Tank; Water, Gas, Oil
- Underground Storage Tank, Approx. Loc.
- A/G Tank; Water, Gas, Oil
- Geoenvironmental Boring
- Abandoned According to Utility Records — AATUR
- End of Information — E.O.I.

Docusign Envelope ID: 662A03FC-75BC-8F89-8397-F2E79272B793

11/14/23

PAVEMENT SCHEDULE	
A	6" PORTLAND CEMENT CONCRETE PAVEMENT.
C1	PROP. APPROX. 1½" ASPHALT CONCRETE SURFACE COURSE, TYPE S9.5B, AT AN AVERAGE RATE OF 165 LBS. PER SQ. YD.
C2	PROP. APPROX. 3" ASPHALT CONCRETE SURFACE COURSE, TYPE S9.5B, AT AN AVERAGE RATE OF 165 LBS. PER SQ. YD. IN EACH OF TWO LAYERS.
C3	PROP. VAR. DEPTH ASPHALT CONCRETE SURFACE COURSE, TYPE S9.5B, AT AN AVERAGE RATE OF 110 LBS. PER SQ. YD. PER 1" DEPTH. TO BE PLACED IN LAYERS NOT LESS THAN 1" OR GREATER THAN 1½" IN DEPTH.
E1	PROP. APPROX. 4" ASPHALT CONCRETE BASE COURSE, TYPE B25.0C, AT AN AVERAGE RATE OF 456 LBS. PER SQ. YD.
E2	PROP. VAR. DEPTH ASPHALT CONCRETE BASE COURSE, TYPE B25.0C, AT AN AVERAGE RATE OF 114 LBS. PER SQ. YD. PER 1" DEPTH. TO BE PLACED IN LAYERS NOT LESS THAN 3" OR GREATER THAN 5½" IN DEPTH.
J1	8" AGGREGATE BASE COURSE.
R	SHOULDER BERM GUTTER
T	EARTH MATERIAL.
U	EXISTING PAVEMENT.
V	INCIDENTAL OR 1.5" MILLING.
W	VARIABLE DEPTH ASPHALT PAVEMENT (SEE DETAIL SHOWING METHOD OF WEDGING).

NOTE: PAVEMENT EDGE SLOPES ARE 1:1 UNLESS SHOWN OTHERWISE.

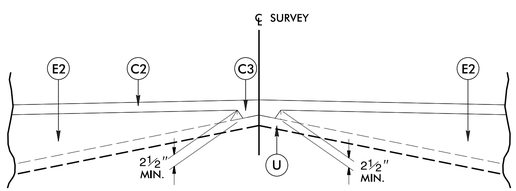

Detail Showing Method of Wedging

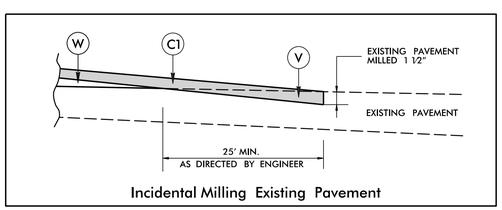

Incidental Milling Existing Pavement

℄ –L– SR 1563 (CLIFTON RD.)

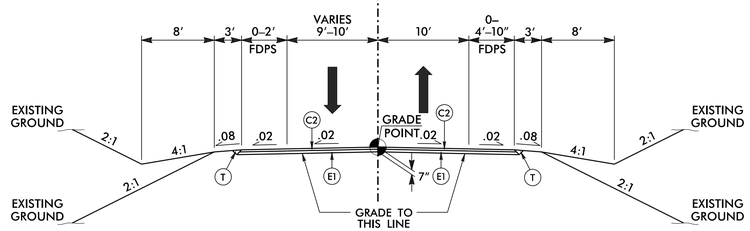

TYPICAL SECTION NO. 1

–L– STA. 13+15.00 TO –L– STA. 14+97.75

–L– STA. 17+10.25 TO –L– STA. 20+25.00

℄ –L– SR 1563 (CLIFTON RD.)

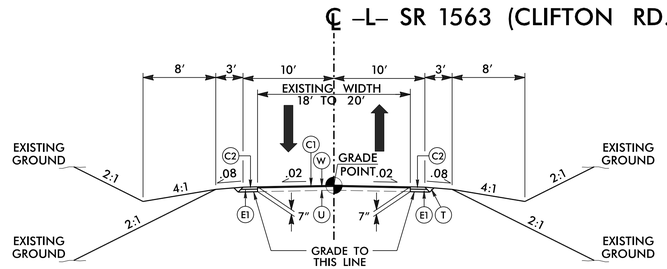

TYPICAL SECTION NO. 2

–L– STA. 20+25.00 TO –L– STA. 20+50.00

℄ –L– SR 1563 (CLIFTON RD.)

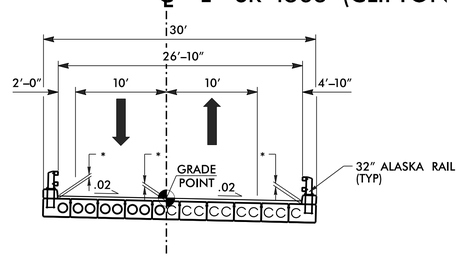

TYPICAL SECTION NO. 3

–L– STA. 14+97.75 (BEGIN BRIDGE) TO –L– STA. 17+10.25 (END BRIDGE)

*SEE STRUCTURE PLANS FOR 3.5" (ASSUMED) CONCRETE OVERLAY

℄ –DR1–

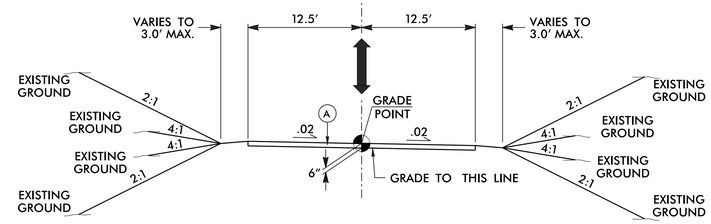

TYPICAL SECTION NO. 4

–DR1– STA. 10+30.00 TO –DR1– STA. 11+16.61

℄ –DR2–

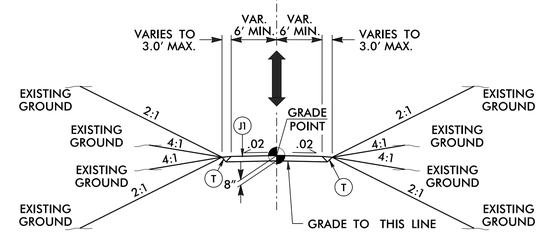

TYPICAL SECTION NO. 5

–DR2– STA. 2+50.00 TO –DR2– STA. 3+93.00

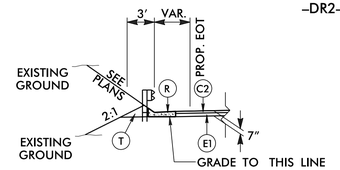

SHOULDER BERM GUTTER DETAIL

(USE IN CONJUCTION WITH TYP. NO. 1 AND 2)

SEE PLAN FOR LOCATIONS

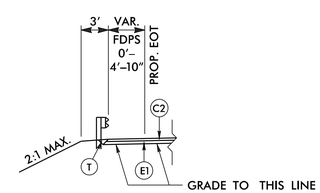

GUARDRAIL AND PAVED SHOULDER DETAIL

SEE PLAN FOR LOCATIONS

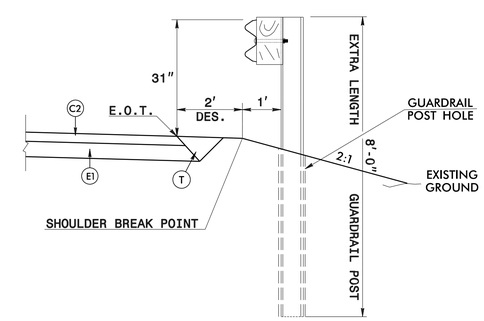

8' GUARDRAIL POST ON 2:1 SLOPE

–L– STA. 12+95.00 TO –L– STA. 13+30.00, RIGHT

HB-0050

2A-1

NORTH CAROLINA DEPARTMENT OF TRANSPORTATION ASHE COUNTY

ROADWAY DESIGN UNIT

ROADWAY DESIGN ENGINEER

NORTH CAROLINA PROFESSIONAL SEAL 043023 ENGINEER DAVID V. JANOSKO

DocuSigned by: David Janosko 7/17/2026

PAVEMENT DESIGN ENGINEER

NORTH CAROLINA PROFESSIONAL SEAL 049851 ENGINEER RAMIE A. SHAW

DocuSigned by: Ramie Shaw 7/22/2026

PREPARED BY

ms consultants, inc.
5444 Wade Park Blvd.
Suite 160
Raleigh, NC 27607
NC License Number: C-3230

DOCUMENT NOT CONSIDERED FINAL UNLESS ALL SIGNATURES COMPLETED

REVISIONS

Docusign Envelope ID: 7B61FCA7-D73E-86EC-8181-E3221CC8A018

11/14/23

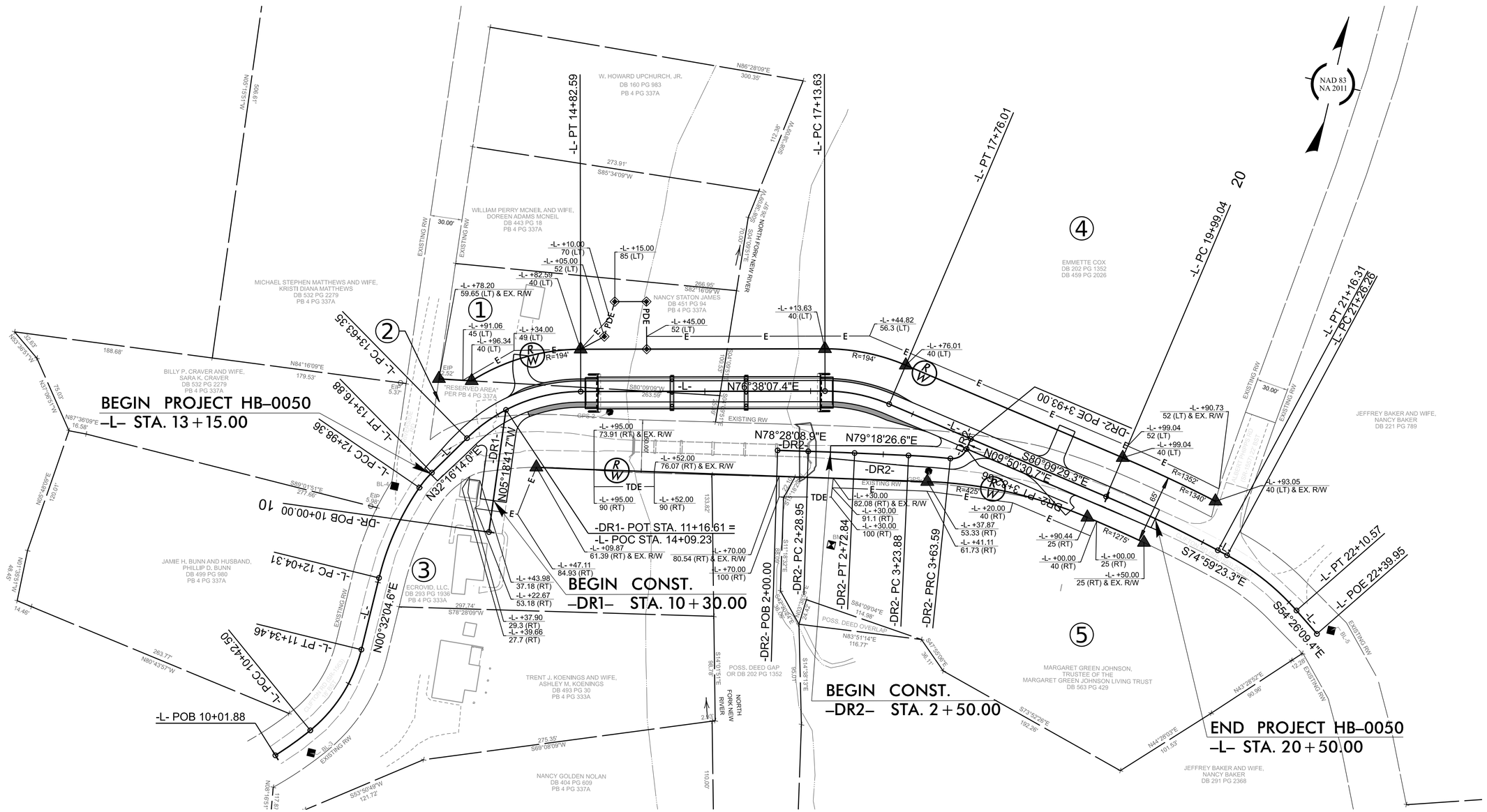

CUR DATA -L-	CUR DATA -L-	CUR DATA -L-	CUR DATA -L-	CUR DATA -L-	CUR DATA -L-	CUR DATA -L-	CUR DATA -L-	CUR DATA -DR2-	CUR DATA -DR2-	CUR DATA -DR2-
PIc 10+22.21	PIc 10+90.16	PIc 12+51.85	PIc 13+07.65	PIc 14+26.14	PIc 17+45.25	PIc 20+57.71	PIc 21+68.87	PIc 2+50.90	PIc 3+43.74	PIc 3+74.66
Δc = 07°03'11.8" (LT)	Δc = 37°06'13.5" (LT)	Δc = 20°33'58.7" (RT)	Δc = 11°10'10.8" (RT)	Δc = 44°21'53.4" (RT)	Δc = 23°12'23.3" (RT)	Δc = 05°10'06.0" (RT)	Δc = 20°33'13.9" (RT)	Δc = 00°50'17.7" (RT)	Δc = 03°22'12.9" (RT)	Δc = 72°50'08.7" (LT)
D = 17°21'44.5"	D = 40°20'56.9"	D = 21°52'07.0"	D = 60°18'40.8"	D = 37°12'18.2"	D = 37°12'18.2"	D = 04°24'26.5"	D = 24°22'47.1"	D = 01°54'35.5"	D = 08°29'17.7"	D = 21°58'18.7"
Lc = 40.62	Lc = 91.96	Lc = 94.04	Lc = 18.52	Lc = 119.24	Lc = 62.37	Lc = 117.27	Lc = 84.31	Lc = 43.89	Lc = 39.70	Lc = 19.07
Tc = 20.34	Tc = 47.66	Tc = 47.53	Tc = 9.29	Tc = 62.79	Tc = 31.62	Tc = 58.67	Tc = 42.61	Tc = 21.95	Tc = 19.86	Tc = 11.07
R = 330	R = 142	R = 262	R = 95	R = 154	R = 154	R = 1,300	R = 235.01	R = 3,000	R = 675	R = 15
SE = EXIST	SE = EXIST	SE = EXIST	SE = EXIST	SE = 0.040	SE = 0.020	SE = EXIST	SE = EXIST	SE = NC	SE = NC	SE = NC
				RO = 56	RO = 56					
				DS = 25 MPH*	DS = 25 MPH*					
				* DESIGN EXCEPTION REQUIRED						

GEOMETRY AND RIGHT-OF-WAY DETAIL

SEE SHEET 4 FOR PLAN

REVISIONS

HB-0050

2B-1

NORTH CAROLINA
DEPARTMENT OF TRANSPORTATION
ASHE COUNTY

ROADWAY DESIGN UNIT

ROADWAY DESIGN ENGINEER
NORTH CAROLINA PROFESSIONAL SEAL 043023 ENGINEER DAVID V. JANOSKO
DocuSigned by: David Janosko
7/17/2026

HYDRAULICS ENGINEER
NORTH CAROLINA PROFESSIONAL SEAL 021162 ENGINEER W. HERBERT TURNER, JR.
DocuSigned by: Herb Turner
7/17/2026

PREPARED BY
ms consultants, inc.
5444 Wade Park Blvd.
Suite 160
Raleigh, NC 27607
NC License Number: C-3230

MI ENGINEERING
1011 SCHAUB DRIVE, SUITE 100
RALEIGH, NC 27606
(919) 851-6606
FIRM PE NUMBER: P-0671

DOCUMENT NOT CONSIDERED FINAL UNLESS ALL SIGNATURES COMPLETED

Docusign Envelope ID: D0A3383B-23F8-8CCF-8264-647414B17419

PROJECT REFERENCE NO.	SHEET NO.

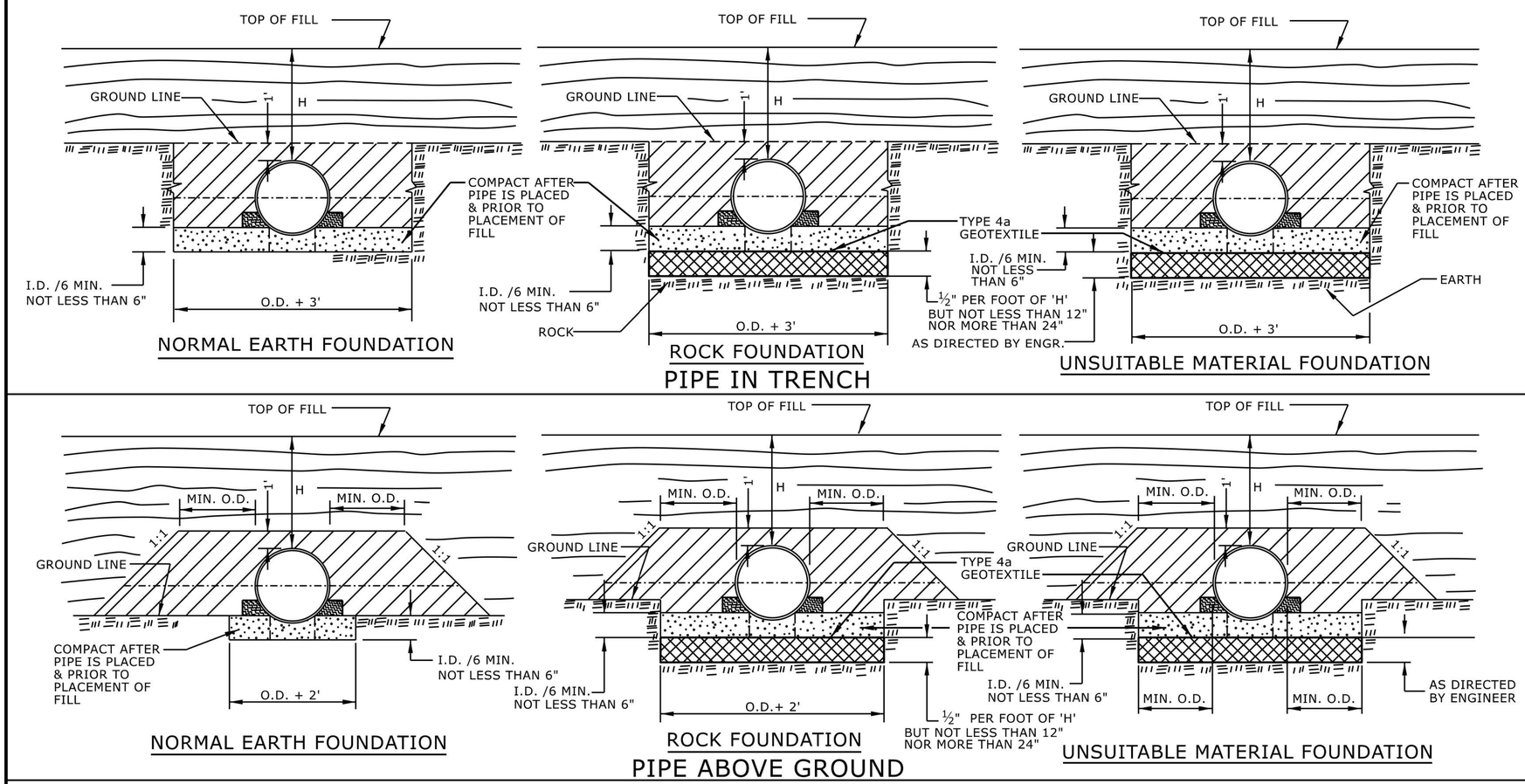

GENERAL NOTES:

I.D. = THE MAXIMUM HORIZONTAL INSIDE DIAMETER DIMENSION.

O.D. = THE MAXIMUM HORIZONTAL OUTSIDE DIAMETER DIMENSION.

H = THE FILL HEIGHT MEASURED VERTICALLY AT ANY POINT ALONG THE PIPE FROM THE TOP OF THE PIPE TO THE TOP OF THE EMBANKMENT AT THAT POINT.

APPROVED SUITABLE LOCAL MATERIAL.

TAKE CARE TO FULLY COMPACT HAUNCH ZONE OF PIPE BACKFILL.

LOOSELY PLACED SELECT MATERIAL CLASS III OR CLASS II, TYPE 1 FOR PIPE BEDDING. LEAVE SECTION DIRECTLY BENEATH PIPE UNCOMPACTED AS PIPE SEATING AND BACKFILL WILL ACCOMPLISH COMPACTION.

DO NOT OPERATE HEAVY EQUIPMENT OVER ANY PIPE CULVERT UNTIL THE PIPE CULVERT HAS BEEN PROPERLY BACKFILLED AND COVERED WITH AT LEAST 3 FEET OF APPROVED MATERIAL.

REFER TO NCDOT PIPE MATERIAL SELECTION GUIDE AND STANDARD SPECIFICATIONS FOR ALLOWABLE PIPE FILL HEIGHTS AND PIPE SPECIFICATIONS.

SPRINGLINE OF PIPE

SELECT BACKFILL MATERIAL CLASS III OR CLASS II, TYPE 1 ABOVE AND BELOW SPRINGLINE.

UNDISTURBED EARTH MATERIAL

SELECT MATERIAL CLASS V OR VI FOR FOUNDATION CONDITIONING. ENCAPSULATE WITH TYPE IV GEOTEXTILE AS DIRECTED BY THE ENGINEER.

STATE OF NORTH CAROLINA
DEPT. OF TRANSPORTATION
DIVISION OF HIGHWAYS
RALEIGH, N.C.

ROADWAY DETAIL DRAWING FOR

METHOD OF PIPE INSTALLATION

FLEXIBLE PIPE

NORTH CAROLINA PROFESSIONAL SEAL 033144 ENGINEER NICOLE M. HACKLER

Signed by: Nicole M Hackler
5884323D34164C8...

SHEET 1 OF 2

300.01

DOCUMENT NOT CONSIDERED FINAL UNLESS ALL SIGNATURES COMPLETED

CONTRACTS STANDARDS AND DEVELOPMENT UNIT
Office 919-707-6950 FAX 919-250-4119

SEE TITLE BLOCK

ORIGINAL BY:	S.CALHOUN	DATE:	7-25-2024
MODIFIED BY:		DATE:	
CHECKED BY:		DATE:	
FILE SPEC.:			

Docusign Envelope ID: D0A3383B-23F8-8CCF-8264-647414B17419

PROJECT REFERENCE NO.	SHEET NO.
HB-0050	

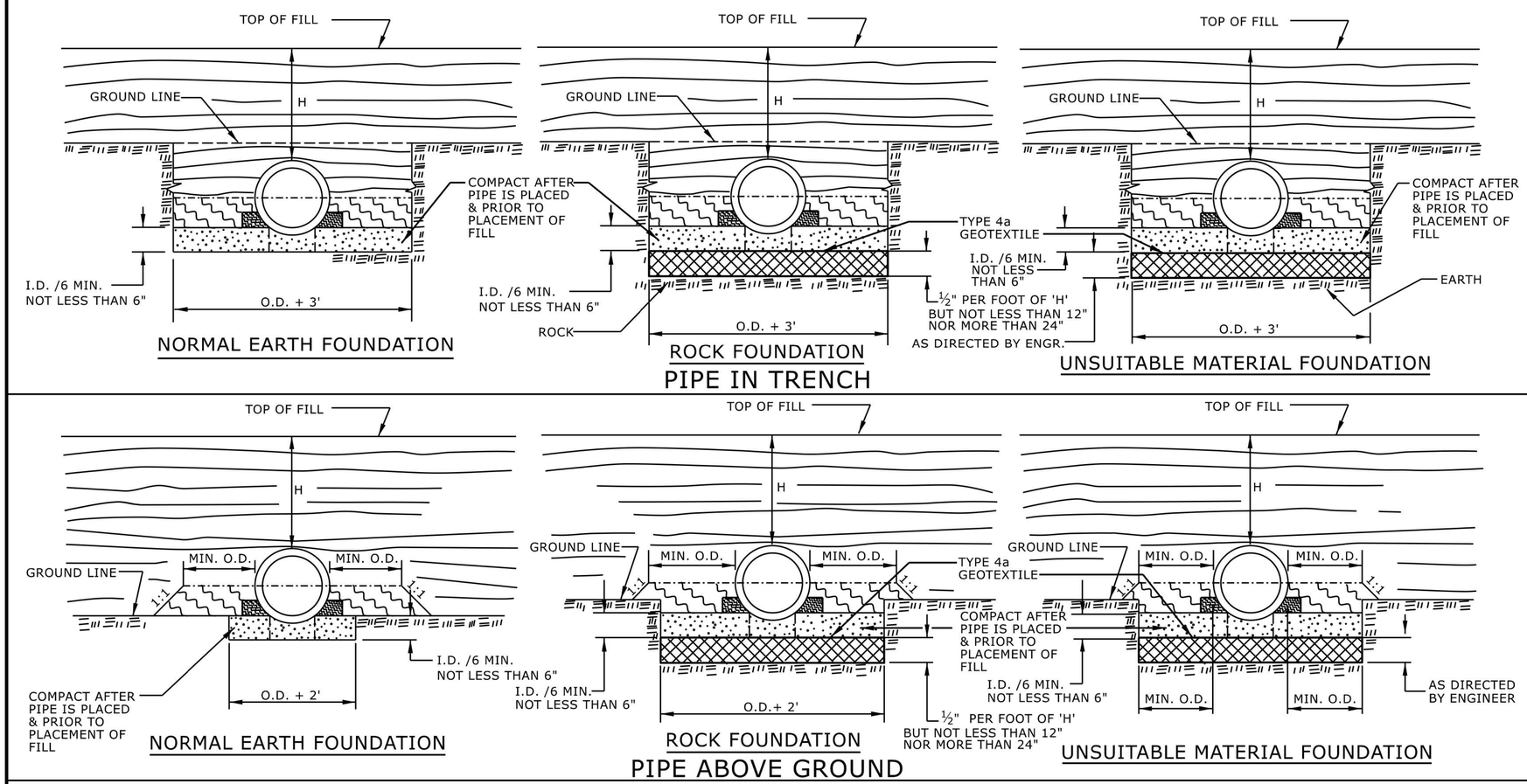

GENERAL NOTES:

I.D. = THE MAXIMUM HORIZONTAL INSIDE DIAMETER DIMENSION.

O.D. = THE MAXIMUM HORIZONTAL OUTSIDE DIAMETER DIMENSION.

H = THE FILL HEIGHT MEASURED VERTICALLY AT ANY POINT ALONG THE PIPE FROM THE TOP OF THE PIPE TO THE TOP OF THE EMBANKMENT AT THAT POINT.

APPROVED SUITABLE LOCAL MATERIAL.

TAKE CARE TO FULLY COMPACT HAUNCH ZONE OF PIPE BACKFILL.

LOOSELY PLACED SELECT MATERIAL CLASS III OR CLASS II, TYPE 1 FOR PIPE BEDDING. LEAVE SECTION DIRECTLY BENEATH PIPE UNCOMPACTED AS PIPE SEATING AND BACKFILL WILL ACCOMPLISH COMPACTION.

DO NOT OPERATE HEAVY EQUIPMENT OVER ANY PIPE CULVERT UNTIL THE PIPE CULVERT HAS BEEN PROPERLY BACKFILLED AND COVERED WITH AT LEAST 3 FEET OF APPROVED MATERIAL.

REFER TO NCDOT PIPE MATERIAL SELECTION GUIDE AND STANDARD SPECIFICATIONS FOR ALLOWABLE PIPE FILL HEIGHTS AND PIPE SPECIFICATIONS.

SPRINGLINE OF PIPE

SELECT BACKFILL MATERIAL CLASS III OR CLASS II, BELOW SPRINGLINE.

UNDISTURBED EARTH MATERIAL

SELECT MATERIAL CLASS V OR VI FOR FOUNDATION CONDITIONING. ENCAPSULATE WITH TYPE IV GEOTEXTILE AS DIRECTED BY THE ENGINEER.

STATE OF NORTH CAROLINA
DEPT. OF TRANSPORTATION
DIVISION OF HIGHWAYS
RALEIGH, N.C.

ROADWAY DETAIL DRAWING FOR

METHOD OF PIPE INSTALLATION

RIGID PIPE

NORTH CAROLINA PROFESSIONAL SEAL 033144 ENGINEER NICOLE M. HACKLER

Signed by: Nicole M Hackler
5884323D34164C5...

SHEET 2 OF 2

300.01

DOCUMENT NOT CONSIDERED FINAL UNLESS ALL SIGNATURES COMPLETED

CONTRACTS STANDARDS AND DEVELOPMENT UNIT
Office 919-707-6950 FAX 919-250-4119

SEE TITLE BLOCK

ORIGINAL BY:	S.CALHOUN	DATE:	7-25-2024
MODIFIED BY:		DATE:	
CHECKED BY:		DATE:	
FILE SPEC.:			

Docusign Envelope ID: D0A3383B-23F8-8CCF-8264-647414B17419

PROJECT REFERENCE NO.	SHEET NO.

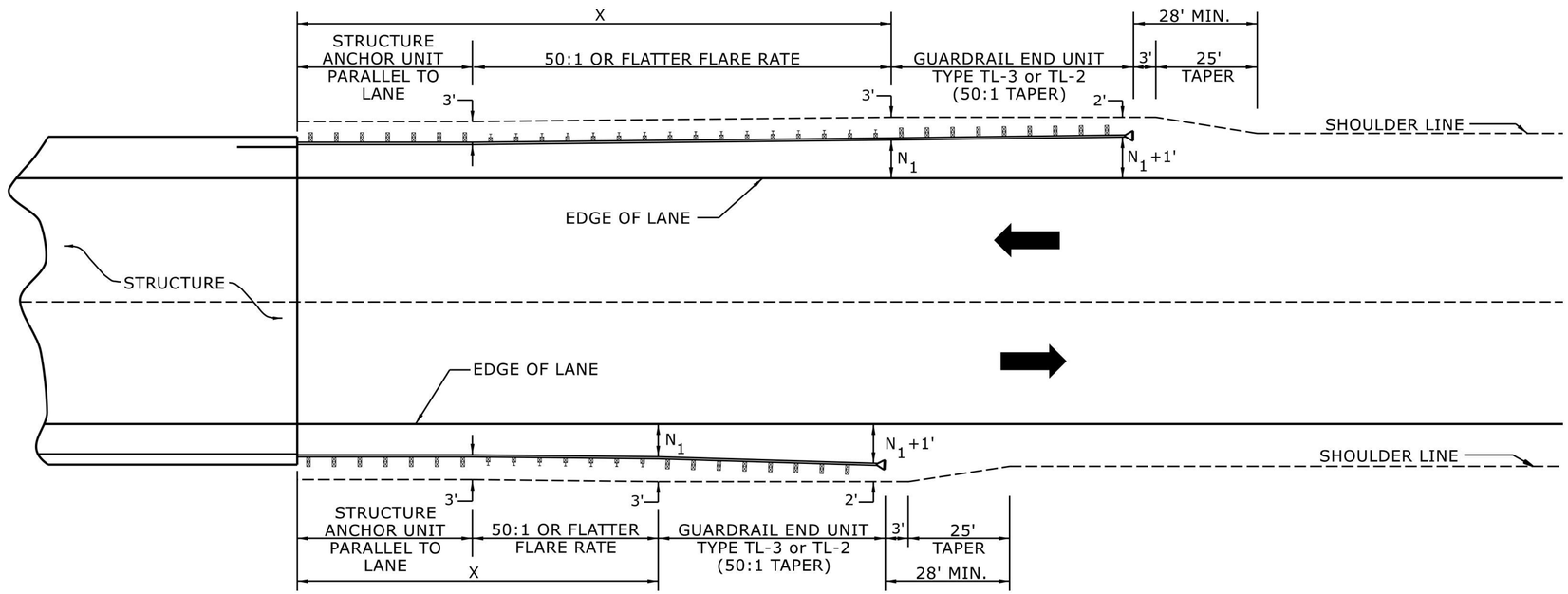

USE FLARE RATE AS THE CONTROL IF THE "N_1" DISTANCE IS NOT OBTAINED.
("N_1" IS BASED ON SHOULDER WIDTHS IN THE ROADWAY DESIGN MANUAL)

SEE STD. 862.03 FOR STRUCTURE ANCHOR UNITS

FOR POSTED SPEEDS ≥ 45MPH USE GREU TYPE TL-3
FOR POSTED SPEEDS < 45MPH USE GREU TYPE TL-2

GUARDRAIL LENGTH OF NEED (X) IS CALCULATED BASED ON THE AASHTO ROADSIDE DESIGN GUIDE.

LENGTHS AND OFFSETS FOR PROPOSED GUARDRAIL AT TWO LANE - TWO WAY LOCATIONS

STATE OF
NORTH CAROLINA
DEPT. OF TRANSPORTATION
DIVISION OF HIGHWAYS
RALEIGH, N.C.

ROADWAY DETAIL DRAWING FOR
GUARDRAIL PLACEMENT

NORTH CAROLINA PROFESSIONAL SEAL 033144 ENGINEER NICOLE M. HACKLER

Signed by:
Nicole M Hackler
5884323D34164C5...

SHEET 4 OF 15
862D01

DOCUMENT NOT CONSIDERED FINAL
UNLESS ALL SIGNATURES COMPLETED

CONTRACTS STANDARDS AND DEVELOPMENT UNIT
Office 919-707-6950 FAX 919-250-4119

SEE TITLE BLOCK

ORIGINAL BY: S.CALHOUN DATE: 7-25-2024
MODIFIED BY: DATE:
CHECKED BY: DATE:
FILE SPEC.:

Docusign Envelope ID: D0A3383B-23F8-8CCF-8264-647414B17419

PROJECT REFERENCE NO.	SHEET NO.

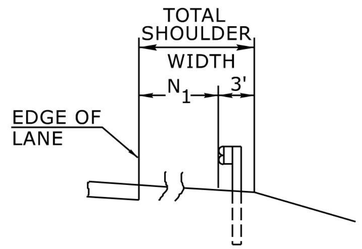

FILL SECTION

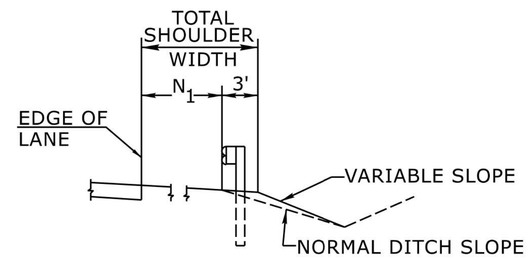

CUT SECTION

"N_1"= DISTANCE FROM EDGE OF LANE TO FACE OF GUARDRAIL WHERE GUARDRAIL IS PARALLEL TO LANE.

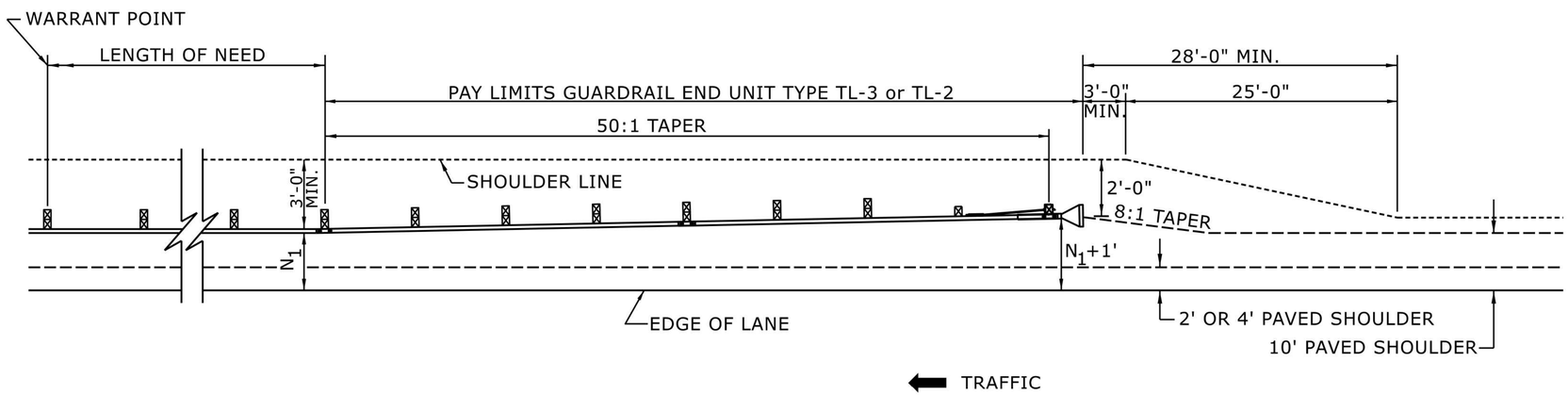

FOR POSTED SPEEDS ≥ 45mph USE GREU TYPE TL-3
FOR POSTED SPEEDS < 45mph USE GREU TYPE TL-2

DETAIL OF BEGINNING OF GUARDRAIL IN CUT OR FILL SECTION

STATE OF
NORTH CAROLINA
DEPT. OF TRANSPORTATION
DIVISION OF HIGHWAYS
RALEIGH, N.C.

ROADWAY DETAIL DRAWING FOR
GUARDRAIL PLACEMENT

SHEET 6 OF 15

862D01

NORTH CAROLINA PROFESSIONAL SEAL 033144 ENGINEER NICOLE M. HACKLER

Signed by:
Nicole M Hackler
5884323D34164C6...

DOCUMENT NOT CONSIDERED FINAL
UNLESS ALL SIGNATURES COMPLETED

**CONTRACTS STANDARDS
AND DEVELOPMENT UNIT**
Office 919-707-6950 FAX 919-250-4119

SEE TITLE BLOCK

ORIGINAL BY:	S.CALHOUN	DATE:	7-25-2024
MODIFIED BY:		DATE:	
CHECKED BY:		DATE:	
FILE SPEC.:			

Docusign Envelope ID: D0A3383B-23F8-8CCF-8264-647414B17419

PROJECT REFERENCE NO.	SHEET NO.
HB-0050	2C-5

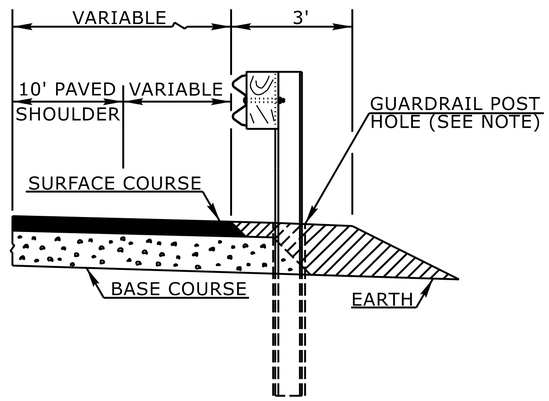

FLEXIBLE PAVED SHOULDER

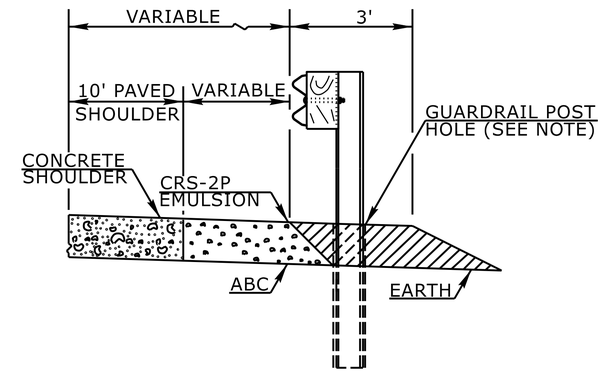

CONCRETE PAVED SHOULDER

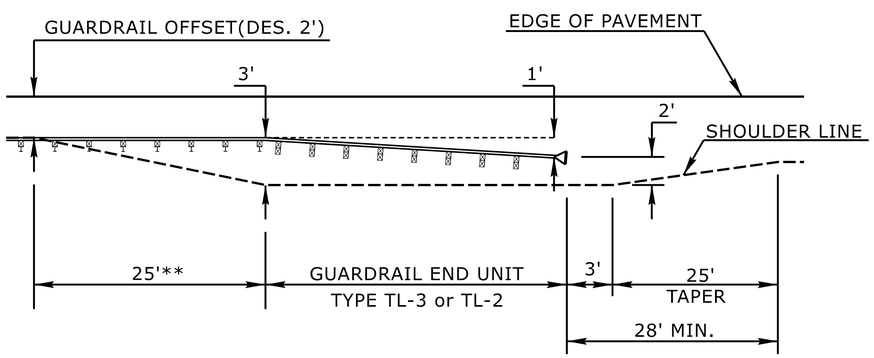

8' GUARDRAIL POST ON 2:1 SLOPE-END UNIT TRANSITION*
PLAN VIEW

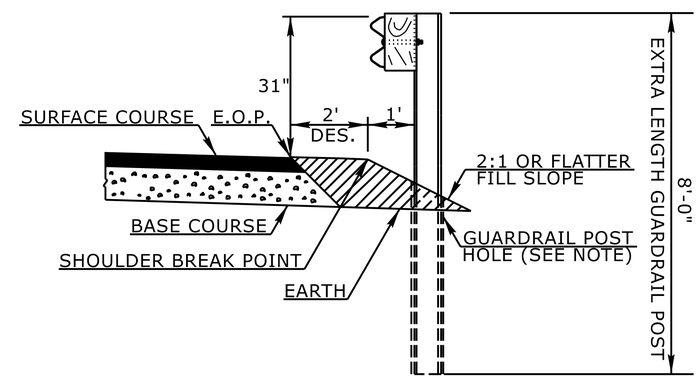

8' GUARDRAIL POST ON 2:1 SLOPE*

* THE 8' GUARDRAIL POST ON 2:1 SLOPE DETAIL IS INTENDED FOR USE ONLY IN SEVERELY CONSTRAINED AREAS WITH A POSTED SPEED ≤ 60 MPH. GUARDRAIL END UNITS MAY NOT BE PLACED ON THE 2:1 SLOPE AND MUST TRANSITION TO THE SHOULDER.
** 8' GUARDRAIL POST SHOULD BE USED IN THIS RANGE

NOTE:
WHEN WOODEN GUARDRAIL POSTS ARE USED, DRILL HOLES THROUGH EARTH MATERIAL AND BASE COURSE.THE POST MAY THEN BE DRIVEN TO THE PROPER DEPTH. DRILL THE HOLE OF SUFFICIENT SIZE TO ACCOMMODATE THE PARTICULAR POST BEING USED. BACKFILL AND TAMP HOLES USING THE EXCAVATED MATERIAL.

STATE OF
NORTH CAROLINA
DEPT. OF TRANSPORTATION
DIVISION OF HIGHWAYS
RALEIGH, N.C.

ROADWAY DETAIL DRAWING FOR
GUARDRAIL PLACEMENT

SHEET 11OF 15

862D01

DOCUMENT NOT CONSIDERED FINAL
UNLESS ALL SIGNATURES COMPLETED

CONTRACTS STANDARDS AND DEVELOPMENT UNIT
Office 919-707-6950 FAX 919-250-4119

SEE TITLE BLOCK

ORIGINAL BY:	L.SMITH	DATE:	10-14-2025
MODIFIED BY:		DATE:	
CHECKED BY:		DATE:	
FILE SPEC.:			

Docusign Envelope ID: D0A3383B-23F8-8CCF-8264-647414B17419

PROJECT REFERENCE NO.	SHEET NO.
HB-0050	2C-6

NOTE: IF EXISTING GUARDRAIL IS LOWER THAN 29″, USE AN ADDITIONAL 12′-6″ LONG SECTION OF GUARDRAIL, FOR EVERY 1″ OF HEIGHT DIFFERENCE, TO TRANSITION FROM EXISTING GUARDRAIL TO PROPOSED 31″ GUARDRAIL.

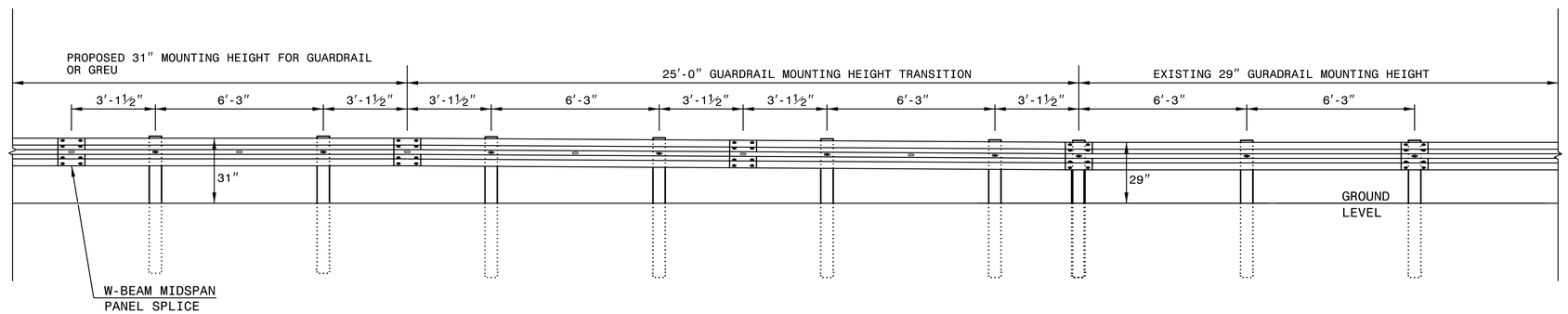

ELEVATION VIEW

TRANSITION FROM 29″ TO 31″ W-BEAM GUARDRAIL MOUNTING HEIGHT

STATE OF
NORTH CAROLINA
DEPT. OF TRANSPORTATION
DIVISION OF HIGHWAYS
RALEIGH, N.C.

ROADWAY DETAIL DRAWING FOR
GUARDRAIL INSTALLATION

SHEET 5 OF 9

862D02

NORTH CAROLINA PROFESSIONAL SEAL 033144 ENGINEER NICOLE M. HACKLER

Signed by: Nicole M Hackler
5884323D34164C9...

DOCUMENT NOT CONSIDERED FINAL UNLESS ALL SIGNATURES COMPLETED

CONTRACTS STANDARDS AND DEVELOPMENT UNIT
Office 919-707-8950 FAX 919-250-4119

SEE TITLE BLOCK

ORIGINAL BY: K. Aldridge DATE: 02-25
MODIFIED BY: DATE:
CHECKED BY: DATE:
FILE SPEC.:

05-FEB-2025 07:53
U:\Special Details Revisions\862D02 Detail\862D02.dgn
$$$$USERNAME$$$$

11/14/23

COMPUTED BY:	JEREMY MERRYMAN	DATE:	4/17/2025
CHECKED BY:	DAVID JANOSKO	DATE:	3/31/2026

STATE OF NORTH CAROLINA
DIVISION OF HIGHWAYS

HB-0050

3B-1

NORTH CAROLINA
DEPARTMENT OF TRANSPORTATION
ASHE COUNTY

ROADWAY DESIGN UNIT

PREPARED BY

ms consultants, inc.
5444 Wade Park Blvd.
Suite 160
Raleigh, NC 27607
NC License Number: C-3239

SUMMARY OF EARTHWORK
VOLUME IN CUBIC YARDS

STATION	STATION	UNCL. EXCAV.	EMBANK. 15%	BORROW	WASTE
–L– 13+15.00	–L– 14+97.75	144	99		45
–L– 17+10.25	–L– 20+50.00	375	230		145
–DR1– 10+30.00	–DR1– 11+15.95	40	3		37
–DR2– 2+50.00	–DR2– 3+93.00	129	0		129
SUBTOTALS:		688	332		356
MATERIAL FOR SHOULDER CONSTRUCTION					
LOSS DUE TO CLEARING & GRUBBING					
ADDITIONAL UNDERCUT					
WASTE IN LIEU OF BORROW					
PROJECT TOTALS:		688	332		356
EST. 5% TO REPLACE TOP SOIL ON BORROW PIT					
GRAND TOTALS:		688	332		356
SAY:		750			

EST. DDE =50 CY
EST. BORROW EXCAVATION =75 CY
EST. UNDERCUT (CONTINGENCY) =450 CY
EST. SELECT GRANULAR MATERIAL (CONTINGENCY) =400 CY
EST. GEOTEXTILE FOR SOIL STABILIZATION CONTINGENCY) =400 SY
EST. INCIDENTIAL STONE BASE =50 TONS

Earthwork quantities are calculated by the roadway designer. These earthwork quantities are based in part on subsurface data provided by the Geotechnical Engineering Unit.

Approximate quantities only. Unclassified Excavation, Borrow Excavation, Shoulder Borrow, Fine Grading, Clearing and Grubbing and Removal of Existing Pavement will be paid for at the contract lump sum price for "Grading."

SUMMARY OF EXISTING ASPHALT PAVEMENT REMOVAL

SURVEY LINE	STATION	STATION	LOCATION LT/RT/CL	YD^2
–L–	13+59.00	13+70.00	RT	5
–L–	14+00.00	15+31.00	RT	180
–L–	16+98.00	17+22.00	RT	27
			TOTAL:	212
			SAY:	220

SHOULDER BERM GUTTER SUMMARY

SURVEY LINE	STATION	STATION	LENGTH
–L–	17+21.00	17+54.41	33.4
		TOTAL:	33.4
		SAY:	35

"N" = DISTANCE FROM EDGE OF LANE TO FACE OF GUARDRAIL.
TOTAL SHOULDER WIDTH = DISTANCE FROM EDGE OF TRAVEL LANE TO SHOULDER BREAK POINT.
FLARE LENGTH = DISTANCE FROM LAST SECTION OF PARALLEL GUARDRAIL TO END OF GUARDRAIL.
W = TOTAL WIDTH OF FLARE FROM BEGINNING OF TAPER TO END OF GUARDRAIL.
G = GATING IMPACT ATTENUATOR TYPE 350
NG = NON–GATING IMPACT ATTENUATOR TYPE 350

GUARDRAIL SUMMARY

SURVEY LINE	BEG. STA.	END STA.	LOCATION	LENGTH			WARRANT POINT		"N" DIST. FROM E.O.L.	TOTAL SHOULDER WIDTH	FLARE LENGTH		W		ANCHORS									IMPACT ATTENUATOR TYPE 350			REMOVE EXISTING GUARDRAIL	REMOVE AND RESET EXISTING GUARDRAIL	REMARKS
				STRAIGHT	SHOP CURVED	DOUBLE FACE	APPROACH END	TRAILING END			APPROACH END	TRAILING END	APPROACH END	TRAILING END	GREU TL–2	TYPE III	CAT–1	TEMP. GREU TL–2	AT–1	IMPACT ATTN 350	TERMINAL END			EA	G	NG			
–L–	12+70	13+63	RT	93.0					2′–0″	3′–0″		25		0.5	1														APPROACH – TIE TO EXSITING GUARD RAIL
																													REMOVE EXISITING END UNIT (25′)
–L–	13+89	14+99	RT	85.0	25.0		14+97.75		4′–10″	7′–10″						1			1										GUARDRAIL SPECS AS SEEN IN 2C–4 THRU 2C–5
–L–	17+09	17+78	RT	69.0				17+10.25	4′–10″	7′–10″		25		0.5	1	1													
–L–	14+40	14+99	LT	59.0	18.0			14+97.75	2′–0″	5′–0″						1			1										
–L–	17+09	17+78	LT	69.0			17+10.25		2′–0″	5′–0″	25		0.5		1	1													
–DR2–	2+50	2+50	LT/RT	12.5																	2								
		SUBTOTAL		387.5	43.0										3	4			2		2								
		ANCHOR DEDUCTIONS																											
		GREU TL–2	3 @ 25′	–75																									
		TYPE III	4 @ 18.75′	–75																									
		AT–1	2 @ 6.25′	–12.5																									
		PROJECT TOTAL		225	43										3	4			2		2								
		SAY		250	75										3	4			2		2								

EXTRA GUARDRAIL POSTS = 5 EA

REVISIONS

RALC44f2LJ

COMPUTED BY:	Linda Johns, PE	DATE:	8-10-26
CHECKED BY:	W. Herbert Turner, Jr., PE	DATE:	8-10-26

NORTH CAROLINA DEPARTMENT OF TRANSPORTATION
DIVISION OF HIGHWAYS

PROJECT NO.	SHEET NO.
HB-0050	3D-1

Note: Invert Elevations indicated are for Bid Purposes only and shall not be used for project construction stakeout. See "Standard Specifications For Roads and Structures, Section 300-5".

LIST OF PIPES, ENDWALLS, ETC. (FOR PIPES 48 INCHES & UNDER)

| LINE & STATION | OFFSET | STRUCTURE NUMBER FROM | STRUCTURE NUMBER TO | TOP ELEVATION FT. | INVERT ELEVATION FT. | INVERT ELEVATION FT. | MINIMUM REQUIRED SLOPE % | Drainage Pipe (RCP, CSP, HDPE, PVC, or PP PIPE) SIZE / THICKNESS OR GAUGE: 15 | 18 | 24 | 30 | 36 | 42 | 48 | | DO NOT USE RCP | DO NOT USE CSP | DO NOT USE HDPE | DO NOT USE PVC | DO NOT USE PP PIPE | C. S. PIPE 15 (.064) | 18 (.064) | 24 (.064) | 30 (.079) | 36 (.079) | 42 (.109) | 48 (.109) | | R. C. PIPE CLASS III 15 | 18 | 24 | 30 | 36 | 42 | 48 | | R. C. PIPE CLASS IV 15 | 18 | 24 | 30 | 36 | 42 | 48 | | R. C. PIPE CLASS V 15 | 18 | 24 | 30 | 36 | 42 | 48 | | 15" SIDE DRAIN PIPE | 18" SIDE DRAIN PIPE | ENDWALLS STD. 826.01 OR 826.11 (UNLESS NOTED OTHERWISE) CY | REINFORCED ENDWALLS CY | DRAINAGE STRUCTURE MASONRY CY | QUANTITIES FOR DRAINAGE STRUCTURES (NOTE: TOTAL LIN. FT. FOR PAY QUANTITY SHALL BE A + (1.3 X B)) 0' THRU 5' EACH | A: 5' THRU 10' LIN. FT. | B: 10' AND ABOVE LIN. FT. | C.B. STD. 840.01 OR STD. 840.02 | FRAME, GRATES, AND HOOD STD. 840.03 GRATE TYPE E | F | G | CONCRETE TRANSITIONAL SECTION D.I. STD. 852.04 OR STD. 852.06 | C.B. STD. 852.05 | G.D.I. TYPE "B" STD. 840.18 OR STD. 840.27 | G.D.I. (W.S. SAG) FRAME W/ GRATE STD. 840.22 | G.D.I. (W.S. SAG) FRAME W/ 2 GRATES STD. 840.22 | G.D.I. (N.S. SAG) FRAME W/ GRATE STD. 840.24 | G.D.I. (N.S. SAG) FRAME W/ 2 GRATES STD. 840.24 | G.D.I. (N.S. FLAT) FRAME W/ GRATE STD. 840.29 | G.D.I. (N.S. FLAT) FRAME W/ 2 GRATES STD. 840.29 | DRIVEWAY D.I. STD. 840.30 | FRAME W/ GRATE FOR DRIVEWAY STD. 840.30 | T.B.D.I. STD. 840.35 | T.B.D.I. FOR STEEL GRATES STD. 840.36 | STEEL FRAME WITH TWO GRATES STD. 840.37 | TEMP STEEL PLATE COVER MASONRY DRAINAGE | 15" C.S. ELBOW | 18" C.S. ELBOW | 24" DRAINAGE PIPE ELBOW | BERM DITCH OUTLET STD. 850.11 (PER EACH) | PIPE CLEANOUT EA | PIPE REMOVAL LIN. FT. | REMARKS |
|---|---|---|---

Docusign Envelope ID: 6C837AB0-9C79-8CDC-82A5-CFA1FD182D78

11/14/23

DETAIL 4A
SPECIAL BASE DITCH
(Not to Scale)

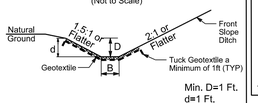

Min. D=1 Ft.
d=1 Ft.
B=See Below
Type of Liner= CL B Rip-Rap, Keyed-In

FROM L STA. 13+17.77 TO STA. 14+95 LT, B=0'-3'
75 TONS CL B, 180 SY GEOTEXTILE

DETAIL 4B
STANDARD 'V' DITCH
(Not to Scale)

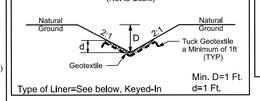

Min. D=1 Ft.
d=1 Ft.
Type of Liner=See below, Keyed-In

FROM L STA. 16+89 TO STA. 17+03, 34' RT.
L=14', S=0.31%, DDE= 4 CY
8 TONS CL I, 13 SY GEOTEXTILE
FROM L STA. 17+03 TO STA. 17+15, 34' RT
L=12 ', S=0.31%, DDE=1 CY
2 TONS CL B, 5 SY GEOTEXTILE
FROM DR2 STA. 2+20 TO STA. 2+35 RT.
L=15', S=0.52%, DDE= 5 CY
12 TONS CL I, 14 SY GEOTEXTILE
FROM DR2 STA. 2+35 TO STA. 2+50 RT
L=14 ', S=0.52%, DDE=5 CY
2.5 TONS CL B, 11 SY GEOTEXTILE

DETAIL 4C
STANDARD 'V' DITCH
(Not to Scale)

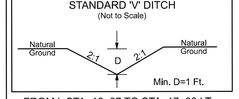

Min. D=1 Ft.

FROM L STA. 16+87 TO STA. 17+09 LT
L=20 ', S=2.41%, DDE=4.6 CY

DETAIL 4D
STANDARD BASE DITCH
(Not to Scale)

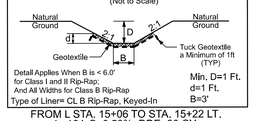

Detail Applies When B is < 6.0'
for Class I and II Rip-Rap;
And All Widths for Class B Rip-Rap
Min. D=1 Ft.
d=1 Ft.
B=3'
Type of Liner= CL B Rip-Rap, Keyed-In

FROM L STA. 15+06 TO STA. 15+22 LT.
L=16 ', S=0.50%, DDE=30 CY
7 TONS CL B, 22 SY GEOTEXTILE

DETAIL 4E
SPECIAL 'V' DITCH
(Not to Scale)

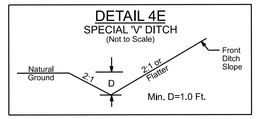

Min. D=1.0 Ft.

FROM L STA. 17+09 TO STA. 20+35 LT
FROM L STA. 17+14 TO STA. 18+20 RT
FROM L STA. 18+73.81 TO STA. 19+40 RT
FROM L STA. 19+84 TO STA. 20+25 RT
FROM DR2 STA. 2+50 TO STA. 3+78 RT

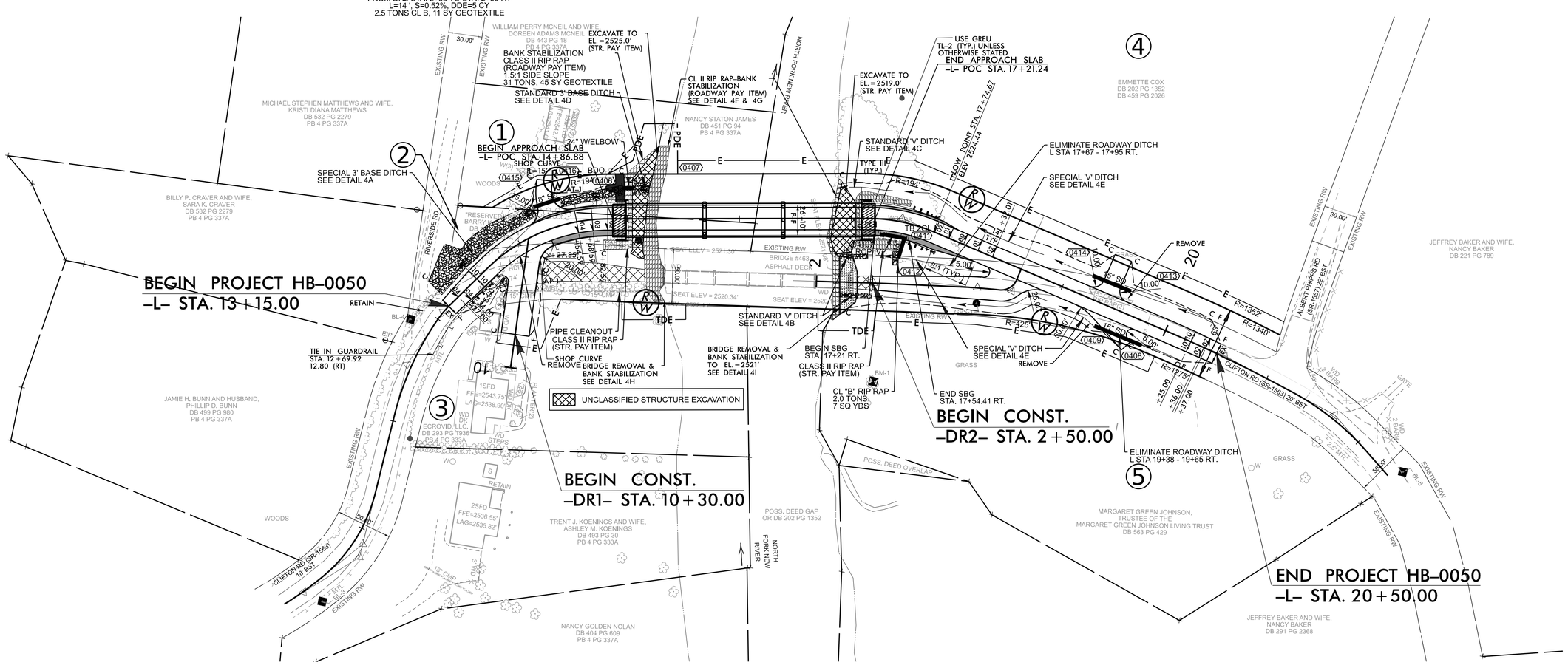

DETAIL 4F
BANK STABILIZATION
(Not to Scale)

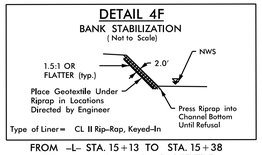

Type of Liner= CL II Rip-Rap, Keyed-In

FROM -L- STA. 15+13 TO STA. 15+38
EST. 187 TONS, 223 SY GEOTEXTILE

DETAIL 4G
BANK STABILIZATION
(Not to Scale)

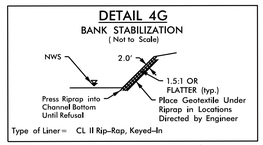

Type of Liner= CL II Rip-Rap, Keyed-In

FROM -L- STA. 16+78 TO STA. 16+90
EST. 61 TONS, 91 SY GEOTEXTILE

DETAIL 4H
BRIDGE REMOVAL & BANK STABILIZATION
@ EX. ABUTMENT 1
(Not to Scale)

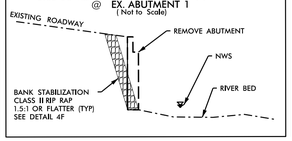

DETAIL 4I
BRIDGE REMOVAL & BANK STABILIZATION
@ EX. ABUTMENT 2
(Not to Scale)

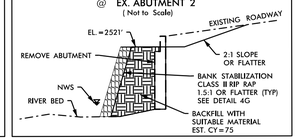

SEE PLAN VIEW FOR LIMITS

SEE SHEET 5 FOR PROFILES
SEE SHEET 2B-1 FOR GEOMETRY DETAIL

HB-0050
004

NORTH CAROLINA
DEPARTMENT OF TRANSPORTATION
ASHE COUNTY

ROADWAY DESIGN UNIT

ROADWAY DESIGN ENGINEER
NORTH CAROLINA PROFESSIONAL SEAL 043023 ENGINEER DAVID V. JANOSKO
Docusigned by: David Janosko 8/17/2026
DOCUSIGNED SIGNATURE

HYDRAULICS ENGINEER
NORTH CAROLINA PROFESSIONAL SEAL 021162 ENGINEER W. HERBERT TURNER, JR.
Docusigned by: Herb Turner 8/17/2026
DOCUSIGNED SIGNATURE

PREPARED BY
ms consultants, inc.
5444 Wade Park Blvd.
Suite 160
Raleigh, NC 27607
NC License Number : C-3230

MI ENGINEERING
1011 SCHAUB DRIVE, SUITE 100
RALEIGH, NC 27606
(919) 851-6606
FIRM PE NUMBER: F-0671

DOCUMENT NOT CONSIDERED FINAL UNLESS ALL SIGNATURES COMPLETED

REVISIONS

Docusign Envelope ID: 207FA4B0-BAE9-8A41-8208-8D2B8C488E29

11/14/23

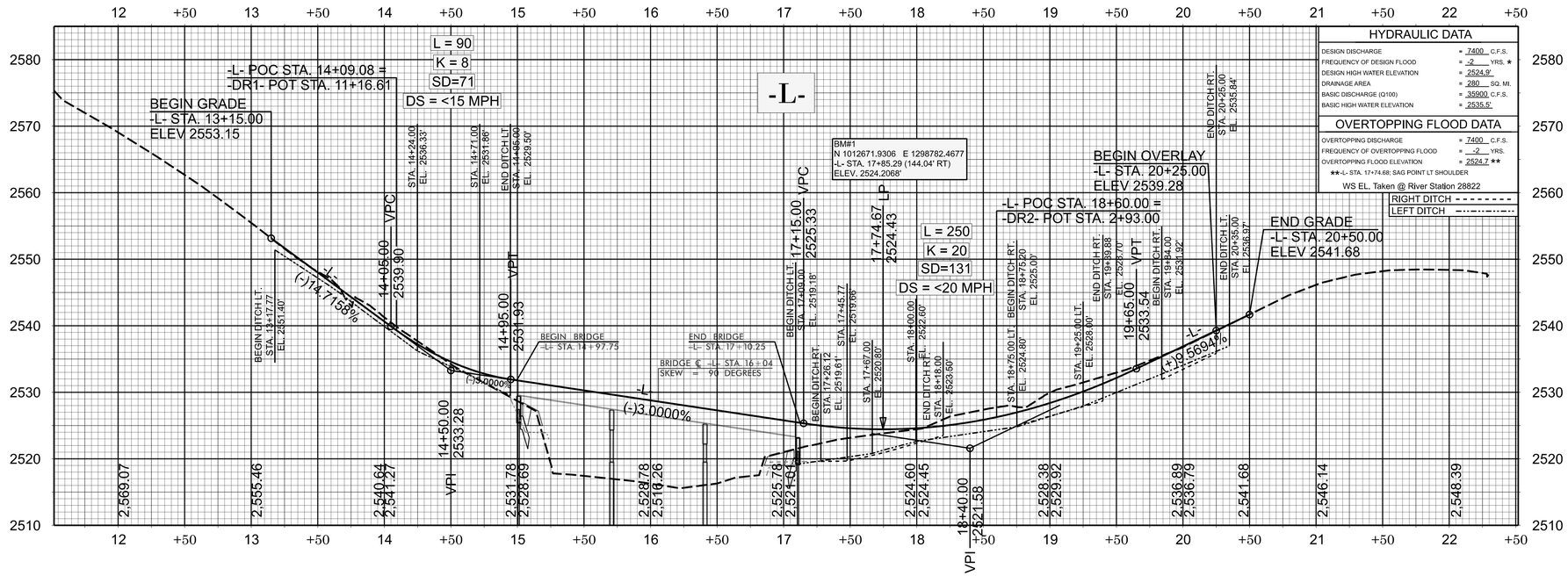

SEE SHEET 4 FOR PLAN

HYDRAULIC DATA

DESIGN DISCHARGE	= 7400	C.F.S.
FREQUENCY OF DESIGN FLOOD	= -2	YRS. *
DESIGN HIGH WATER ELEVATION	= 2524.9'	
DRAINAGE AREA	= .280	SQ. MI.
BASIC DISCHARGE (Q100)	= 35900	C.F.S.
BASIC HIGH WATER ELEVATION	= 2535.5'	

OVERTOPPING FLOOD DATA

OVERTOPPING DISCHARGE	= 7400	C.F.S.
FREQUENCY OF OVERTOPPING FLOOD	= -2	YRS.
OVERTOPPING FLOOD ELEVATION	= 2524.7	**

**-L- STA. 17+74.68; SAG POINT LT SHOULDER

WS EL. Taken @ River Station 28822

RIGHT DITCH - - - - - - - -

LEFT DITCH -·-·-·-·-·-·-

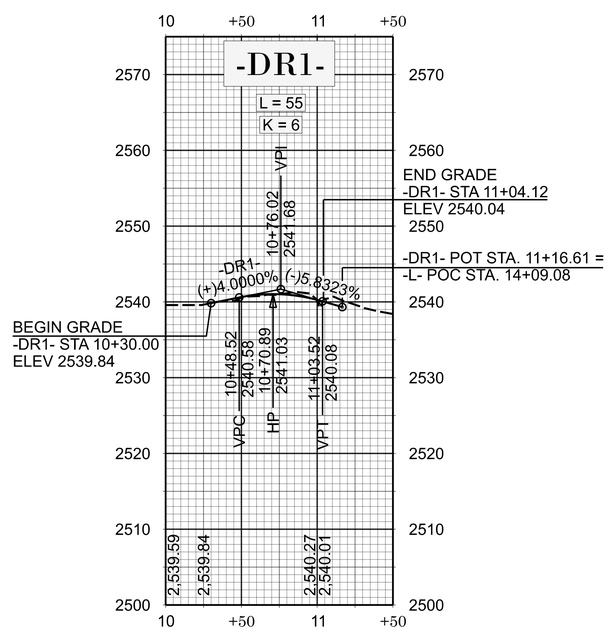

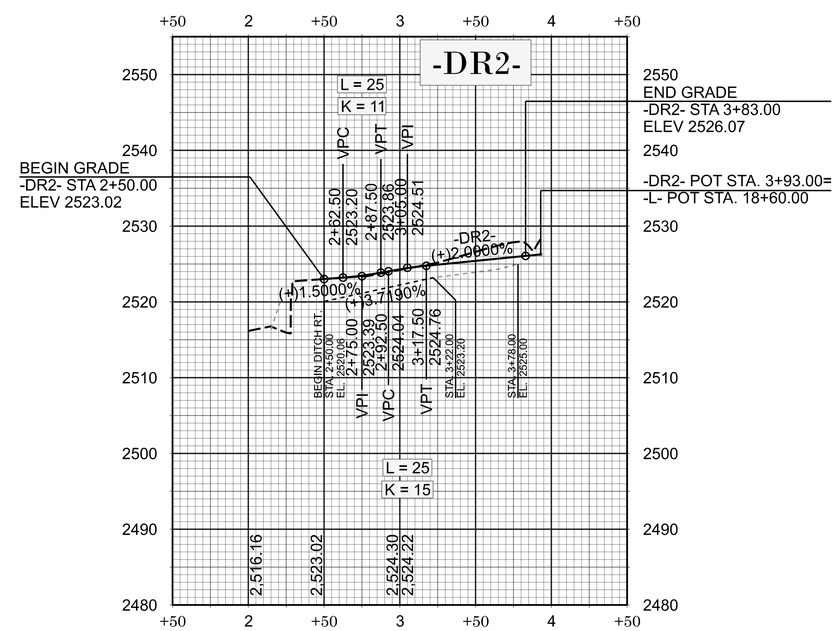

SEE SHEET 4 FOR PLAN

HB-0050

005

NORTH CAROLINA
DEPARTMENT OF TRANSPORTATION
ASHE COUNTY

ROADWAY DESIGN UNIT

ROADWAY DESIGN ENGINEER

NORTH CAROLINA PROFESSIONAL SEAL 043023 ENGINEER DAVID V. JANOSKO

DocuSigned by: David Janosko 7/20/2026

HYDRAULICS ENGINEER

NORTH CAROLINA PROFESSIONAL SEAL 021162 ENGINEER W. HERBERT TURNER, JR.

DocuSigned by: Herb Turner 7/20/2026

PREPARED BY

ms consultants, inc.
5444 Wade Park Blvd.
Suite 160
Raleigh, NC 27607
NC License Number : C-3230

MI ENGINEERING
1011 SCHAUB DRIVE, SUITE 100
RALEIGH, NC 27606
(919) 851-6606
FIRM PE NUMBER: P-0671

DOCUMENT NOT CONSIDERED FINAL UNLESS ALL SIGNATURES COMPLETED

REVISIONS

09/08/99

TIP PROJECT: HB-0050

STATE	STATE PROJECT REFERENCE NO.	SHEET NO.	TOTAL SHEETS
N.C.	HB-0050	RW01	6

STATE OF NORTH CAROLINA
DIVISION OF HIGHWAYS

SURVEY CONTROL, EXISTING CENTERLINES, RIGHT OF WAY, EASEMENTS AND PROPERTY TIES

ASHE COUNTY

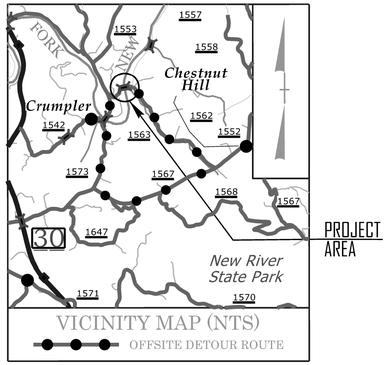

NAD 83/ 2011

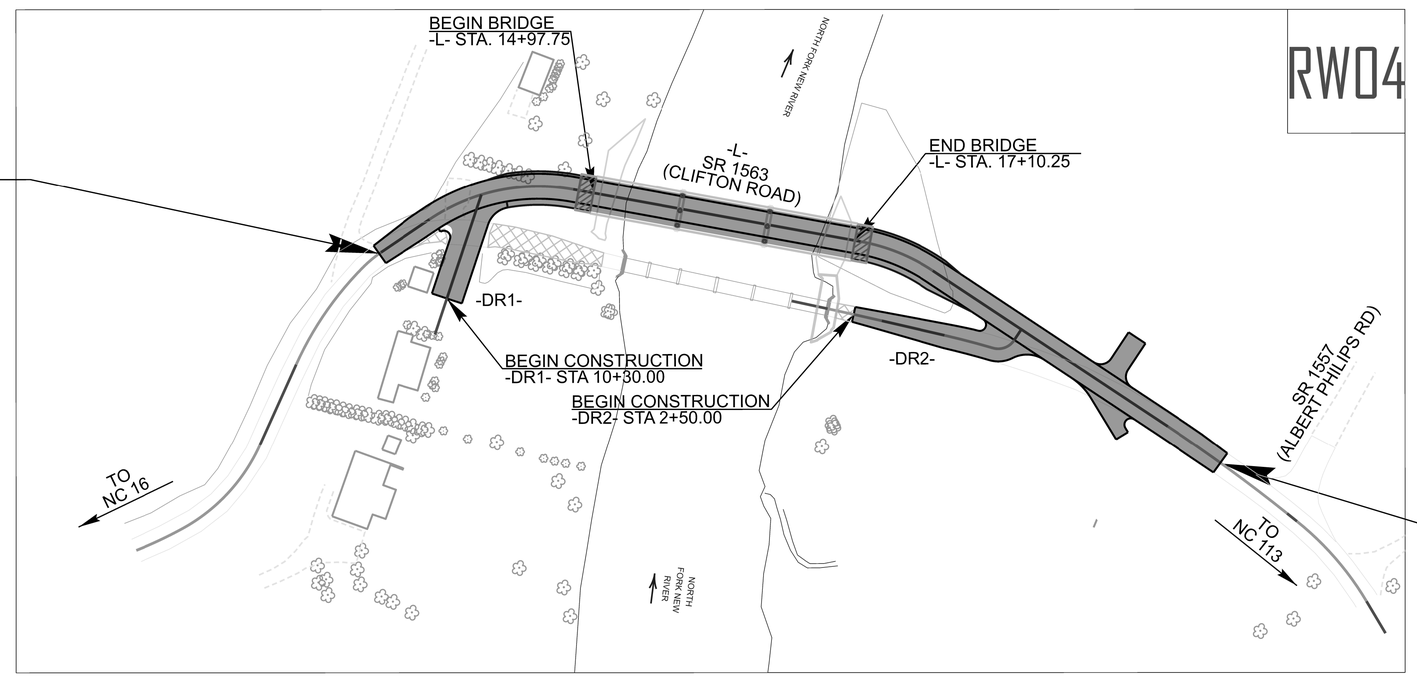

DOCUMENT NOT CONSIDERED FINAL UNLESS ALL SIGNATURES COMPLETED

GRAPHIC SCALES

60' 30' 0' 60' 120'

DATUM DESCRIPTION

THE LOCALIZED COORDINATE SYSTEM DEVELOPED FOR THIS PROJECT IS BASED ON THE STATE PLANE COORDINATES ESTABLISHED BY NCDOT FOR MONUMENT HB-0050-1
WITH NAD83/2011 STATE PLANE GRID COORDINATES OF
NORTHING: 1012761.080 EASTING: 1298856.083
ELEVATION: 2526.12
THE AVERAGE COMBINED GRID FACTOR USED ON THIS PROJECT (GROUND TO GRID) IS: 0.99999777
ALL LINEAR DIMENSIONS ARE LOCALIZED HORIZONTAL DISTANCES
VERTICAL DATUM USED IS NAVD 88

Prepared in the Office of:

wsp

GEOSPHERE LAND SURVEYING OF NC
128 TALBERT ROAD
MOORESVILLE NC 28117
FIRM C-5241

2024 STANDARD SPECIFICATIONS

RIGHT OF WAY DATE: 8/15/2025

LETTING DATE: 9/17/2026

PROFESSIONAL LAND SURVEYOR

NORTH CAROLINA PROFESSIONAL SEAL L-5617 LAND SURVEYOR SARAH J. VINCENT

SIGNATURE: *DATE:* 9/16/2025

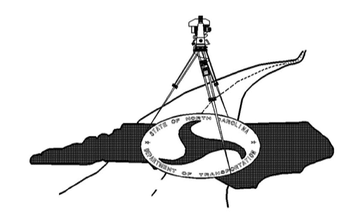

5/26/20

PRIMARY SURVEY CONTROL SHEET

I, Christopher K, Drye, PLS, certify that the Project Control was verified by NV5 Engineers and Consultants, Inc. The actual GPS survey was performed by NCDOT and the following information was used to perform the survey:

Class of survey: AA
Type of GPS field procedure: RTN
Dates of survey: 04/19/2022
Datum/Epoch: NAD83/2011
Published/Fixed-control use: N/A
Localized around: HB0050-1
Northing: 1012761.080
Easting: 1298856.083
Combined grid factor:0.99999777
Geoid model: GEOID 18
Units: US Survey Feet

This day 3/14/2024.

DocuSigned by:
E4E4B1C69CEC4D3...

Professional Land Surveyor L-5456

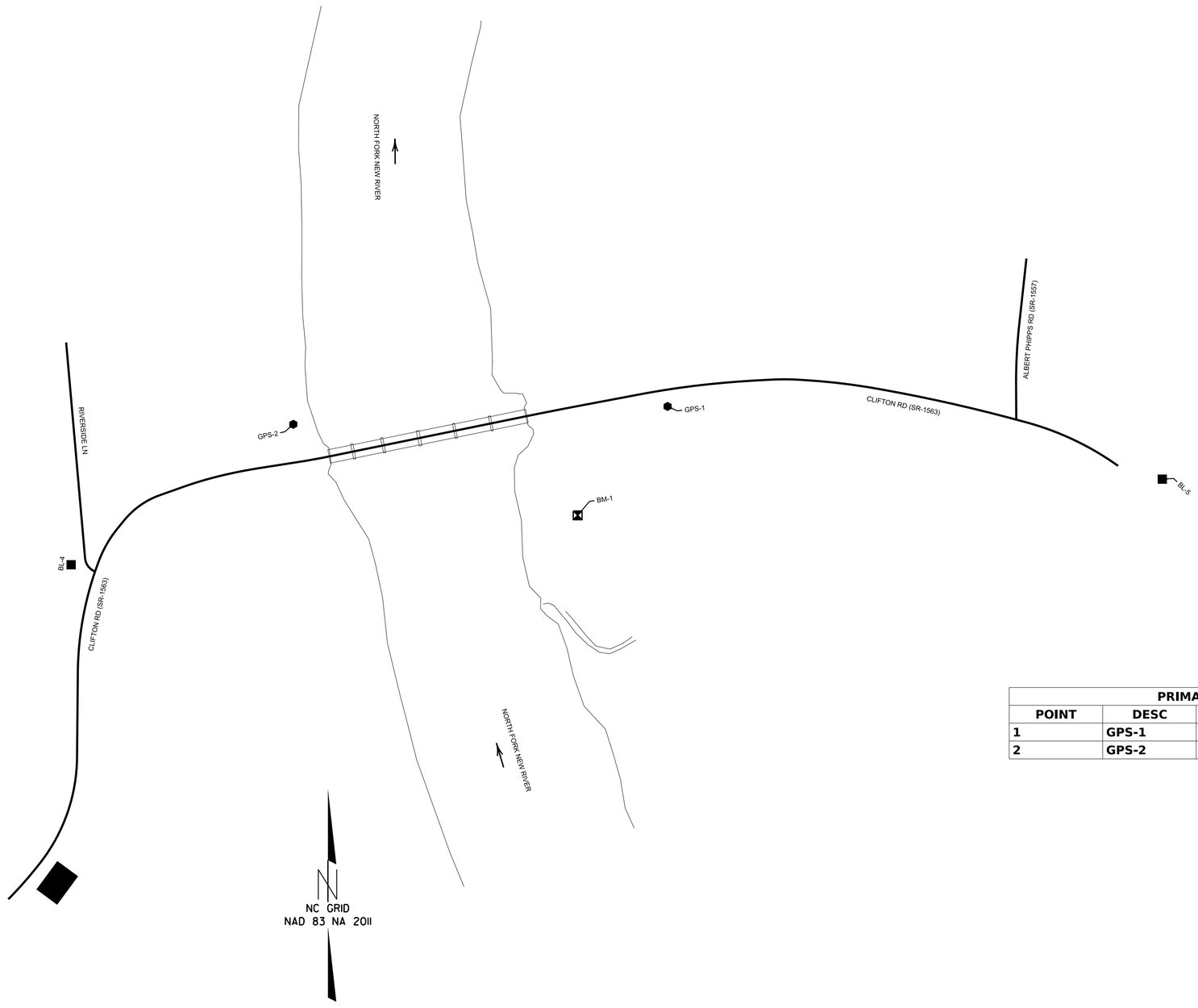

PRIMARY CONTROL TABLE				
POINT	DESC	NORTH	EAST	ELEVATION
1	GPS-1	1012761.080	1298856.083	2526.120
2	GPS-2	1012746.461	1298549.688	2527.480

50' 25' 0 50' 100'
1" = 50'

NOTES:

1. THE SURVEY CONTROL DATA FOR THIS PROJECT HAS BEEN COMPILED FROM VARIOUS SOURCES. IF FURTHER INFORMATION REGARDING PROJECT CONTROL IS NEEDED, PLEASE CONTACT THE LOCATION AND SURVEYS UNIT.

HB-0050
R/W 02C-1

NORTH CAROLINA DEPARTMENT OF TRANSPORTATION

STATE OF NORTH CAROLINA DEPARTMENT OF TRANSPORTATION

PROFESSIONAL LAND SURVEYOR

NORTH CAROLINA PROFESSIONAL SEAL L-5456 LAND SURVEYOR CHRISTOPHER K. DRYE
3/14/2024

DOCUMENT NOT CONSIDERED FINAL UNLESS ALL SIGNATURES ARE COMPLETED

2018 STANDARD SPECIFICATIONS

TIP PROJECT: HB-0050
County: Ashe

PREPARED FOR

LOCATION AND SURVEYS UNIT

PREPARED BY

PREPARED BY:
NV5
8514 MCALPINE PARK DRIVE, SUITE 135
CHARLOTTE, NC 28211
phone: 704.537.7300 NV5.com
NC License # F-1333

SECONDARY SURVEY CONTROL SHEET

W/ EXISTING CENTERLINE ALIGNMENTS PRIOR TO CONSTRUCTION

I, Christopher K. Drye, PLS, certify that the Secondary Baseline Control for this project was completed under my direct and responsible charge from an actual survey made under my supervision; that all horizontal closures had a minimum ratio of precision of 1:20,000 (Class AA) and Vertical accuracy to 1:10,000 (Class A). Field work was performed from 01/02/2024 to 02/15/2024 , and all coordinates are based on NAD 83/2011 and all elevations are based on NAVD 88; that this survey was performed to meet the requirements of 21NCAC 56.1600 as applicable.

This day 3/14/2024.

DocuSigned by:

E4E4B1C69CEC4D3...

Professional Land Surveyor L-5456

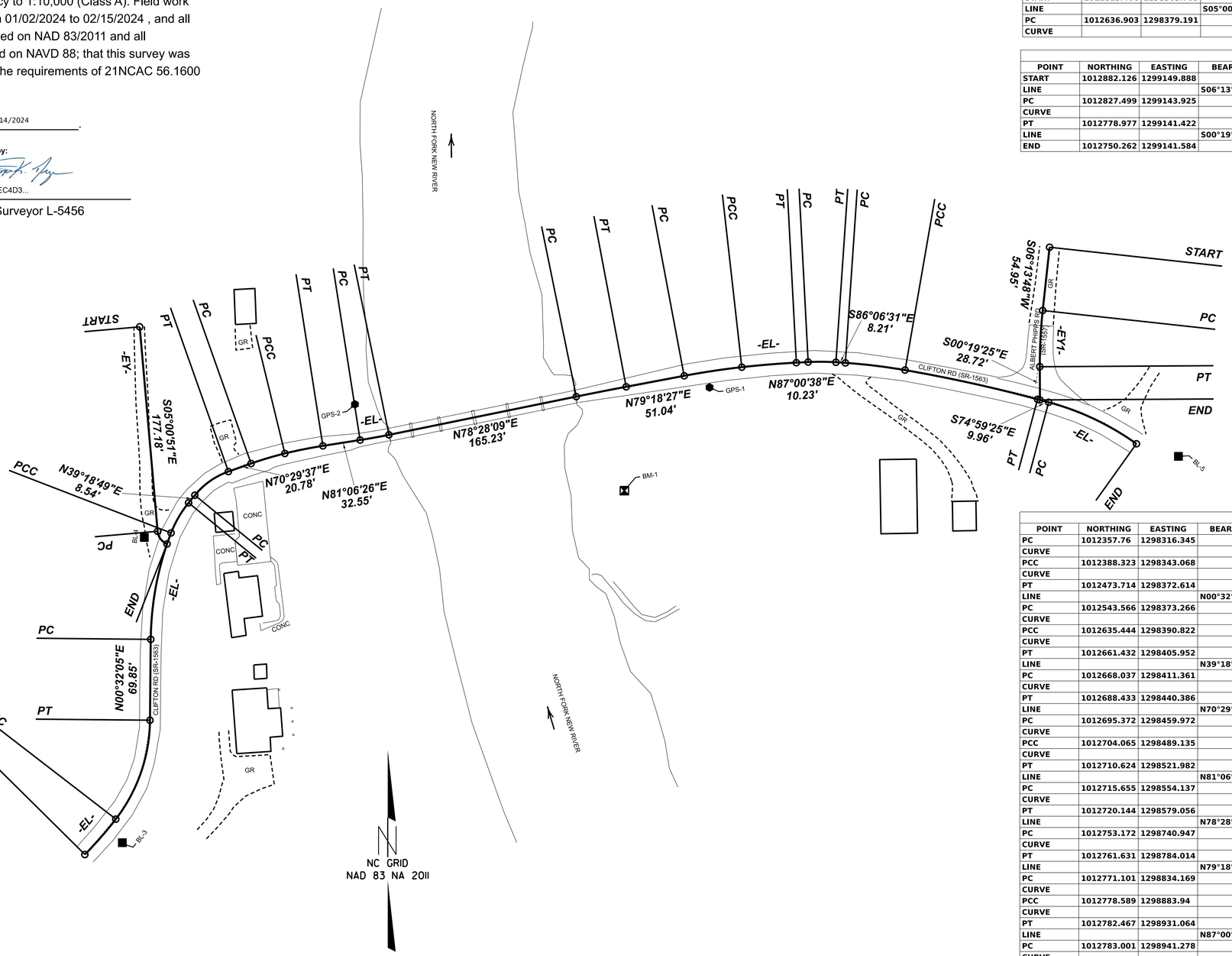

EXISTING ALIGNMENT NAME:EY									
POINT	NORTHING	EASTING	BEARING	DIST	DELTA	D	L	T	R
START	1012813.406	1298363.705							
LINE			S05°00'51""E	177.181					
PC	1012636.903	1298379.191							
CURVE					63.437°" Left	80.737°"	14.393	8.035	13

EXISTING ALIGNMENT NAME:EY1									
POINT	NORTHING	EASTING	BEARING	DIST	DELTA	D	L	T	R
START	1012882.126	1299149.888							
LINE			S06°13'48""W	54.951					
PC	1012827.499	1299143.925							
CURVE					6.554°" Left	13.481°"	48.613	24.333	425
PT	1012778.977	1299141.422							
LINE			S00°19'25""E	28.715					
END	1012750.262	1299141.584							

BASELINE POINTS TABLE				
POINT	DESC	NORTH	EAST	ELEVATION
1	GPS-1	1012761.080	1298856.083	2526.120
2	GPS-2	1012746.461	1298549.688	2527.480
3	BL-3	1012367.873	1298348.764	2585.580
4	BL-4	1012631.399	1298367.729	2557.160
5	BL-5	1012701.590	1299261.140	2548.020

BENCHMARK TABLE				
BENCHMARK	NORTHING	EASTING	ELEVATION	DESCRIPTION
BM-1	1012671.931	1298782.468	2524.230	RRSPK IN TWIN BLACKBERRY

EXISTING ALIGNMENT NAME:EL									
POINT	NORTHING	EASTING	BEARING	DIST	DELTA	D	L	T	R
PC	1012357.76	1298316.345							
CURVE					7.053°" Left	17.362°"	40.624	20.338	330
PCC	1012388.323	1298343.068							
CURVE					37.104°" Left	40.349°"	91.957	47.656	142
PT	1012473.714	1298372.614							
LINE			N00°32'05""E	69.854					
PC	1012543.566	1298373.266							
CURVE					20.566°" Right	21.869°"	94.045	47.534	262
PCC	1012635.444	1298390.822							
CURVE					18.213°" Right	60.311°"	30.198	15.227	95
PT	1012661.432	1298405.952							
LINE			N39°18'49""E	8.537					
PC	1012668.037	1298411.361							
CURVE					31.180°" Right	86.812°"	35.917	18.415	66
PT	1012688.433	1298440.386							
LINE			N70°29'37""E	20.779					
PC	1012695.372	1298459.972							
CURVE					5.814°" Right	19.099°"	30.444	15.235	300
PCC	1012704.065	1298489.135							
CURVE					4.799°" Right	14.324°"	33.505	16.763	400
PT	1012710.624	1298521.982							
LINE			N81°06'26""E	32.546					
PC	1012715.655	1298554.137							
CURVE					2.638°" Left	10.417°"	25.323	12.664	550
PT	1012720.144	1298579.056							
LINE			N78°28'09""E	165.225					
PC	1012753.172	1298740.947							
CURVE					0.838°" Right	1.910°"	43.891	21.946	3000
PT	1012761.631	1298784.014							
LINE			N79°18'27""E	51.04					
PC	1012771.101	1298834.169							
CURVE					4.273°" Right	8.488°"	50.343	25.183	675
PCC	1012778.589	1298883.94							
CURVE					3.430°" Right	7.253°"	47.291	23.652	790
PT	1012782.467	1298931.064							
LINE			N87°00'38""E	10.228					
PC	1012783.001	1298941.278							
CURVE					6.881°" Right	28.648°"	24.019	12.024	200
PT	1012782.812	1298965.282							
LINE			S86°06'31""E	8.214					
PC	1012782.254	1298973.478							
CURVE					5.950°" Right	11.459°"	51.927	25.987	500
PCC	1012776.049	1299025.009							
CURVE					5.168°" Right	4.407°"	117.253	58.666	1300
PT	1012750.827	1299139.477							
LINE			S74°59'25""E	9.964					
PC	1012748.247	1299149.101							
CURVE					20.555°" Right	24.381°"	84.307	42.612	235

50' 25' 0 50' 100'

1" = 50'

NOTES:

1. THE SURVEY CONTROL DATA FOR THIS PROJECT HAS BEEN COMPILED FROM VARIOUS SOURCES. IF FURTHER INFORMATION REGARDING PROJECT CONTROL IS NEEDED, PLEASE CONTACT THE LOCATION AND SURVEYS UNIT.

HB-0050

R/W | 02C-1

NORTH CAROLINA DEPARTMENT OF TRANSPORTATION

PROFESSIONAL LAND SURVEYOR

NORTH CAROLINA PROFESSIONAL SEAL L-5456 LAND SURVEYOR CHRISTOPHER K. DRYE 03/14/2024

DOCUMENT NOT CONSIDERED FINAL UNLESS ALL SIGNATURES ARE COMPLETED

2018 STANDARD SPECIFICATIONS

TIP PROJECT: HB-0050

County: Ashe

PREPARED FOR

LOCATION AND SURVEYS UNIT

PREPARED BY

PREPARED BY:

NV5

8514 MCALPINE PARK DRIVE, SUITE 135
CHARLOTTE, NC 28211
phone: 704.537.7300 NV5.com

NC License # F-1333

5/26/20

Docusign Envelope ID: AA597E83-0428-43CC-90E3-E643DCAA66B4

5/26/20

PROPOSED ALIGNMENT CONTROL SHEET

I, Sarah J. Vincent, PLS, CERTIFY THAT THE DATA COMPILED CAME FROM AVAILABLE SURVEYS/MAPPING PERFORMED BY OTHERS AND PROVIDED TO ME BY NCDOT AND DO NOT CERTIFY TO THE ACCURACY OR QUALITY OF THE INDIVIDUAL DATA SOURCES.

THIS 11TH DAY OF SEPTEMBER, 2025.

DocuSigned by:
Sarah Vincent
-B6D5417BBA5848A...

PROFESSIONAL LAND SURVEYOR L-5617

PROPOSED ALIGNMENT: L

POINT	STATION	NORTHING	EASTING	BEARING	DIST	DELTA	D	L	T	R	LT	ST
PC	10+01.88	1012357.7602	1298316.3447	N41°09'54.0"E	40.60	07°03'11.8"	17°21'44.5"	40.62	20.34	330.00		
PCC	10+42.50	1012388.3234	1298343.0677	N19°05'11.3"E	90.36	37°06'13.5"	40°20'56.9"	91.96	47.66	142.00		
PT	11+34.46	1012473.7144	1298372.6145	N00°32'04.6"E	69.85							
PC	12+04.31	1012543.5658	1298373.2662	N10°49'03.9"E	93.54	20°33'58.7"	21°52'07.0"	94.04	47.53	262.00		
PCC	12+98.36	1012635.4442	1298390.8225	N26°41'08.6"E	18.49	11°10'10.8"	60°18'40.8"	18.52	9.29	95.00		
PT	13+16.88	1012651.9653	1298399.1266	N32°16'14.0"E	46.47							
PC	13+63.35	1012691.2575	1298423.9378	N54°27'10.7"E	116.29	44°21'53.4"	37°12'18.2"	119.24	62.79	154.00		
PT	14+82.59	1012758.8636	1298518.5537	N76°38'07.4"E	231.04							
PC	17+13.63	1012812.2677	1298743.3365	N88°14'19.1"E	61.95	23°12'23.3"	37°12'18.2"	62.37	31.62	154.00		
PT	17+76.01	1012814.1719	1298805.2563	S80°09'29.3"E	223.04							
PC	19+99.04	1012776.0486	1299025.0091	S77°34'26.3"E	117.23	05°10'06.0"	04°24'26.5"	117.27	58.67	1300.00		
PT	21+16.31	1012750.8240	1299139.4889	S74°59'23.3"E	9.95							
PC	21+26.26	1012748.2466	1299149.1012	S64°42'46.3"E	83.86	20°33'13.9"	24°22'47.1"	84.31	42.61	235.01		
PT	22+10.57	1012712.4272	1299224.9218	S54°26'09.4"E	29.39							
END	22+39.95	1012695.3345	1299248.8284									

PROPOSED ALIGNMENT: DR1

POINT	STATION	NORTHING	EASTING	BEARING	DIST	DELTA	D	L	T	R	LT	ST
START	10+00.00	1012609.6494	1298464.4922	N05°18'41.7"W	116.61							
END	11+16.61	1012725.7610	1298453.6972									

PROPOSED ALIGNMENT: DR2

POINT	STATION	NORTHING	EASTING	BEARING	DIST	DELTA	D	L	T	R	LT	ST
START	2+00.00	1012747.3845	1298712.5774	N78°28'08.9"E	28.95							
PC	2+28.95	1012753.1723	1298740.9470	N78°53'17.7"E	43.89	00°50'17.7"	01°54'35.5"	43.89	21.95	3000.00		
PT	2+72.84	1012761.6310	1298784.0145	N79°18'26.6"E	51.04							
PC	3+23.88	1012771.1010	1298834.1686	N80°59'33.0"E	39.70	03°22'12.9"	08°29'17.7"	39.70	19.86	675.00		
PRC	3+63.59	1012777.3165	1298873.3780	N46°15'35.1"E	17.81	72°50'08.7"	21°58'18.7"	19.07	11.07	15.00		
PT	3+82.66	1012789.6302	1298886.2455	N09°50'30.7"E	10.34							
END	3+93.00	1012799.8151	1298888.0124									

NOTES:

1. THE PROPOSED ALIGNMENT CONTROL DATA FOR THIS PROJECT HAS BEEN COMPILED FROM VARIOUS SOURCES. IF FURTHER INFORMATION REGARDING PROJECT CONTROL IS NEEDED, PLEASE CONTACT THE LOCATION AND SURVEYS UNIT.

HB-0050
R/W 020-1

NORTH CAROLINA DEPARTMENT OF TRANSPORTATION

PROFESSIONAL LAND SURVEYOR

NORTH CAROLINA PROFESSIONAL SEAL L-5617 LAND SURVEYOR SARAH J. VINCENT

DOCUMENT NOT CONSIDERED FINAL UNLESS ALL SIGNATURES ARE COMPLETED

2024 STANDARD SPECIFICATIONS

TIP PROJECT: HB-0050
County: Ashe

PREPARED FOR

LOCATION AND SURVEYS UNIT

PREPARED BY

wsp

GEOSPHERE LAND SURVEYING OF NC
129 TALBERT ROAD
MOORESVILLE NC 28117
FIRM C-5241

Docusign Envelope ID: AA597E83-0428-43CC-90E3-E643DCAA66B4

5/26/20

RIGHT OF WAY CONTROL SHEET

I , Sarah J. Vincent , PLS, CERTIFY THAT THE RIGHT OF WAY AND PERMANENT EASEMENT MONUMENTATION FOR THIS PROJECT SHOWN HEREIN WAS COMPLETED UNDER MY DIRECT AND RESPONSIBLE CHARGE FROM AN ACTUAL SURVEY MADE UNDER MY SUPERVISION; THAT ALL HORIZONTAL CLOSURES HAD A MINIMUM RATIO OF PRECISION OF 1:10,000 (CLASS A). FIELD WORK WAS PERFORMED FROM 9/9/2025 TO 9/10/2025, AND ALL COORDINATES ARE BASED ON NAD83/NA 2011; THAT THIS SURVEY WAS PERFORMED TO MEET THE REQUIREMENTS OF 21NCAC 56.1600 AS APPLICABLE.

THIS 11TH DAY OF SEPTEMBER, 2025.

DocuSigned by:
Sarah Vincent
B6D5417BBA5848A...

PROFESSIONAL LAND SURVEYOR L-5617

PERMANENT ROW MARKER IRON PIN AND CAP:L				
STATION	OFFSET	NORTH	EAST	
13+78.05	-59.62	1012739.7945	1298385.2214	POINT FALLS IN TREE STUMP
13+91.06	-45.00	1012743.6828	1298407.6214	
14+09.87	61.39	1012679.5422	1298494.1021	
14+82.48	-45.00	1012802.6106	1298508.0061	
14+82.48	-52.00	1012809.4210	1298506.3881	
17+13.63	-52.00	1012862.8592	1298731.3169	IN ROCK- POINT SET AS 60P NAIL
17+76.01	-52.00	1012865.4052	1298814.1444	
18+37.87	53.32	1012751.0577	1298857.0990	
19+90.44	25.00	1012752.8901	1299012.2585	
19+99.04	-52.00	1012827.2833	1299033.8974	
20+50.00	25.00	1012741.9137	1299069.7991	
20+90.73	-52.00	1012807.6847	1299127.2021	

PERMANENT EASEMENT MARKER IRON PIN AND CAP:L				
STATION	OFFSET	NORTH	EAST	
14+90.00	-52.00	1012811.1679	1298513.7423	
14+90.00	-85.00	1012843.2743	1298506.1144	
15+45.00	-85.00	1012855.9873	1298559.6249	POINT NOT SET - FALLS IN RIVER
15+45.00	-52.00	1012823.8810	1298567.2528	POINT NOT SET - FALLS IN RIVER

NOTES:

1. IF FURTHER INFORMATION REGARDING PROJECT CONTROL IS NEEDED, PLEASE CONTACT THE LOCATION AND SURVEYS UNIT.

HB-0050
R/W 03E-1

NORTH CAROLINA DEPARTMENT OF TRANSPORTATION

PROFESSIONAL LAND SURVEYOR

NORTH CAROLINA PROFESSIONAL SEAL L-5617 LAND SURVEYOR SARAH J. VINCENT

DOCUMENT NOT CONSIDERED FINAL UNLESS ALL SIGNATURES ARE COMPLETED

2024 STANDARD SPECIFICATIONS

TIP PROJECT: HB-0050
County: Ashe

PREPARED FOR

LOCATION AND SURVEYS UNIT

PREPARED BY

wsp

GEOSPHERE LAND SURVEYING OF NC
128 TALBERT ROAD
MOORESVILLE NC 28117
FIRM C-5241

Docusign Envelope ID: AA597E83-0428-43CC-90E3-E643DCAA66B4

5/26/20

I , Sarah J. Vincent , PLS, CERTIFY THAT THE RIGHT OF WAY AND PERMANENT EASEMENT MONUMENTATION FOR THIS PROJECT SHOWN HEREIN WAS COMPLETED UNDER MY DIRECT AND RESPONSIBLE CHARGE FROM AN ACTUAL SURVEY MADE UNDER MY SUPERVISION; THAT ALL HORIZONTAL CLOSURES HAD A MINIMUM RATIO OF PRECISION OF 1:10,000 (CLASS A). FIELD WORK WAS PERFORMED FROM 9/9/2025 TO 9/10/2025, AND ALL COORDINATES ARE BASED ON NAD83/NA 2011; THAT THIS SURVEY WAS PERFORMED TO MEET THE REQUIREMENTS OF 21NCAC 56.1600 AS APPLICABLE.

THIS 11TH DAY OF SEPTEMBER, 2025.

DocuSigned by:
Sarah Vincent
8605417B8A5848A...

PROFESSIONAL LAND SURVEYOR L-5617

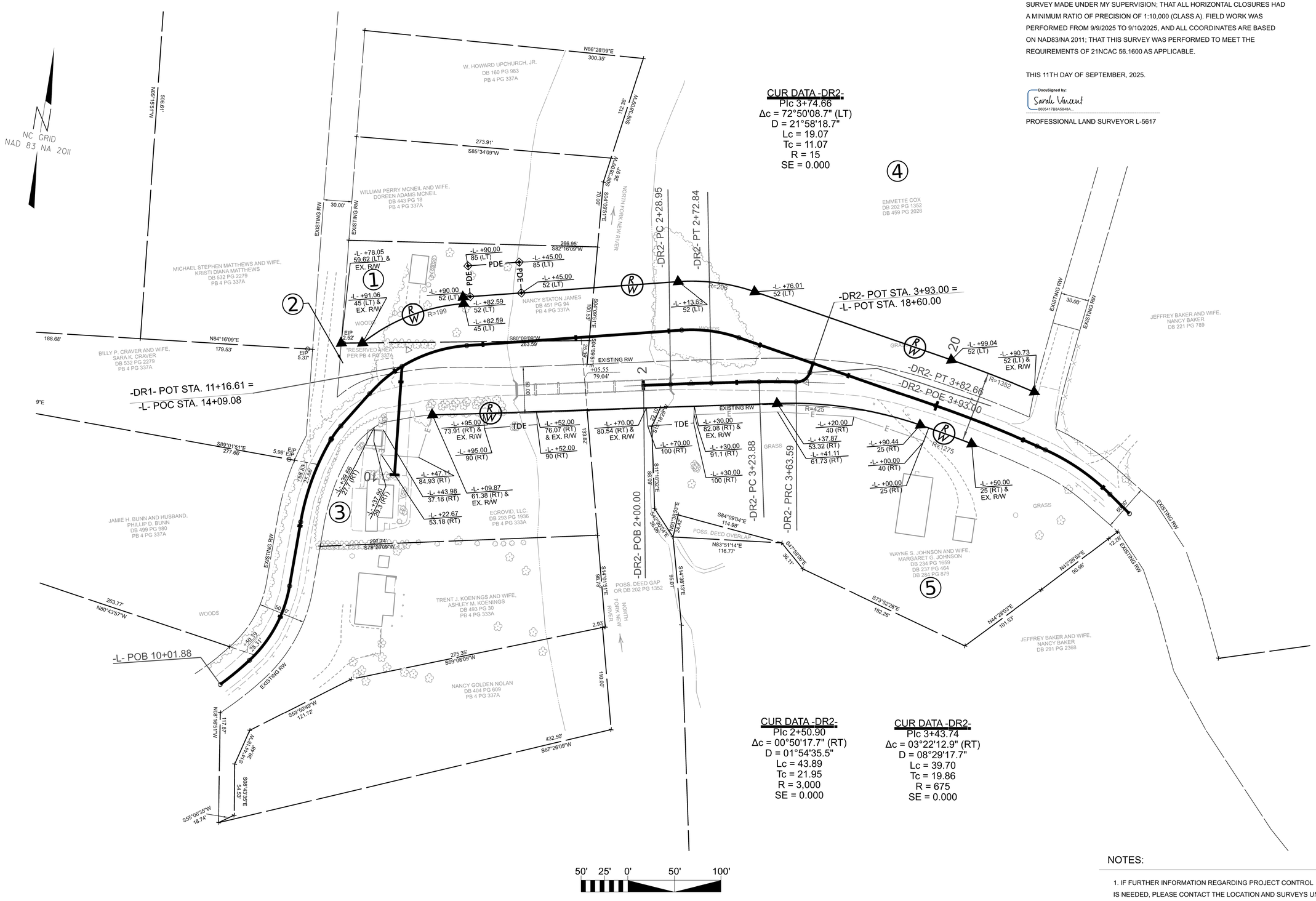

CUR DATA -DR2-
PIc 2+50.90
Δc = 00°50'17.7" (RT)
D = 01°54'35.5"
Lc = 43.89
Tc = 21.95
R = 3,000
SE = 0.000

CUR DATA -DR2-
PIc 3+43.74
Δc = 03°22'12.9" (RT)
D = 08°29'17.7"
Lc = 39.70
Tc = 19.86
R = 675
SE = 0.000

NOTES:

1. IF FURTHER INFORMATION REGARDING PROJECT CONTROL IS NEEDED, PLEASE CONTACT THE LOCATION AND SURVEYS UNIT.

HB-0050

R/W	RW04

NORTH CAROLINA DEPARTMENT OF TRANSPORTATION

PROFESSIONAL LAND SURVEYOR

NORTH CAROLINA PROFESSIONAL SEAL L-5617 LAND SURVEYOR SARAH J. VINCENT

DOCUMENT NOT CONSIDERED FINAL UNLESS ALL SIGNATURES ARE COMPLETED

2024 STANDARD SPECIFICATIONS

TIP PROJECT: HB-0050
County: Ashe

PREPARED FOR

LOCATION AND SURVEYS UNIT

PREPARED BY

wsp

GEOSPHERE LAND SURVEYING OF NC
128 TALBERT ROAD
MOORESVILLE NC 28117
FIRM C-5241

Docusign Envelope ID: 3E72E632-DBF2-8174-8081-83873C311A14

STATE OF NORTH CAROLINA
DIVISION OF HIGHWAYS

TRANSPORTATION MANAGEMENT PLAN

ASHE COUNTY

LOCATION: *REPLACE BRIDGE NO. 040463 ON SR 1563 (CLIFTON ROAD) OVER NORTH FORK NEW RIVER*

TYPE OF WORK: *GRADING, PAVING, STRUCTURE AND DRAINAGE*

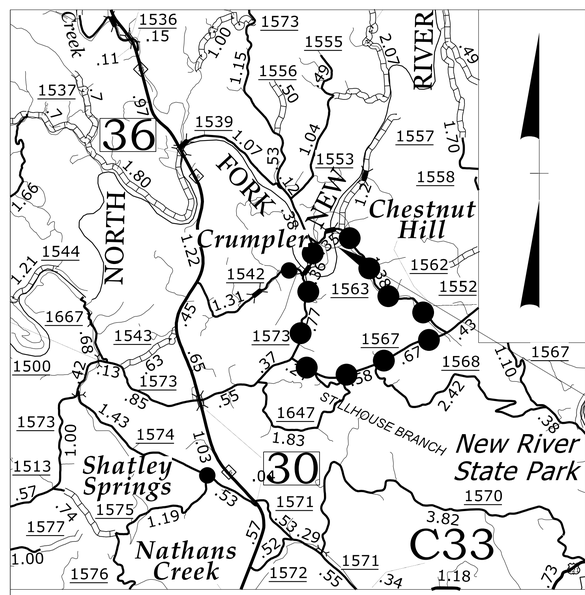

VICINITY MAP (NTS)

OFFSITE DETOUR ROUTE

INDEX OF SHEETS

SHEET NO.	TITLE
TMP-1	TITLE SHEET, VICINITY MAP, AND INDEX OF SHEETS
TMP-1A	LIST OF APPLICABLE ROADWAY STANDARD DRAWINGS, GENERAL NOTES, PHASING, AND LEGEND
TMP-2	DETOUR ROUTE AND SIGNING
TMP-3	SIGN DESIGN

SHEET NO.
TMP-1

HB-0050

TIP PROJECT:

DOCUMENT NOT CONSIDERED FINAL UNLESS ALL SIGNATURES COMPLETED

WORK ZONE SAFETY & MOBILITY
"from the MOUNTAINS to the COAST"

PLANS PREPARED BY:

DAMIAN J. GEORGE, PE

CASSIDY L. MENGELKAMP, EI

NCDOT CONTACTS:

DANIEL ADAMS, PE
PROJECT MANAGER

ms consultants, inc.
5444 Wake Park Blvd.
Suite 160
Raleigh, NC 27607
NC License Number : C-3239

DIVISION OF HIGHWAYS · STATE OF NORTH CAROLINA · DEPARTMENT OF TRANSPORTATION · WORK ZONE TRAFFIC CONTROL

APPROVED: Signed by: Damian J George 7/12/2026 94BE6122181340C...

DATE: 6-17-2026

SEAL

NORTH CAROLINA PROFESSIONAL SEAL 061679 ENGINEER DAMIAN J. GEORGE

6/18/2026
pw://ncdot-pw.bentley.com:ncdot-pw-01/Documents/Division_11/HB-0050/Work Zone Traffic Control/HB-0050-TC-TMP-Title
User:CMengelkamp

Docusign Envelope ID: 3E72E632-DBF2-8174-8081-83873C311A14

PROJ. REFERENCE NO.	SHEET NO.
HB-0050	TMP-1A

ROADWAY STANDARD DRAWINGS

THE FOLLOWING ROADWAY STANDARDS AS SHOWN IN "ROADWAY STANDARD DRAWINGS" - N.C. DEPARTMENT OF TRANSPORTATION - RALEIGH, N.C., DATED JANUARY 2024 ARE APPLICABLE TO THIS PROJECT AND BY REFERENCE HEREBY ARE CONSIDERED A PART OF THESE PLANS:

STD. NO.	TITLE
1101.01	WORK ZONE WARNING SIGNS
1101.03	TEMPORARY ROAD CLOSURES
1101.11	TRAFFIC CONTROL DESIGN STANDARDS
1110.01	STATIONARY WORK ZONE SIGNS
1130.01	DRUMS
1135.01	CONES
1145.01	BARRICADES

GENERAL NOTES

CHANGES MAY BE REQUIRED WHEN PHYSICAL DIMENSIONS IN THE DETAIL DRAWINGS, STANDARD DETAILS, AND ROADWAY DETAILS ARE NOT ATTAINABLE TO MEET FIELD CONDITIONS OR RESULT IN DUPLICATE OR UNDESIRED OVERLAPPING OF DEVICES. MODIFICATION MAY INCLUDE: MOVING, SUPPLEMENTING, COVERING, OR REMOVAL OF DEVICES AS DIRECTED BY THE ENGINEER.

THE FOLLOWING GENERAL NOTES APPLY AT ALL TIMES FOR THE DURATION OF THE CONSTRUCTION PROJECT EXCEPT WHEN OTHERWISE NOTED IN THE PLAN OR DIRECTED BY THE ENGINEER.

TRAFFIC PATTERN ALTERATIONS

A) NOTIFY THE ENGINEER THIRTY (30) CALENDAR DAYS PRIOR TO ANY TRAFFIC PATTERN ALTERATION.

SIGNING

B) INSTALL ADVANCE WORK ZONE WARNING SIGNS WHEN WORK IS WITHIN 40 FT FROM THE EDGE OF TRAVEL LANE AND NO MORE THAN THREE (3) DAYS PRIOR TO THE BEGINNING OF CONSTRUCTION.

C) PROVIDE SIGNING AND DEVICES REQUIRED TO CLOSE THE ROAD ACCORDING TO THE ROADWAY STANDARD DRAWINGS AND TRAFFIC CONTROL PLANS.

PROVIDE SIGNING REQUIRED FOR THE OFF-SITE DETOUR ROUTE AS SHOWN IN THE TRAFFIC CONTROL PLANS.

D) COVER OR REMOVE ALL SIGNS AND DEVICES REQUIRED TO CLOSE THE ROAD WHEN ROAD CLOSURE IS NOT IN OPERATION.

COVER OR REMOVE ALL SIGNS REQUIRED FOR THE OFF-SITE DETOUR WHEN THE DETOUR IS NOT IN OPERATION.

E) ENSURE ALL NECESSARY SIGNING IS IN PLACE PRIOR TO ALTERING ANY TRAFFIC PATTERN.

TRAFFIC CONTROL DEVICES

F) PLACE TYPE III BARRICADES, WITH "ROAD CLOSED" SIGN R11-2 ATTACHED, OF SUFFICIENT LENGTH TO CLOSE ENTIRE ROADWAY.

LEGEND

GENERAL

WORK AREA

REMOVAL

TRAFFIC CONTROL DEVICES

BARRICADE (TYPE III)

CONE

DRUM SKINNY DRUM TUBULAR MARKER

TEMPORARY SIGNING

PORTABLE SIGN

STATIONARY SIGN

STATIONARY OR PORTABLE SIGN

PHASING

STEP 1 - INSTALL ADVANCE WARNING SIGNS ACCORDING TO ROADWAY STANDARD DRAWING 1101.01 (SHEET 3 OF 3).

STEP 2 - INSTALL DETOUR SIGNS AS SHOWN ON TMP-2, AND COVER.

STEP 3 - USING ROADWAY STANDARD DRAWING 1101.03 (SHEETS 1 AND 2 OF 9) , INSTALL TYPE III BARRICADES AS SHOWN ON TMP-2, UNCOVER DETOUR SIGNS, AND CLOSE ROAD -L- TO THROUGH TRAFFIC.

STEP 4 - CONSTRUCT BRIDGE, APPROACHES, -DR1-, AND DRIVEWAY TIE-INS (AS NEEDED). MAINTAIN ACCESS TO RIVERSIDE LANE AND EXISTING RESIDENCE. USE PART WIDTH CONSTRUCTION ON -L- UPTO -DR1- TIE-IN. COORDINATE WITH PROPERTY OWNERS TO USE PART WIDTH CONSTRUCTION FOR -DR1- AND DRIVEWAY TIE-IN CONSTRUCTION AND CURING TIMES.

STEP 5 - INSTALL PERMANENT PAVEMENT MARKINGS AND MARKERS.

STEP 6 - OPEN ROAD -L- TO TRAFFIC, AND REMOVE DETOUR SIGNS.

ms consultants, inc.
5444 Wake Park Blvd.
Suite 160
Raleigh, NC 27607
NC License Number : C-3239

APPROVED: Signed by: Damian J George 048B61201813400... 7/12/2026

DATE: 6-17-2026

SEAL

NORTH CAROLINA PROFESSIONAL SEAL 061679 ENGINEER DAMIAN J. GEORGE

DOCUMENT NOT CONSIDERED FINAL UNLESS ALL SIGNATURES COMPLETED

DIVISION OF HIGHWAYS · STATE OF NORTH CAROLINA · DEPARTMENT OF TRANSPORTATION · WORK ZONE TRAFFIC CONTROL

ROADWAY STANDARD DRAWINGS, LEGEND, GENERAL NOTES, & PHASING

6/18/2026
pw://ncdot-pw.bentley.com:ncdot-pw-01/Documents/Division_11/HB-0050/Work Zone Traffic Control/HB-0050-TC-TMP-Title_lg
User:Mengelkamp

Docusign Envelope ID: 3E72E632-DBF2-8174-8081-83873C311A14

PROJ. REFERENCE NO.	SHEET NO.
HB-0050	TMP-2

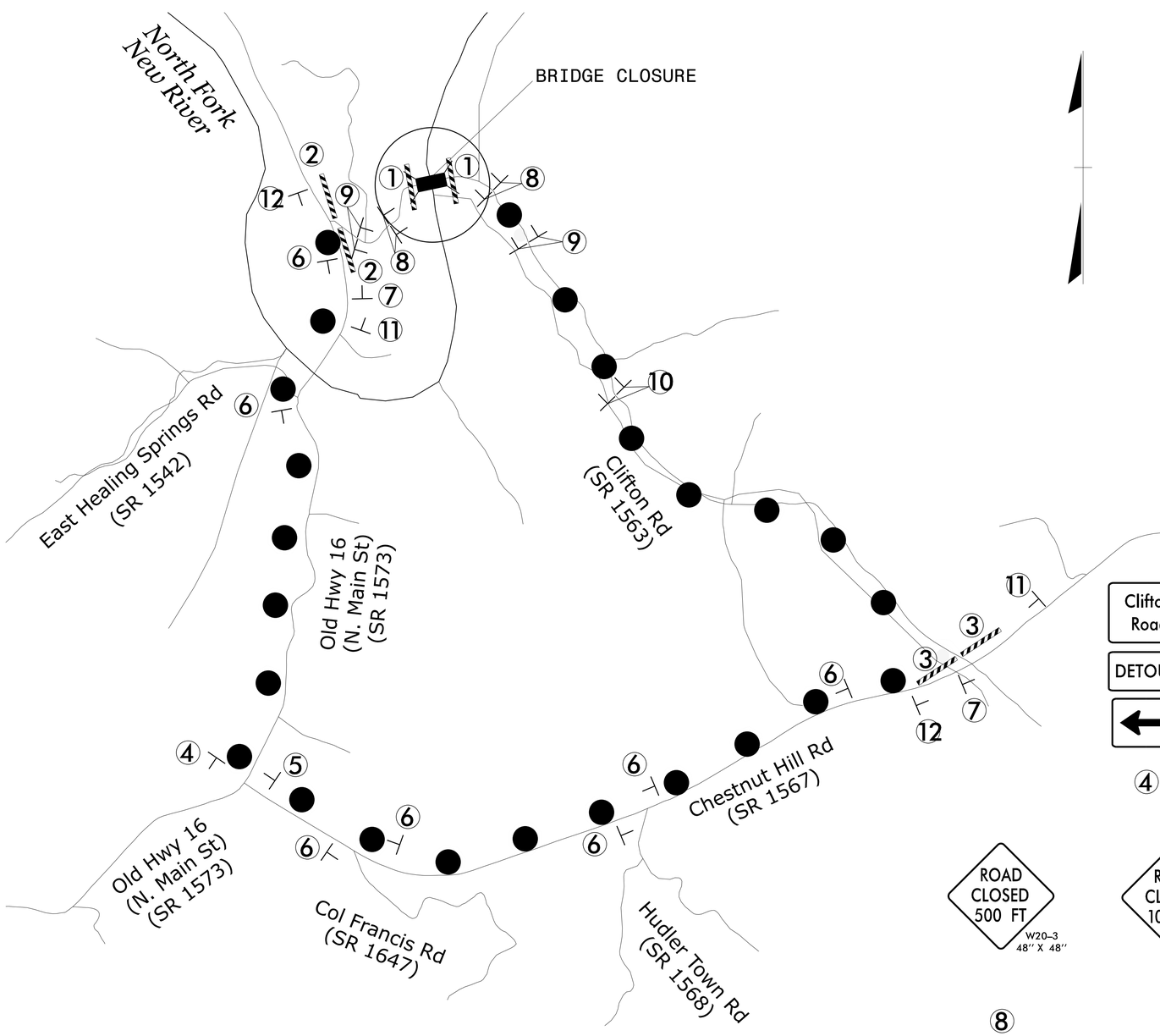

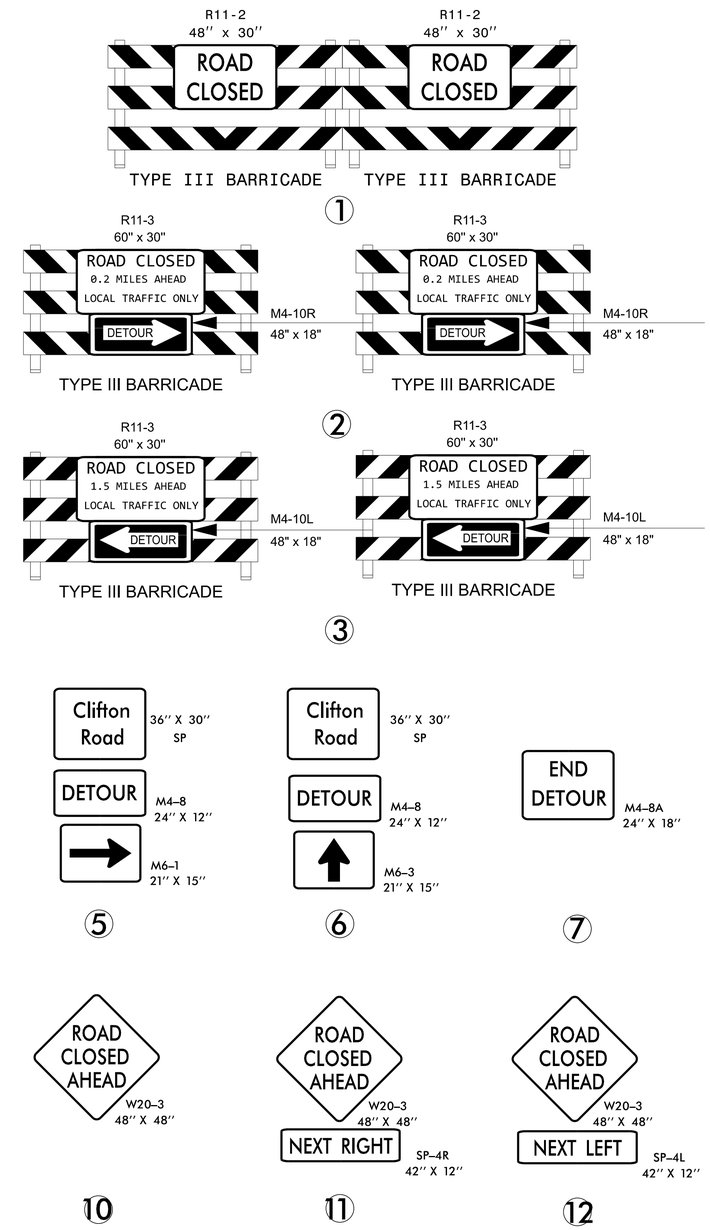

NOT TO SCALE

DETOUR ROUTE

ms consultants, inc.
5444 Wake Park Blvd.
Suite 160
Raleigh, NC 27607
NC License Number : C-3239

APPROVED: Damian J. George 7/12/2026
DATE: 6-17-2026
SEAL

NORTH CAROLINA PROFESSIONAL SEAL 061679 ENGINEER DAMIAN J. GEORGE

DOCUMENT NOT CONSIDERED FINAL UNLESS ALL SIGNATURES COMPLETED

DIVISION OF HIGHWAYS · STATE OF NORTH CAROLINA · DEPARTMENT OF TRANSPORTATION · WORK ZONE TRAFFIC CONTROL

DETOUR ROUTE AND SIGNS

6/18/2026
pw://ncdot-pw.bentley.com:ncdot-pw-01/Documents/Division_11/HB-0050/Work Zone Traffic Control/HB-0050-TC-TMP-2
User:CWengelkamp

Docusign Envelope ID: 3E72E632-DBF2-8174-8081-83873C311A14

PROJ. REFERENCE NO.	SHEET NO.
HB-0050	TMP-3

SIGN NUMBER: SP
TYPE: STATIONARY
QUANTITY: SEE PLANS

SIGN WIDTH: 3′-0″
HEIGHT: 2′-6″
TOTAL AREA: 7.5 Sq.Ft.

BORDER TYPE: INSET
RECESS: 0.47″
WIDTH: 0.63″
RADII: 1.5″

NO. Z BARS:
LENGTH:

BACKG COLOR: Fluorescent Orange
COPY COLOR: Black

SYMBOL	X	Y	WID	HT

MAT′L: 0.080″ (2.0 mm) ALUMINUM

DESIGN BY: CLM
PROJECT ID: HB-0050

CHECKED BY: TAG
LOCATION:

July 22, 2025
DIV: 11

USE NOTES: 1,2

1. Legend and border shall be direct applied black non-reflective sheeting.
2. Background shall be NC GRADE B fluorescent orange retroreflective sheeting.

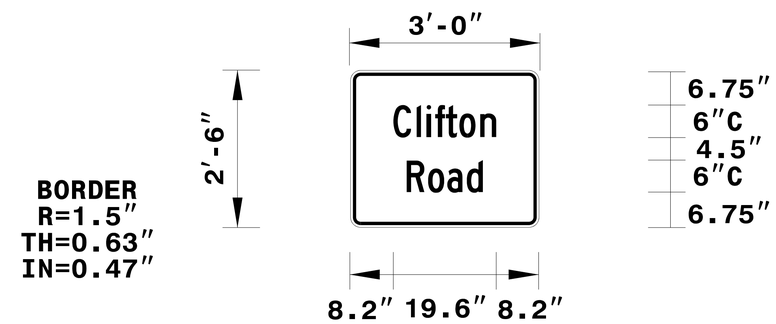

Spacing Factor is 1 unless specified otherwise

LETTER POSITIONS

Letter locations are panel edge to lower left corner

																										Series/Size Text Length
	C	l	i	f	t	o	n																			C 2000
	8.2	12.6	14.6	16.2	18.2	20.8	24.8																			19.6
	R	o	a	d																						C 2000
	10.8	14.8	18.5	22.2																						14.5

FILENAME: Work Zone_2_Rose_Carswell_Road

NORTH CAROLINA D.O.T. SIGN DETAIL

ms consultants, inc.
5444 Wake Park Blvd.
Suite 160
Raleigh, NC 27607
NC License Number : C-3239

APPROVED: Signed by: Damian J George 7/12/2026
DATE: 6-17-2026
SEAL

NORTH CAROLINA PROFESSIONAL SEAL 061679 ENGINEER DAMIAN J. GEORGE

DOCUMENT NOT CONSIDERED FINAL UNLESS ALL SIGNATURES COMPLETED

DIVISION OF HIGHWAYS · STATE OF NORTH CAROLINA · DEPARTMENT OF TRANSPORTATION · WORK ZONE TRAFFIC CONTROL

SIGN DESIGN

6/18/2026
pw://ncdot-pw.bentley.com:ncdot-pw-01/Documents/Division_11/HB-0050/Work Zone Traffic Control/HB-0050-TC-TMP-3
User:cMengelkamp

TIP PROJECT: HB-0050

STATE OF NORTH CAROLINA
DIVISION OF HIGHWAYS

PLAN FOR PROPOSED
HIGHWAY EROSION CONTROL

ASHE COUNTY

STATE	STATE PROJECT REFERENCE NO.	SHEET NO.	TOTAL SHEETS
N.C.	HB-0050	EC-1	

STATE PROJ. NO.	F. A. PROJ. NO.	DESCRIPTION

THIS PROJECT CONTAINS EROSION CONTROL PLANS FOR CLEARING AND GRUBBING PHASE OF CONSTRUCTION.

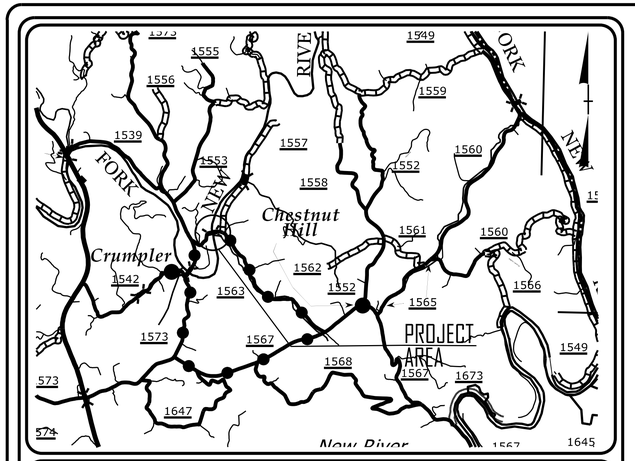

VICINITY MAP
NOT TO SCALE

LOCATION: *REPLACE BRIDGE NO. 040463 ON SR 1563 (CLIFTON ROAD) OVER NORTH FORK NEW RIVER*

TYPE OF WORK: *GRADING, PAVING, STRUCTURE AND DRAINAGE*

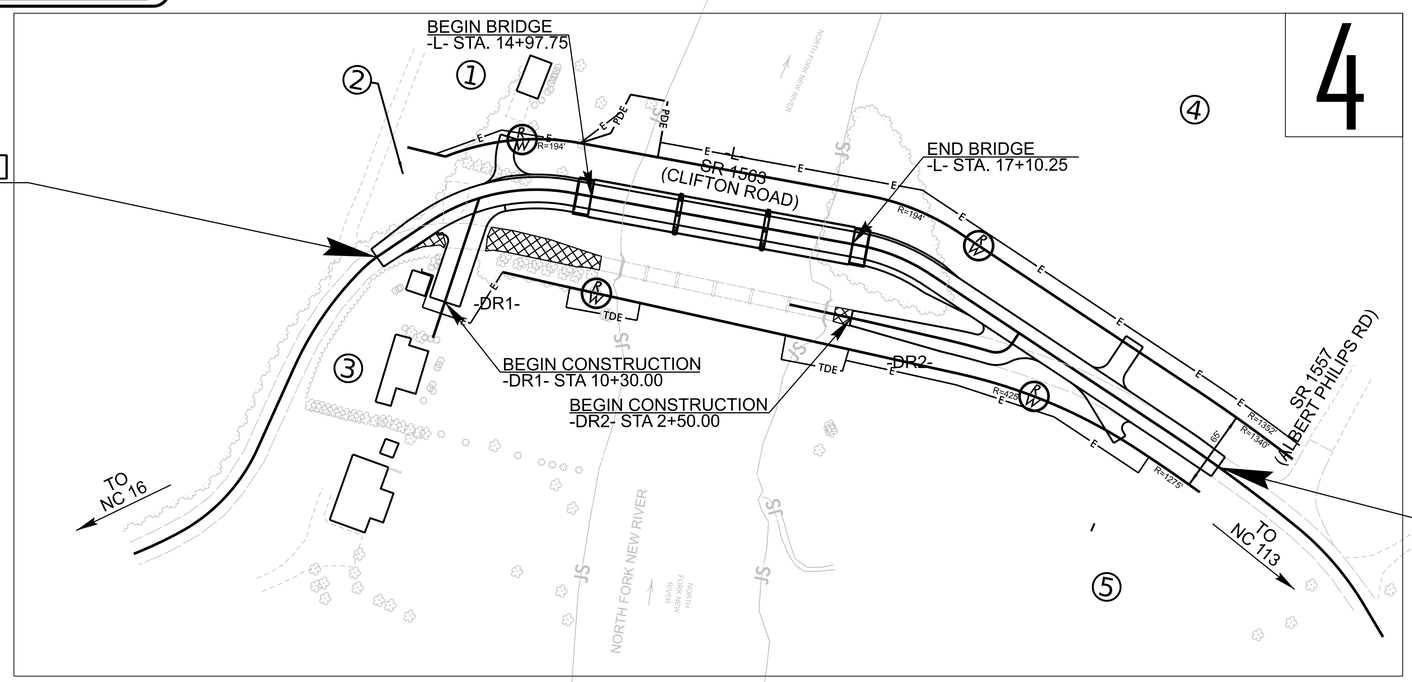

NAD 83/2011
NAVD 88/2012a

THIS PROJECT HAS BEEN DESIGNED TO SENSITIVE WATERSHED STANDARDS.

HIGH QUALITY WATER(S) EXIST ON THIS PROJECT

High Quality Water Zone(s) Exist
From Sta. -L- 13+15.00
to Sta. -L- 20+50.00
Refer To E. C. Special Provisions for Special Considerations.

ENVIRONMENTALLY SENSITIVE AREA(S) EXIST ON THIS PROJECT

Refer To E. C. Special Provisions for Special Considerations.

**DESIGN EXCEPTION FOR DESIGN SPEED, 15 MPH
THIS PROJECT IS NOT WITHIN ANY MUNICIPAL BOUNDARIES.
CLEARING ON THIS PROJECT SHALL BE PERFORMED TO THE LIMITS ESTABLISHED BY METHOD III.

GRAPHIC SCALE

50 25 0 50 100
PLANS

THESE EROSION AND SEDIMENT CONTROL PLANS COMPLY WITH THE REGULATIONS SET FORTH BY THE NCG 010000 GENERAL STORMWATER CONSTRUCTION PERMIT ISSUED BY THE NORTH CAROLINA DEPARTMENT OF ENVIRONMENTAL QUALITY DIVISION OF ENERGY, MINERAL, AND LAND RESOURCES.

Prepared In the Office of:

MI ENGINEERING, PLLC

1011 SCHAUB DR, SUITE 100
RALEIGH, NC 27606
(919) 851-6606
FIRM PE NUMBER: P-0671

Designed by:

KAREN HEFNER, PE *3824*
NAME *LEVEL III CERTIFICATION NO.*

Roadway Standard Drawings

The "Roadway Standard Drawings"- Roadway Design Unit - N. C. Department of Transportation - Raleigh, N. C., dated January 2024 and the latest revision thereto are applicable to this project and by reference hereby are considered a part of these plans.

$DATE$
$FILE$
$USERNAME$

PROJECT REFERENCE NO.	SHEET NO.
HB-0050	EC-02

DIVISION OF HIGHWAYS
STATE OF NORTH CAROLINA

EROSION & SEDIMENT CONTROL LEGEND

Std. #	Description	Symbol
1605.01	Temporary Silt Fence	
1606.01	Special Sediment Control Fence	
1622.01	Temporary Berms and Slope Drains	
1630.02	Silt Basin Type B	
1630.03	Temporary Silt Ditch	TSD
1630.04	Stilling Basin	
1630.05	Temporary Diversion	TD
1630.06	Special Stilling Basin	
1630.07	Skimmer Basin	
1630.08	Tiered Skimmer Basin	
1630.09	Earthen Dam with Skimmer	
	Infiltration Basin	
	Rock Inlet Sediment Trap:	
1632.01	Type A	A
1632.02	Type B	B
1632.03	Type C	C

Std. #	Description	Symbol
1633.01	Temporary Rock Silt Check Type A	
1633.02	Temporary Rock Silt Check Type B	
1633.03	Temporary Rock Silt Check Type A with Excelsior Matting and Flocculant	
1634.01	Temporary Rock Sediment Dam Type A	
1634.02	Temporary Rock Sediment Dam Type B	
1635.01	Rock Pipe Inlet Sediment Trap Type A	A
1635.02	Rock Pipe Inlet Sediment Trap Type B	B
1636.01	Excelsior Wattle Check	
1636.01	Excelsior Wattle Check with Flocculant	
1636.01	Coir Fiber Wattle Check	
1636.01	Coir Fiber Wattle Check with Flocculant	
1636.02	Silt Fence Excelsior Wattle Break	EW
	Silt Fence Coir Fiber Wattle Break	CFW
1636.03	Excelsior Wattle Barrier	—EW—EW—EW—
1636.03	Coir Fiber Wattle Barrier	—CFW—CFW—CFW—

$DATE$
$FILEL$
$USERNAME!$

PROJECT REFERENCE NO.	SHEET NO.
HB-0050	EC-02A

ONSITE CONCRETE WASHOUT STRUCTURE WITH LINER

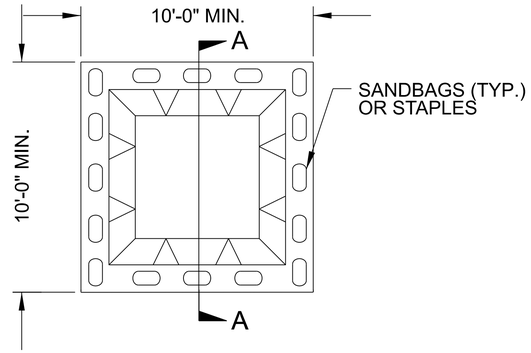

PLAN

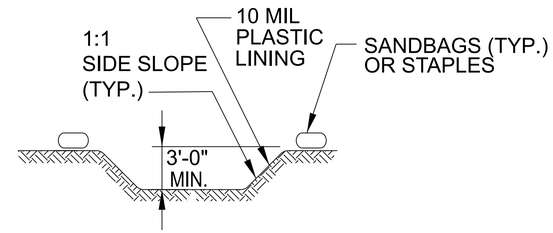

SECTION A-A

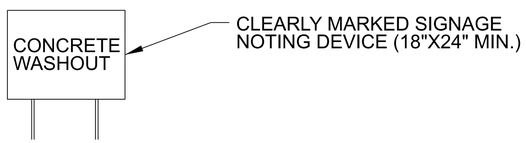

NOTES:
1. ACTUAL LOCATION DETERMINED IN FIELD

2. THE CONCRETE WASHOUT STRUCTURES SHALL BE MAINTAINED WHEN THE LIQUID AND/OR SOLID REACHES 75% OF THE STRUCTURES CAPACITY TO PROVIDE ADEQUATE HOLDING CAPACITY WITH A MINIMUM 12 INCHES OF FREEBOARD.

3.CONCRETE WASHOUT STRUCTURE NEEDS TO BE CLEARLY MARKED WITH SIGNAGE NOTING DEVICE.

BELOW GRADE WASHOUT STRUCTURE

NOT TO SCALE

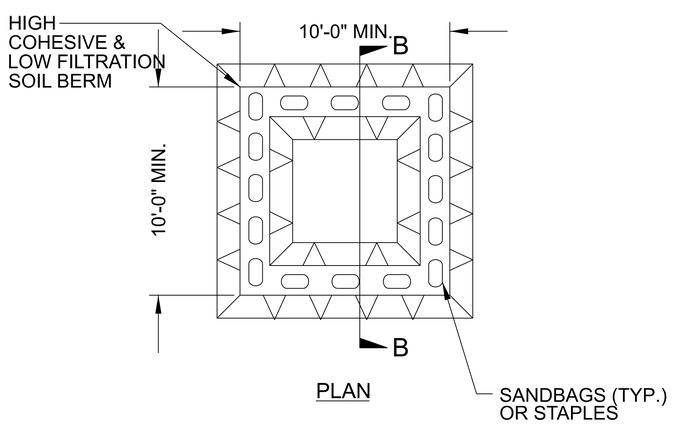

PLAN

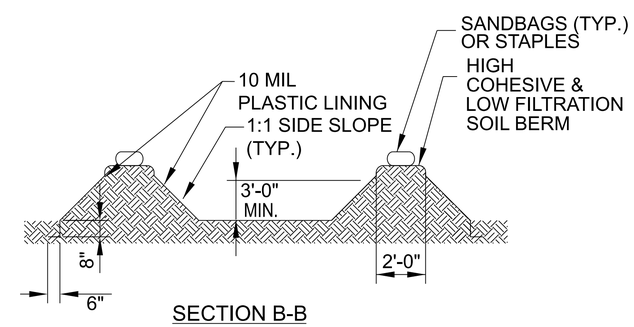

SECTION B-B

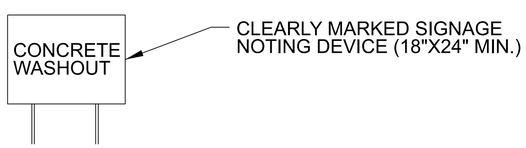

NOTES:
1. ACTUAL LOCATION DETERMINED IN FIELD

2. THE CONCRETE WASHOUT STRUCTURES SHALL BE MAINTAINED WHEN THE LIQUID AND/OR SOLID REACHES 75% OF THE STRUCTURES CAPACITY TO PROVIDE ADEQUATE HOLDING CAPACITY WITH A MINIMUM 12 INCHES OF FREEBOARD.

3.CONCRETE WASHOUT STRUCTURE NEEDS TO BE CLEARLY MARKED WITH SIGNAGE NOTING DEVICE.

ABOVE GRADE WASHOUT STRUCTURE

NOT TO SCALE

$DATE$
$FILE$
$(USERNAME)$

PROJECT REFERENCE NO.	SHEET NO.
HB-0050	EC-3

DIVISION OF HIGHWAYS
STATE OF NORTH CAROLINA

SOIL STABILIZATION SUMMARY SHEET

DITCH MATTING (STRAW) FOR EROSION CONTROL

CONST SHEET NO.	LINE	FROM STATION	TO STATION	SIDE	ESTIMATE (SY)
4	-L-	16+89	20+35	LT	195
4	-L-	17+95	19+38	RT	80
		SUBTOTAL, DITCH (STRAW)			275

DITCH MATTING (EXCELSIOR) FOR EROSION CONTROL

CONST SHEET NO.	LINE	FROM STATION	TO STATION	SIDE	ESTIMATE (SY)
4	-L-	17+14	17+95	RT	45
4	-L-	19+84	20+25	RT	25
		SUBTOTAL, DITCH (EXCELSIOR)			65
				SUBTOTAL, DITCH (EXCELSIOR)	65
				SUBTOTAL, DITCH (STRAW)	275
				SUBTOTAL, DITCHES	340
	MISCELLANEOUS MATTING TO BE INSTALLED AS DIRECTED BY THE ENGINEER				7,690
				TOTAL	8,030
				SAY	8,050

MATTING FOR EROSION CONTROL

CONST SHEET NO.	LINE	FROM STATION	TO STATION	SIDE	ESTIMATE (SY)

$DATE$
$FILEL$
$(USERNAME)$

PROJECT REFERENCE NO.	SHEET NO.
HB-0050	EC-3A

DIVISION OF HIGHWAYS
STATE OF NORTH CAROLINA

SOIL STABILIZATION TIMEFRAMES

SITE DESCRIPTION	STABILIZATION TIME	TIMEFRAME EXCEPTIONS
PERIMETER DIKES, SWALES, DITCHES AND SLOPES	7 DAYS	NONE
HIGH QUALITY WATER (HQW) ZONES	7 DAYS	NONE
SLOPES STEEPER THAN 3:1	7 DAYS	IF SLOPES ARE 10' OR LESS IN LENGTH AND ARE NOT STEEPER THAN 2:1, 14 DAYS ARE ALLOWED.
SLOPES 3:1 TO 4:1	14 DAYS	7 DAYS FOR SLOPES GREATER THAN 50' IN LENGTH WITH SLOPES STEEPER THAN 4:1. 7 DAYS FOR PERIMETER DIKES, SWALES, DITCHES PERIMETER SLOPES, AND HQW ZONES
ALL OTHER AREAS WITH SLOPES FLATTER THAN 4:1	14 DAYS	7 DAYS FOR PERIMETER DIKES, SWALES, DITCHES PERIMETER SLOPES, AND HQW ZONES

$DATE$
$FILEL$
$(USERNAME)$

ROADWAY DESIGN ENGINEER

HYDRAULICS ENGINEER

PREPARED BY

ms consultants, inc.
5444 Wade Park Blvd.
Suite 160
Raleigh, NC 27607
NC License Number : C-3239

MI ENGINEERING
1011 SCHAUB DRIVE, SUITE 100
RALEIGH, NC 27606
(919) 851-6950
FIRM PE NUMBER: P-0571

CLEARING & GRUBBING
EROSION CONTROL FOR
CONSTRUCTION SHEET 04

REVISIONS

DETAIL 4A
SPECIAL BASE DITCH
(Not to Scale)

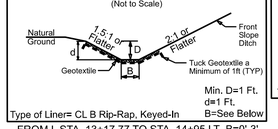

FROM L STA. 13+17.77 TO STA. 14+95 LT, B=0'-3'
75 TONS CL B, 180 SY GEOTEXTILE

DETAIL 4B
STANDARD 'V' DITCH
(Not to Scale)

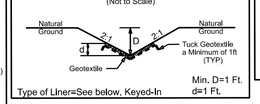

FROM L STA. 16+89 TO STA. 17+03, 34' RT.
L=14', S=0.31%, DDE= 4 CY
8 TONS CL I, 13 SY GEOTEXTILE
FROM L STA. 17+03 TO STA. 17+15, 34' RT
L=12 ', S=0.31%, DDE=1 CY
2 TONS CL B, 5 SY GEOTEXTILE
FROM DR2 STA. 2+20 TO STA. 2+35 RT.
L=15', S=0.52%, DDE= 5 CY
12 TONS CL I, 14 SY GEOTEXTILE
FROM DR2 STA. 2+35 TO STA. 2+50 RT
L=14 ', S=0.52%, DDE=5 CY
2.5 TONS CL B, 11 SY GEOTEXTILE

DETAIL 4C
STANDARD 'V' DITCH
(Not to Scale)

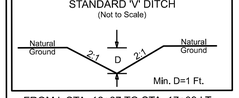

FROM L STA. 16+87 TO STA. 17+09 LT
L=20 ', S=2.41%, DDE=4.6 CY

DETAIL 4D
STANDARD BASE DITCH
(Not to Scale)

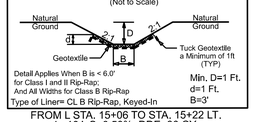

FROM L STA. 15+06 TO STA. 15+22 LT.
L=16 ', S=0.50%, DDE=30 CY
7 TONS CL B, 22 SY GEOTEXTILE

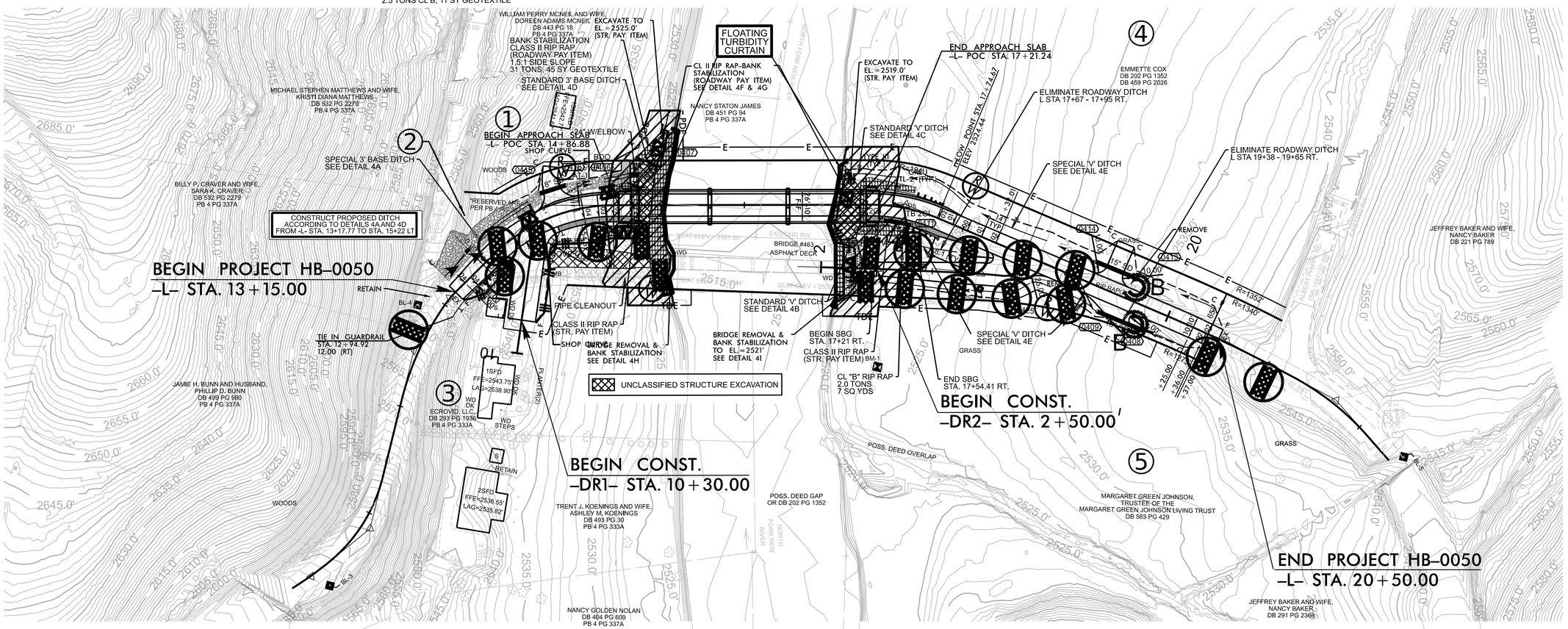

ALL EROSION CONTROL DEVICES SHOWN ARE LOCATED WITHIN EXISTING R/W OR EASEMENT.

NOTE:
PRIOR TO INSTALLATION OF EROSION CONTROL DEVICES, CONTRACTOR SHALL VERIFY BOUNDARIES OF JURISDICTIONAL AREAS AND DELINEATE WITH SAFETY FENCE OR FLAGGING.

NOTE:
CONTRACTOR SHALL PROVIDE GROUND COVER ON EXPOSED SLOPES IN ACCORDANCE WITH THE "SOIL STABILIZATION TIMEFRAMES", SEE EC-3A.

NOTE:
PLACE TEMPORARY ROCK SEDIMENT DAMS TYPE – B AND TEMPORARY ROCK SILT CHECKS TYPE – A AT DRAINAGE OUTLETS.

ENVIRONMENTALLY SENSITIVE AREA
SEE PROJECT SPECIAL PROVISIONS

DETAIL 4F
BANK STABILIZATION
(Not to Scale)

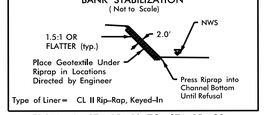

FROM -L- STA. 15+13 TO STA. 15+38
EST. 187 TONS, 223 SY GEOTEXTILE

DETAIL 4G
BANK STABILIZATION
(Not to Scale)

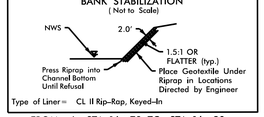

FROM -L- STA. 16+78 TO STA. 16+90
EST. 61 TONS, 91 SY GEOTEXTILE

DETAIL 4H
BRIDGE REMOVAL & BANK STABILIZATION
@ EX. ABUTMENT 1
(Not to Scale)

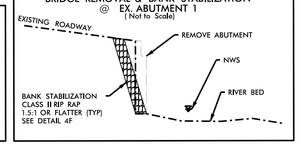

DETAIL 4I
BRIDGE REMOVAL & BANK STABILIZATION
@ EX. ABUTMENT 2
(Not to Scale)

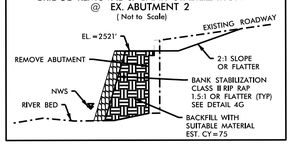

SEE PLAN VIEW FOR LIMITS

SEE SHEET 5 FOR PROFILES
SEE SHEET 2B-1 FOR GEOMETRY DETAIL

NORTH CAROLINA
DEPARTMENT OF TRANSPORTATION
ASHE COUNTY

ROADWAY DESIGN UNIT

ROADWAY DESIGN ENGINEER

HYDRAULICS ENGINEER

PREPARED BY

ms consultants, inc.
5444 Wade Park Blvd.
Suite 160
Raleigh, NC 27607
NC License Number : C-3235

MI ENGINEERING
1011 SCHAUB DRIVE, SUITE 100
RALEIGH, NC 27606
(919) 851-6950
FIRM PE NUMBER: P-0571

FINAL GRADE
EROSION CONTROL FOR
CONSTRUCTION SHEET 04

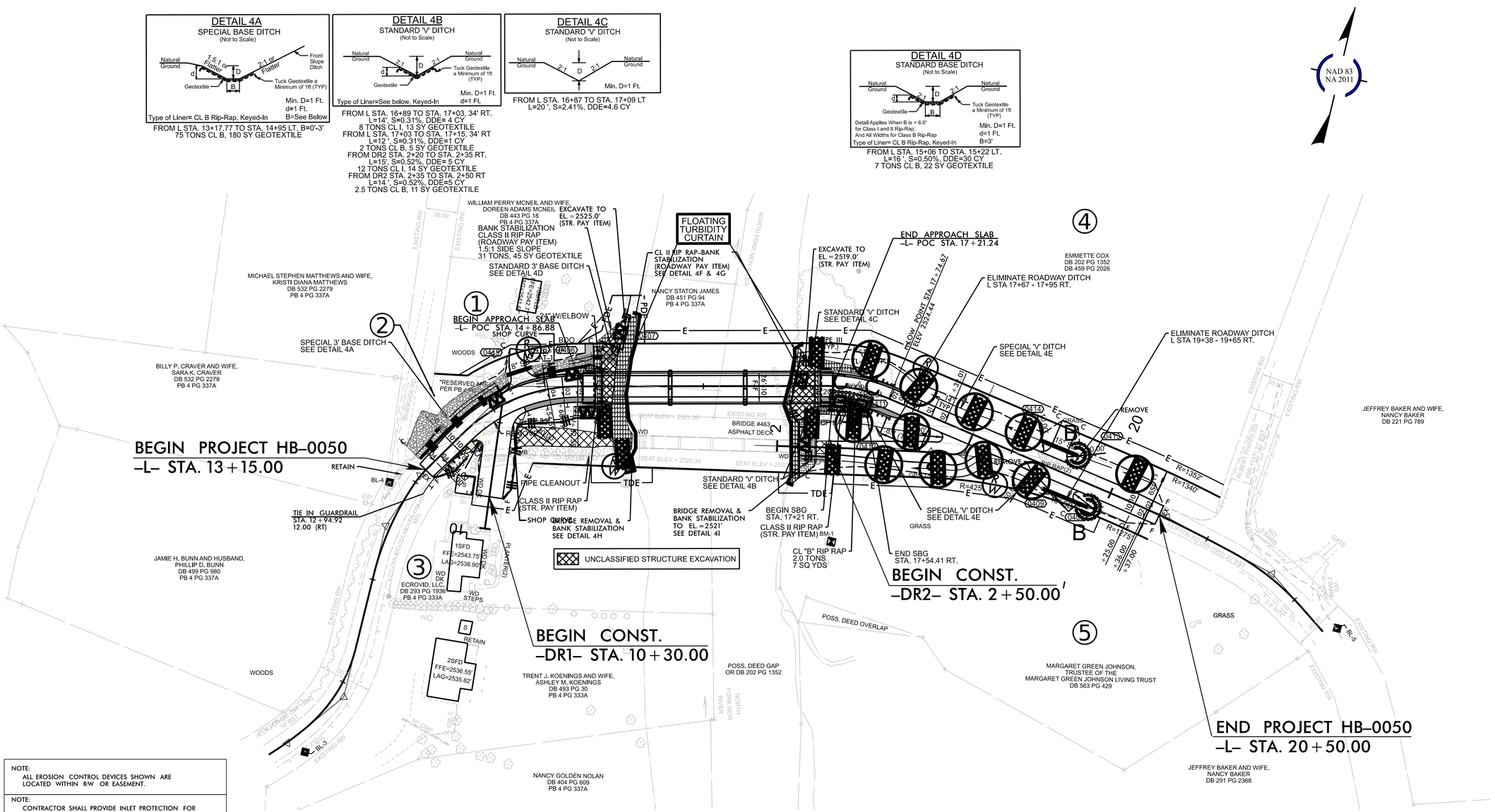

NOTE:
ALL EROSION CONTROL DEVICES SHOWN ARE LOCATED WITHIN RW OR EASEMENT.

NOTE:
CONTRACTOR SHALL PROVIDE INLET PROTECTION FOR PARTIALLY INSTALLED STORM DRAINS. THIS MEASURE SHOULD BE INSTALLED AT THE END OF EACH WORKING DAY.

NOTE:
CONTRACTOR SHALL MAINTAIN ALL DEVICES AS PROJECT IS BROUGHT UP TO GRADE.

NOTE:
INSTALL MATTING FOR EROSION CONTROL IN ALL PROPOSED DITCH LINES EXCEPT WHERE PERMANENT LINERS ARE SPECIFIED ON THE PLANS OR DIRECTED OTHERWISE BY THE ENGINEER.

NOTE:
CONTRACTOR SHALL PROVIDE GROUND COVER ON EXPOSED SLOPES IN ACCORDANCE WITH THE "SOIL STABILIZATION TIMEFRAMES", SEE EC-3.

SEE SHEET 5 FOR PROFILES
SEE SHEET 2B-1 FOR GEOMETRY DETAIL

REVISIONS

Docusign Envelope ID: 3E72E632-DBF2-8174-8081-83873C311A14

T.I.P.: HB-0050

CONTRACT:

TIP NO.	SHEET NO.
HB-0050	PMP-1

APPROVED: Signed by: Damian J. George 12/2026 948E61221813 4C2...

DATE: 6-18-2026

SEAL

NORTH CAROLINA PROFESSIONAL SEAL 061679 ENGINEER DAMIAN J. GEORGE

DOCUMENT NOT CONSIDERED FINAL UNLESS ALL SIGNATURES COMPLETED

STATE OF NORTH CAROLINA
DEPARTMENT OF TRANSPORTATION

PAVEMENT MARKING AND SIGNING PLAN

ASHE COUNTY

LOCATION: REPLACE BRIDGE NO. 040463 ON SR 1563 (CLIFTON ROAD) OVER NORTH FORK NEW RIVER

INDEX

SHEET NO.	DESCRIPTION
PMP-1	PAVEMENT MARKING AND SIGNING PLAN TITLE AND SCHEDULE SHEET
PMP-2	FINAL PAVEMENT MARKING AND SIGNING

ROADWAY STANDARD DRAWING

THE FOLLOWING ROADWAY STANDARDS AS APPEAR IN "ROADWAY STANDARD DRAWINGS" - CONTRACT STANDARDS AND DEVELOPMENT UNIT - N.C. DEPARTMENT OF TRANSPORTATION - RALEIGH, N.C., DATED JANUARY 2024 ARE APPLICABLE TO THIS PROJECT AND BY REFERENCE HEREBY ARE CONSIDERED A PART OF THESE PLANS:

STD. NO.	TITLE
1205.01	PAVEMENT MARKINGS - LINE TYPES AND OFFSETS
1205.02	PAVEMENT MARKINGS - TWO-LANE AND MULTILANE ROADWAYS
1205.04	PAVEMENT MARKINGS - INTERSECTIONS
1205.12	PAVEMENT MARKINGS - BRIDGES
1261.01	GUARDRAIL AND BARRIER DELINEATORS - INSTALLATION SPACING
1261.02	GUARDRAIL AND BARRIER DELINEATORS - TYPES AND MOUNTING
1262.01	GUARDRAIL END DELINEATION

PAVEMENT MARKING SCHEDULE

	PAINT(4")
P1	WHITE EDGELINE
P13	YELLOW DOUBLE CENTER

SUMMARY OF QUANTITIES

ITEM NO.		ITEM DESCRIPTION	QUANTITY	UNIT
DESC. NO.	SECT. NO.			
4155000000	907	DISPOSAL OF SIGN SYSTEM, U-CHANNEL	7	EA.

GENERAL NOTES

THE FOLLOWING GENERAL NOTES APPLY AT ALL TIMES FOR THE DURATION OF THE CONSTRUCTION PROJECT, EXCEPT WHEN OTHERWISE NOTED IN THE PLAN, OR DIRECTED BY THE ENGINEER.

A) INSTALL PAVEMENT MARKINGS AND PAVEMENT MARKERS ON THE FINAL SURFACE AS FOLLOWS:

ROAD NAME	MARKING	MARKER
SR 1563	PAINT	NONE

B) TIE PROPOSED PAVEMENT MARKING LINES TO EXISTING PAVEMENT MARKING LINES.

C) REMOVE/REPLACE ANY CONFLICTING/DAMAGED PAVEMENT MARKINGS AND MARKERS.

D) PASSING ZONES WILL BE DETERMINED IN THE FIELD AND MUST BE APPROVED BY THE ENGINEER.

E) PLACE TWO APPLICATIONS OF PAINT PAVEMENT MARKINGS ON THE FINAL WEARING SURFACE. PLACE THE SECOND APPLICATION OF PAINT UPON SUFFICIENT DRYING TIME OF THE FIRST.

- IF REMOVAL OR RELOCATION OF SIGNS ON PRIVATE STREET (NON-STATE MAINTAINED) IS REQUIRED DUE TO CONSTRUCTION, THE CONTRACTOR SHALL INFORM THE ENGINEER. THE WORK WILL BE COMPLETED BY OTHERS.
- ALL EXISTING SIGNS ON "U" CHANNEL POST WITHIN THE PROJECT LIMITS SHALL BE REMOVED AND DISPOSED OF UNLESS OTHERWISE NOTED ON PLANS.
- SEE ROADWAY PLANS FOR GUARD/GUIDE RAIL DETAILS.

PROJECT NOTES

1	DISPOSAL OF SIGN SYSTEM, U CHANNEL
2	SIGN REPLACED BY OTHERS

PLAN SUBMITTED TO:

Daniel Adams, PE NCDOT Project Engineer

STATE OF NORTH CAROLINA DEPARTMENT OF TRANSPORTATION

PLAN PREPARED BY: ms consultants, inc.

Damian J. George, PE Project Engineer

Cassidy L. Mengelkamp, EI Project Design Engineer

ms consultants, inc.
5444 Wake Park Blvd.
Suite 160
Raleigh, NC 27607
NC License Number : C-3239

7/8/2026
pw://ncdot-pw.bentley.com:ncdot-pw-01/Documents/Division_11/HB-0050/Signing and Delineation/Pavement Marking/Design/HB-0050_SGN_PMP_TITLE
User:CMengelkamp

Docusign Envelope ID: 3E72E632-DBF2-8174-8081-83873C311A14

TIP NO.	SHEET NO.
HB-0050	PMP-2

APPROVED: Signed by: Damian J. George 6/22/2026 948E61221813402

DATE: 6-18-26

SEAL

NORTH CAROLINA PROFESSIONAL SEAL 061679 ENGINEER DAMIAN J. GEORGE

DOCUMENT NOT CONSIDERED FINAL UNLESS ALL SIGNATURES COMPLETED

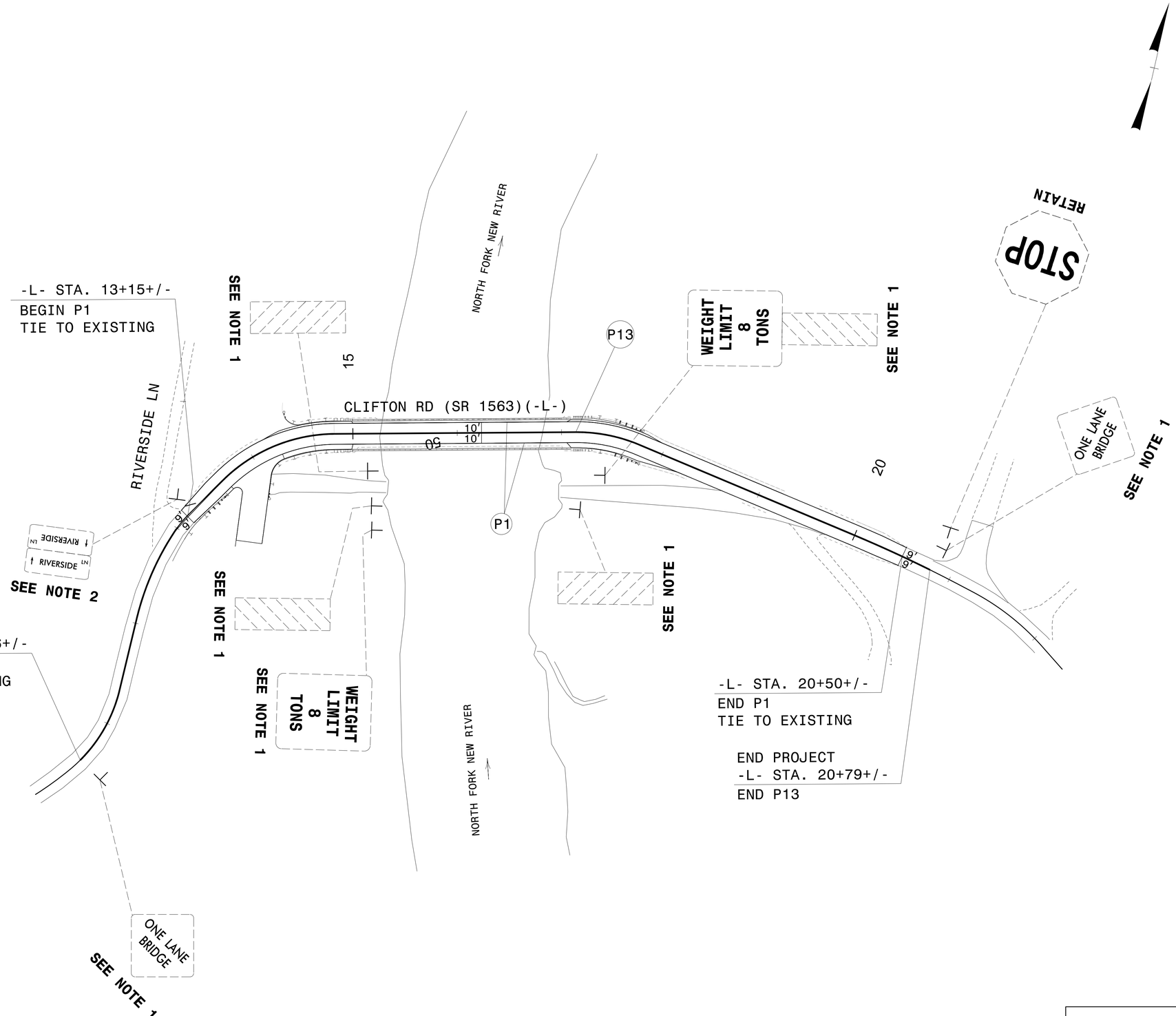

FINAL PAVEMENT MARKINGS & SIGNING

7/8/2026
P:\\ncdot-pw.bentley.com\ncdot-pw-01\Documents\Division 11\HB-0050\Signing and Delineation\Pavement Marking\Design\HB-0050_PMP_1.dgn
User:CMengelkamp

PROJ. REFERENCE NO.	SHEET NO.
HB-0050	X-1

CROSS SECTION INDEX

X-1	CROSS SECTION INDEX
X-1A	CROSS SECTION SUMMARY
X-2 THRU X-10	-L- SECTIONS
X-11 THRU X-13	-DR1- SECTIONS
X-14 THRU X-15	-DR2- SECTIONS

STATE OF NORTH CAROLINA
DIVISION OF HIGHWAYS

PROJ. REFERENCE NO.	SHEET NO.
HB-0050	X-1A

Approximate quantities only. Unclassified excavation, borrow excavation, fine grading, clearing and grubbing, and removal of existing pavement will be paid for at the lump sum price for "Grading".

NOTE: EMBANKMENT COLUMN DOES NOT INCLUDE BACKFILL FOR UNDERCUT

CROSS-SECTION SUMMARY

Station L	Uncl. Exc. (cu. yd.)	Embt (cu. yd.)	
13+15.00	0	0	
13+50.00	14	7	
14+00.00	36	10	
14+32.50	48	0	
14+50.00	25	0	
14+97.75	22	68	Begin Bridge
17+10.25	0	0	End Bridge
17+50.00	0	148	
18+00.00	28	46	
18+50.00	83	0	
19+00.00	104	0	
19+50.00	95	0	
20+00.00	55	3	
20+50.00	10	3	

Station DR1	Uncl. Exc. (cu. yd.)	Embt (cu. yd.)
10+30.00	0	0
10+50.00	13	1
11+00.00	27	1

Station DR2	Uncl. Exc. (cu. yd.)	Embt (cu. yd.)
2+50.00	0	0
3+00.00	19	0
3+50.00	57	0
3+75.00	52	0

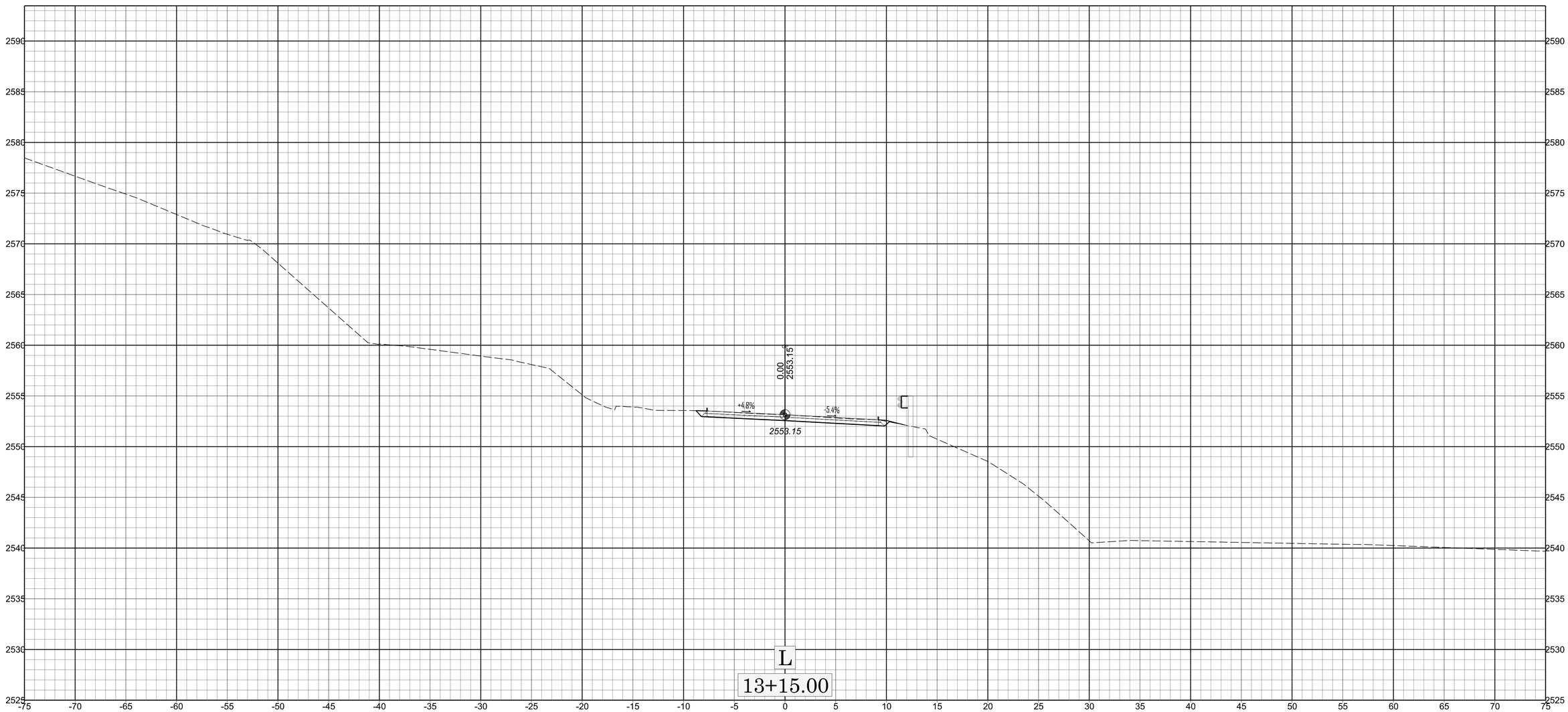
2590
2585
2580
2575
2570
2565
2560
2555
2550
2545
2540
2535
2530
2525
-75 -70 -65 -60 -55 -50 -45 -40 -35 -30 -25 -20 -15 -10 -5 0 5 10 15 20 25 30 35 40 45 50 55 60 65 70 75
0.00
2553.15
+4.8%
-5.4%
2553.15
L
13+15.00

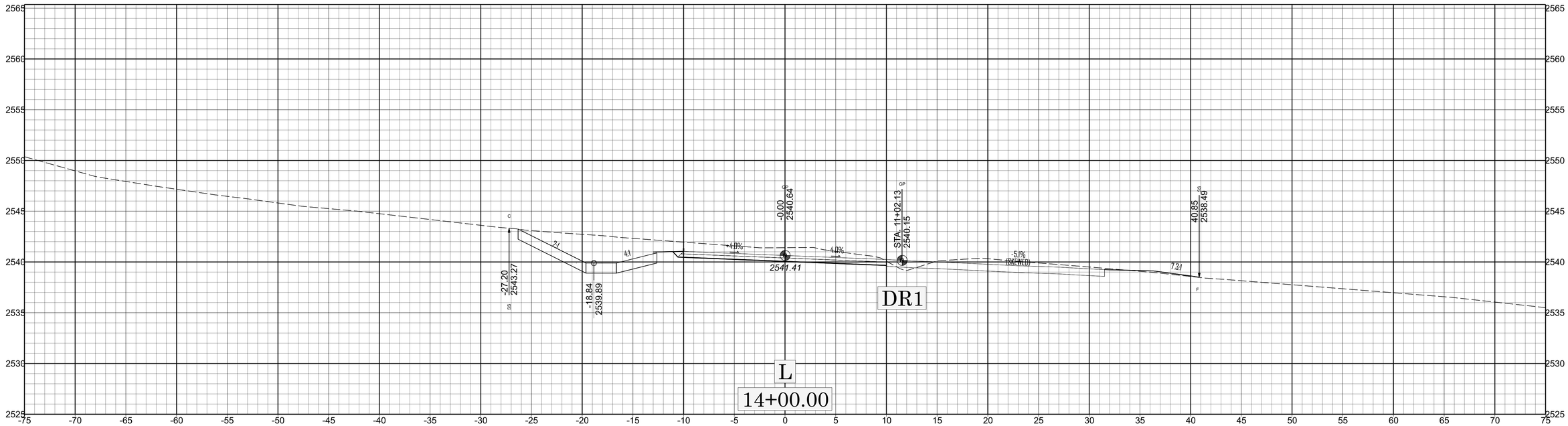
-27.20
2543.27
-18.84
2539.89
2
4
+4.0%
-4.0%
2541.41
-0.00
2540.64
STA. 11+02.13
2540.15
-5.1%
(ONCWED)
7.3
40.85
2538.49
DR1
L
14+00.00

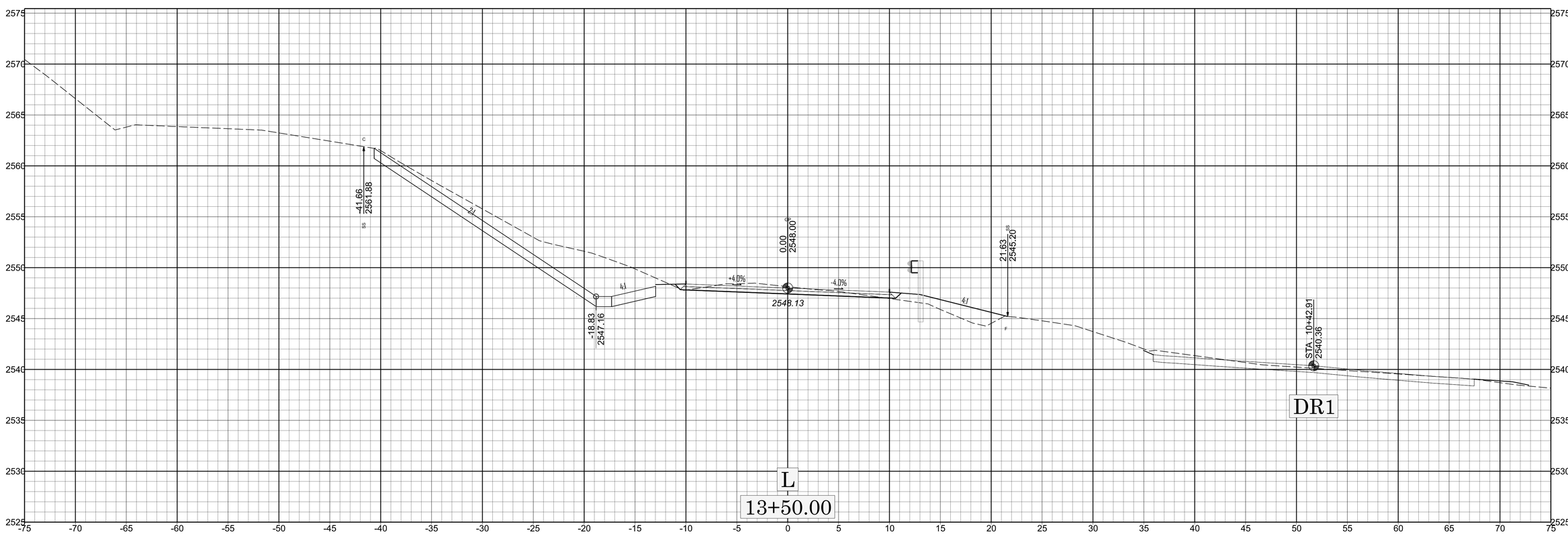
-41.66
2561.88
2
4
-18.83
2547.16
+4.0%
-4.0%
2548.13
0.00
2548.00
21.63
2545.20
STA. 10+42.91
2540.36
DR1
L
13+50.00

X 3

HB-0050

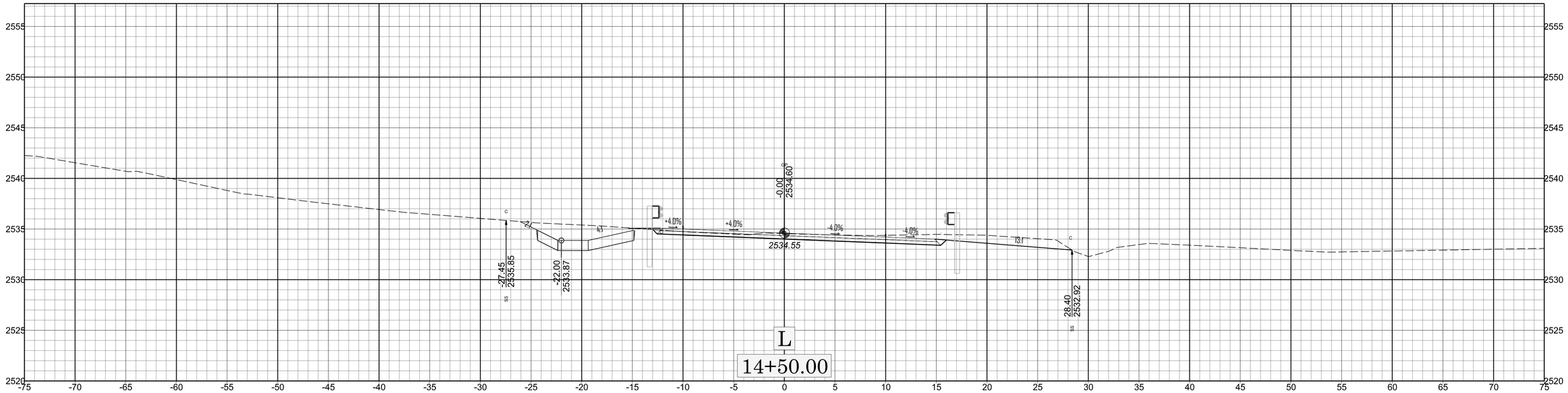
2555
2550
2545
2540
2535
2530
2525
2520
-75 -70 -65 -60 -55 -50 -45 -40 -35 -30 -25 -20 -15 -10 -5 0 5 10 15 20 25 30 35 40 45 50 55 60 65 70 75
-0.00
2534.60
2534.55
+4.0%
-4.0%
4:1
2:1
13:1
-27.45
2535.85
-22.00
2533.87
28.40
2532.92
L
14+50.00

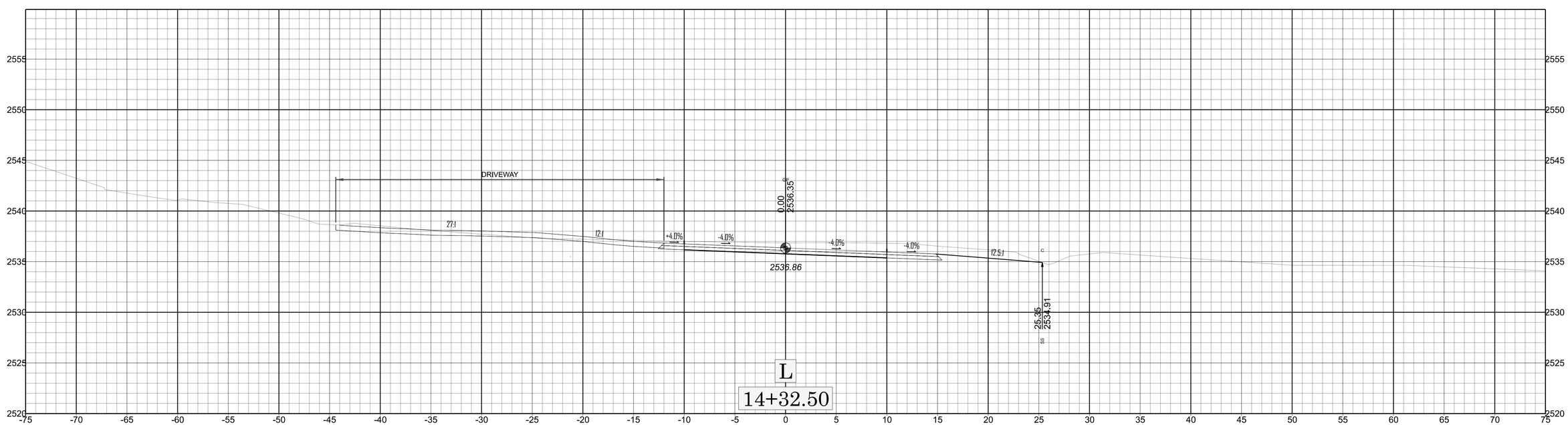
2555
2550
2545
2540
2535
2530
2525
2520
-75 -70 -65 -60 -55 -50 -45 -40 -35 -30 -25 -20 -15 -10 -5 0 5 10 15 20 25 30 35 40 45 50 55 60 65 70 75
DRIVEWAY
0.00
2536.35
2536.86
27:1
12:1
+4.0%
-4.0%
12.5:1
25.35
2534.91
L
14+32.50

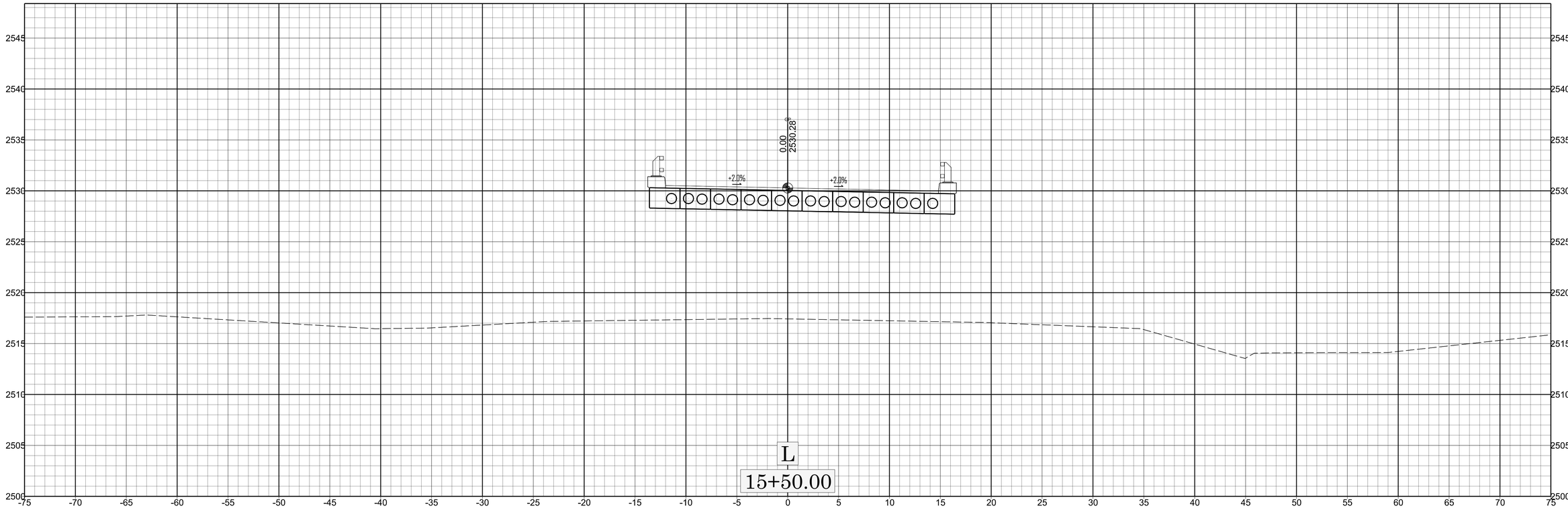
0.00
2530.28
+2.0%
+2.0%
L
15+50.00

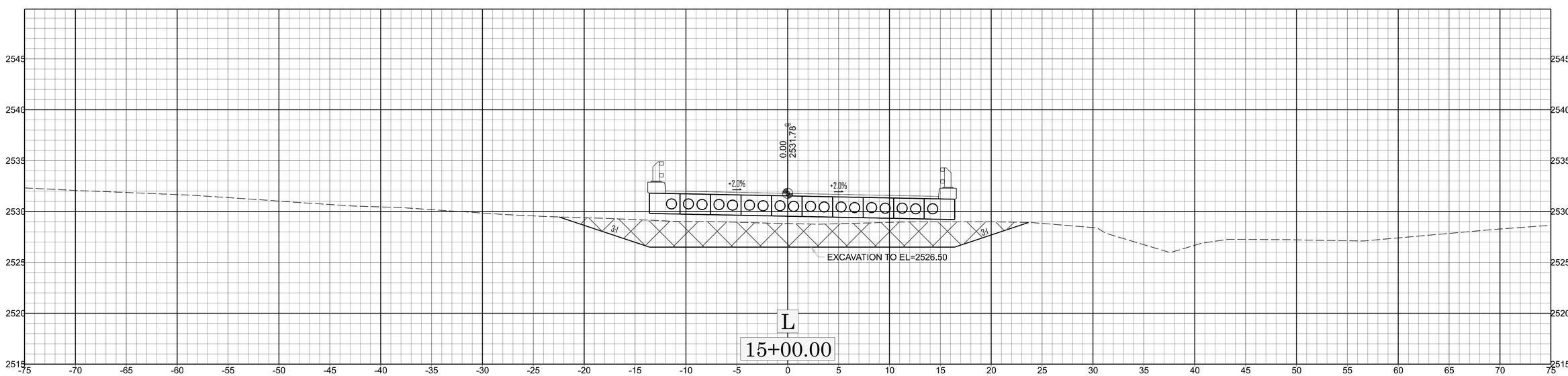
0.00
2531.78
+2.0%
+2.0%
3:1
3:1
EXCAVATION TO EL=2526.50
L
15+00.00

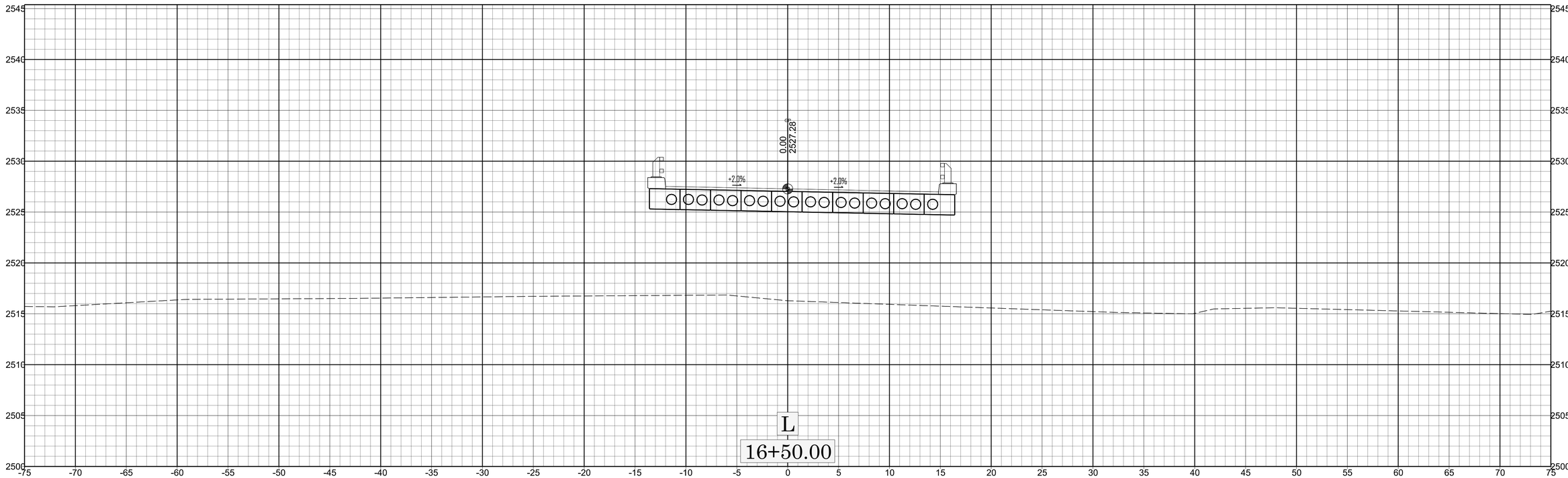

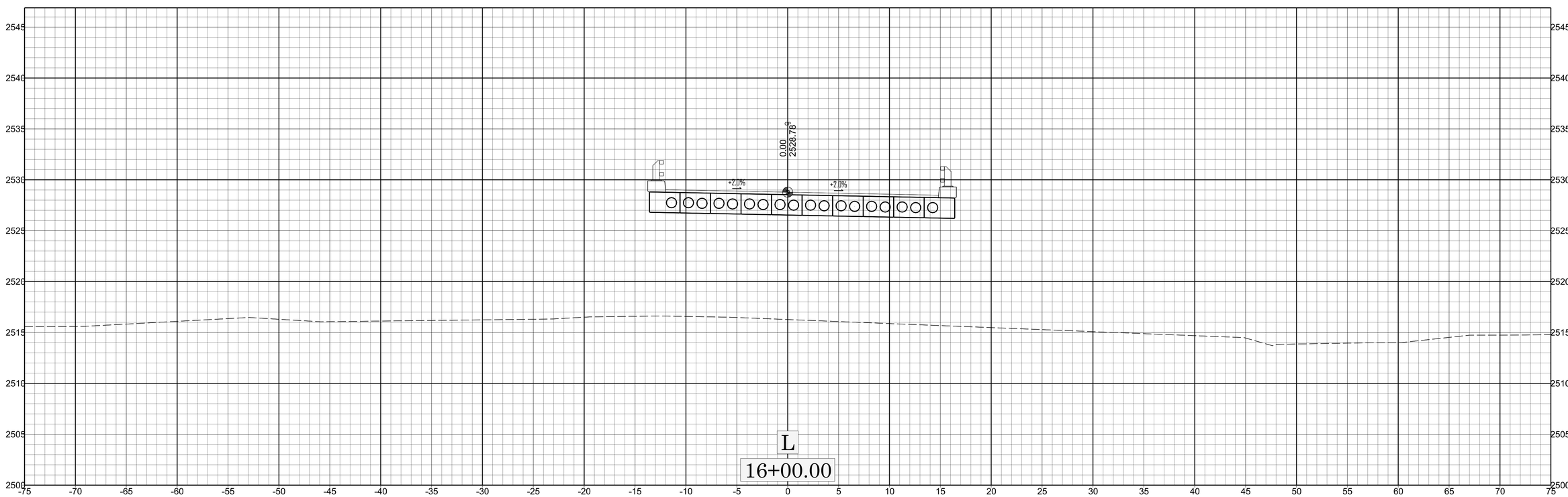

HB-0050

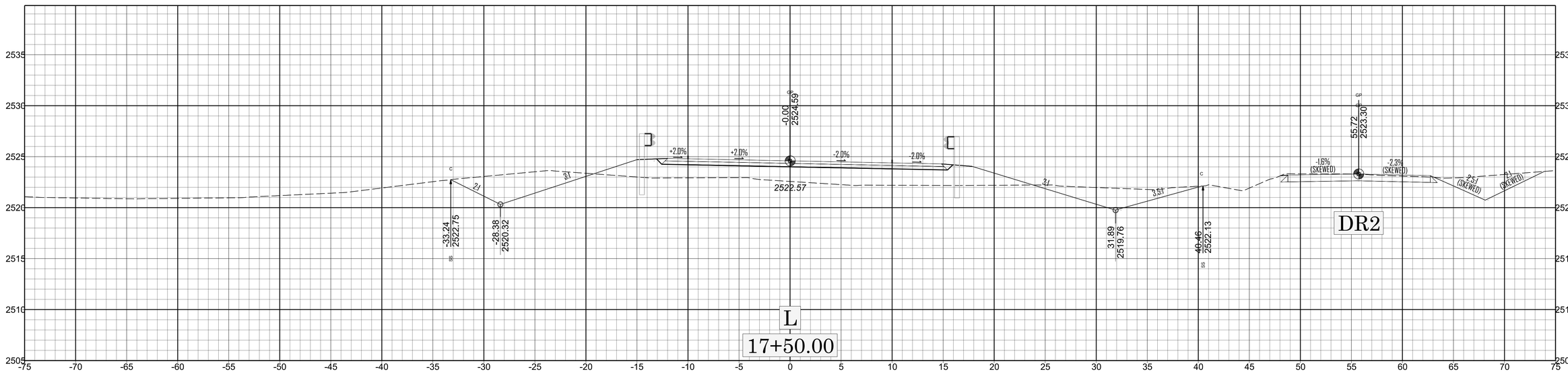
DR2
L
17+50.00
-0.00
2524.59
2522.57
+2.0%
+2.0%
-2.0%
-2.0%
-33.24
2522.75
-28.38
2520.32
31.89
2519.76
40.46
2522.13
55.72
2523.30
-1.6%
(SKEWED)
-2.3%
(SKEWED)
2:1
(SKEWED)
3:1
2:1
3:1
3.5:1

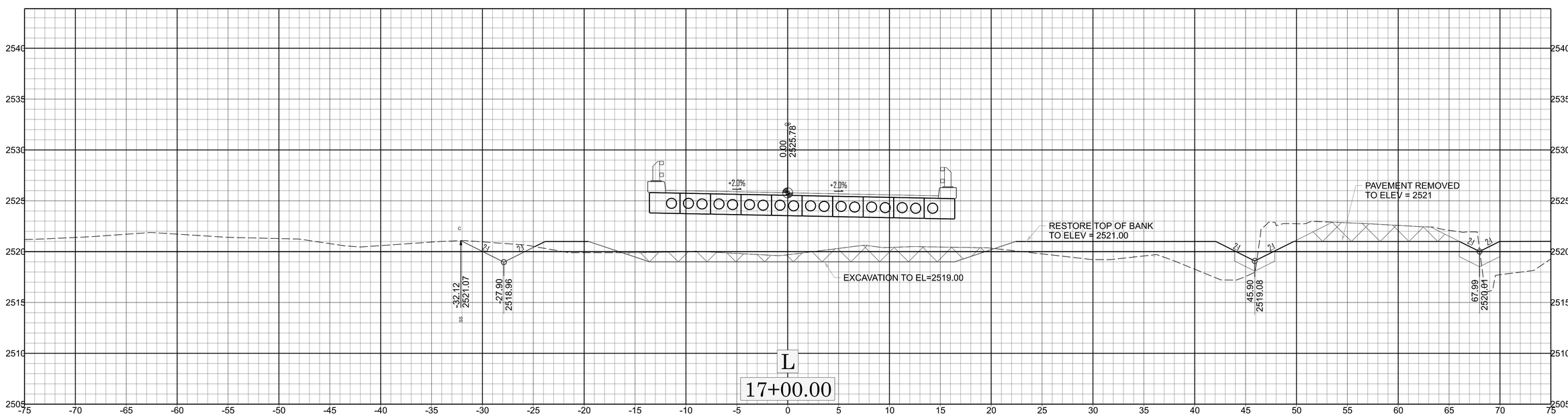
L
17+00.00
0.00
2525.78
+2.0%
+2.0%
RESTORE TOP OF BANK
TO ELEV = 2521.00
EXCAVATION TO EL=2519.00
PAVEMENT REMOVED
TO ELEV = 2521
-32.12
2521.07
-27.90
2518.96
45.90
2519.08
67.99
2520.61
2:1

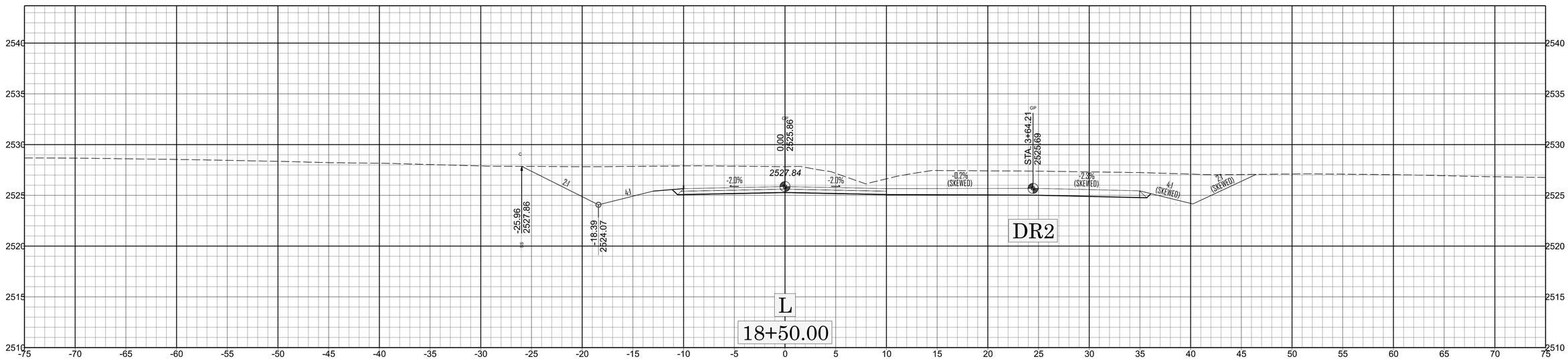
2540
2535
2530
2525
2520
2515
2510
-75 -70 -65 -60 -55 -50 -45 -40 -35 -30 -25 -20 -15 -10 -5 0 5 10 15 20 25 30 35 40 45 50 55 60 65 70 75
0.00
2525.86
2527.84
STA. 3+64.21
2526.69
-25.96
2527.86
-18.39
2524.07
2:1
4:1
-2.0%
-2.0%
-0.2%
(SKEWED)
-2.8%
(SKEWED)
4:1
(SKEWED)
2:1
(SKEWED)
DR2
L
18+50.00

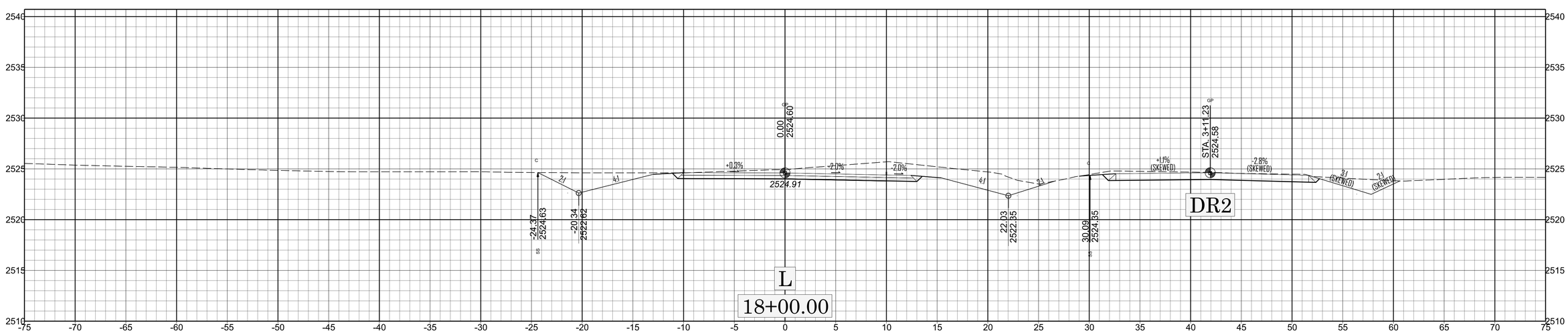
2540
2535
2530
2525
2520
2515
2510
-75 -70 -65 -60 -55 -50 -45 -40 -35 -30 -25 -20 -15 -10 -5 0 5 10 15 20 25 30 35 40 45 50 55 60 65 70 75
0.00
2524.60
2524.91
STA. 3+11.23
2524.58
+0.3%
-2.0%
-2.0%
+1.1%
(SKEWED)
-2.8%
(SKEWED)
2:1
4:1
4:1
2:1
3:1
(SKEWED)
2:1
(SKEWED)
-24.37
2524.63
-20.34
2522.62
22.03
2522.35
30.09
2524.35
DR2
L
18+00.00

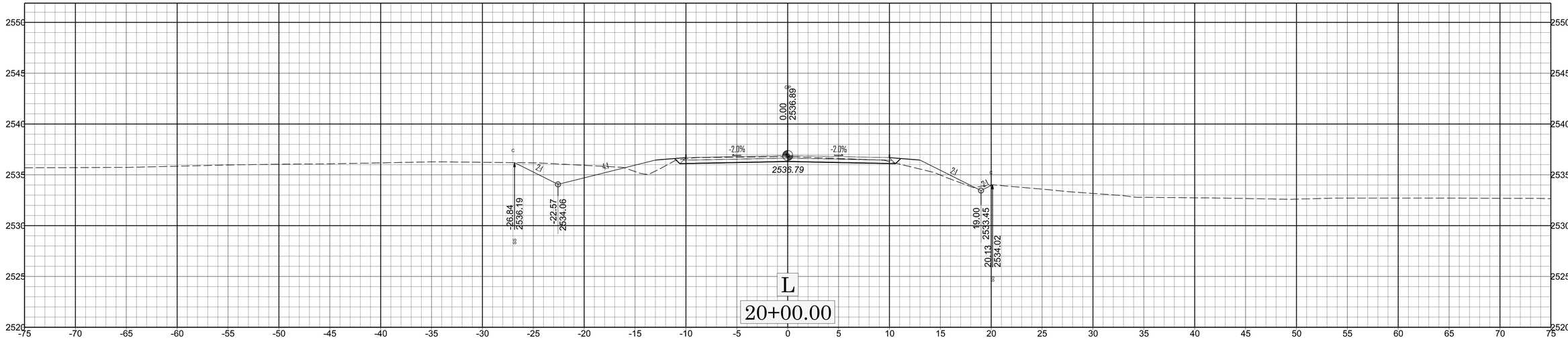
0.00
2536.89
-2.0%
-2.0%
2536.79
2:1
4:1
2:1
2:1
-26.84
2536.19
-22.57
2534.06
19.00
2533.45
20.13
2534.02
L
20+00.00

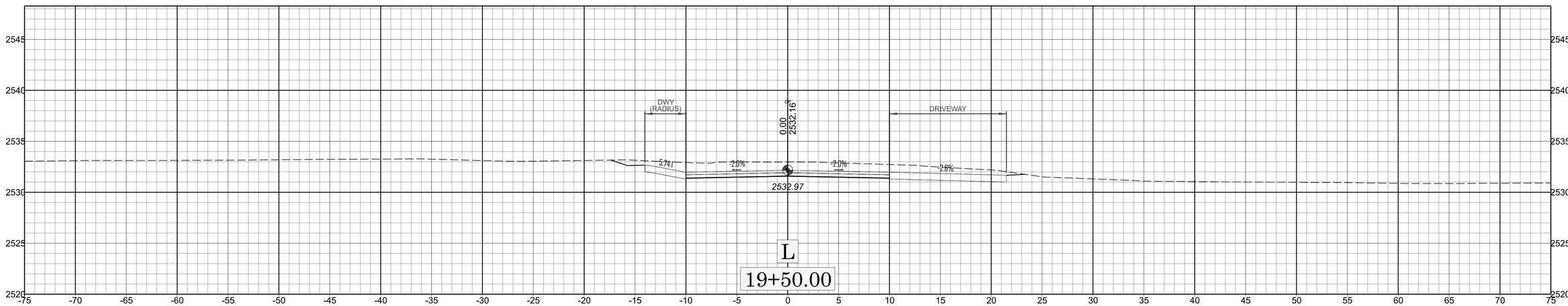
DWY
(RADIUS)
DRIVEWAY
0.00
2532.16
5.74:1
-2.0%
-2.0%
2.8%
2532.97
L
19+50.00

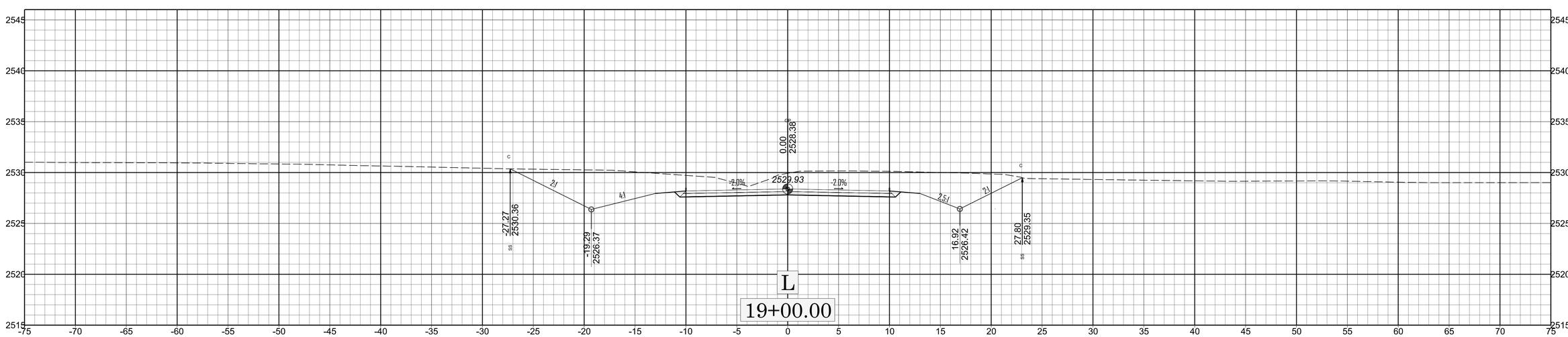
0.00
2528.38
-2.0%
-2.0%
2529.93
2:1
4:1
2.5:1
2:1
-27.27
2530.36
-19.29
2526.37
16.92
2526.42
27.80
2529.35
L
19+00.00

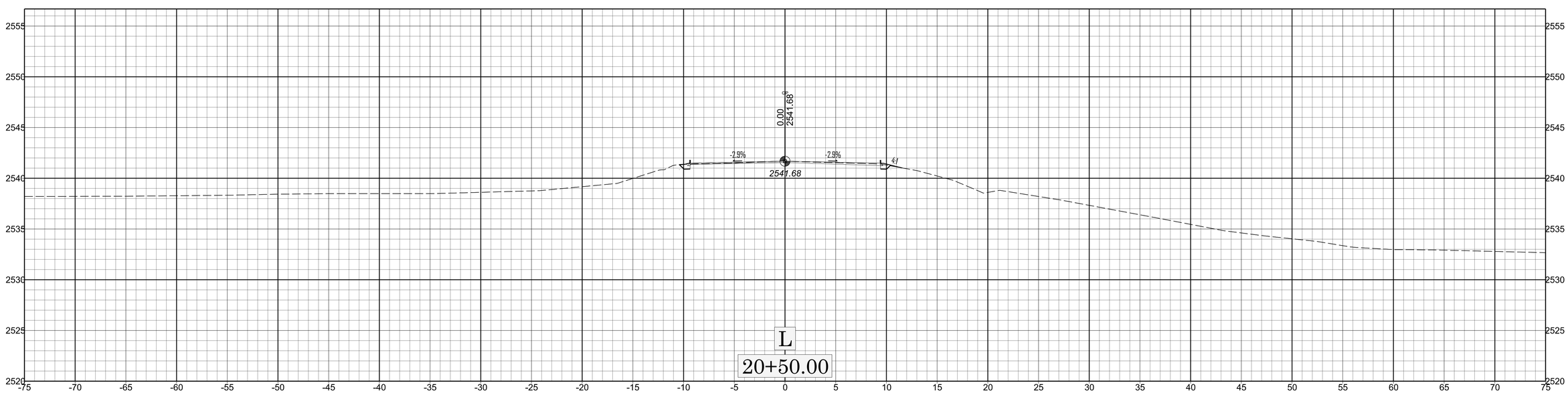
2555
2550
2545
2540
2535
2530
2525
2520
-75 -70 -65 -60 -55 -50 -45 -40 -35 -30 -25 -20 -15 -10 -5 0 5 10 15 20 25 30 35 40 45 50 55 60 65 70 75
0.00
2541.68
-2.9%
-2.9%
2541.68
4:1
L
20+50.00

HB-0050

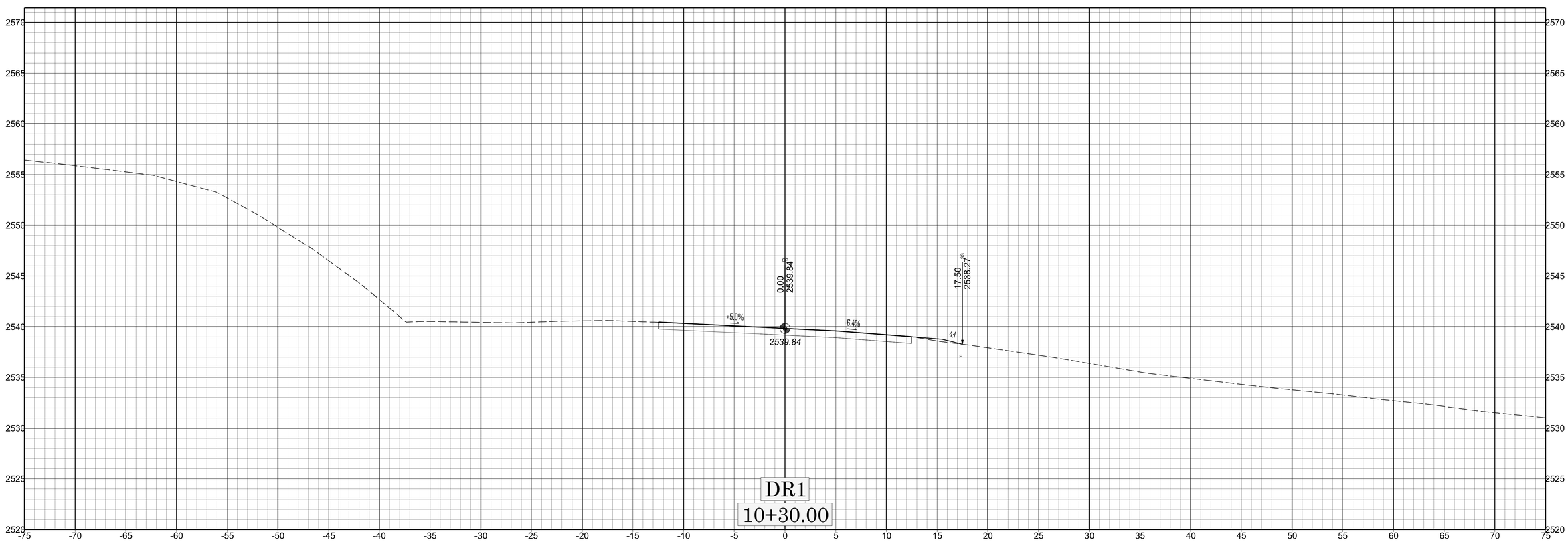
2570
2565
2560
2555
2550
2545
2540
2535
2530
2525
2520
-75 -70 -65 -60 -55 -50 -45 -40 -35 -30 -25 -20 -15 -10 -5 0 5 10 15 20 25 30 35 40 45 50 55 60 65 70 75
0.00
2539.84
17.50
2538.27
+5.0%
-6.4%
2539.84
41
DR1
10+30.00

X 11

HB-0050

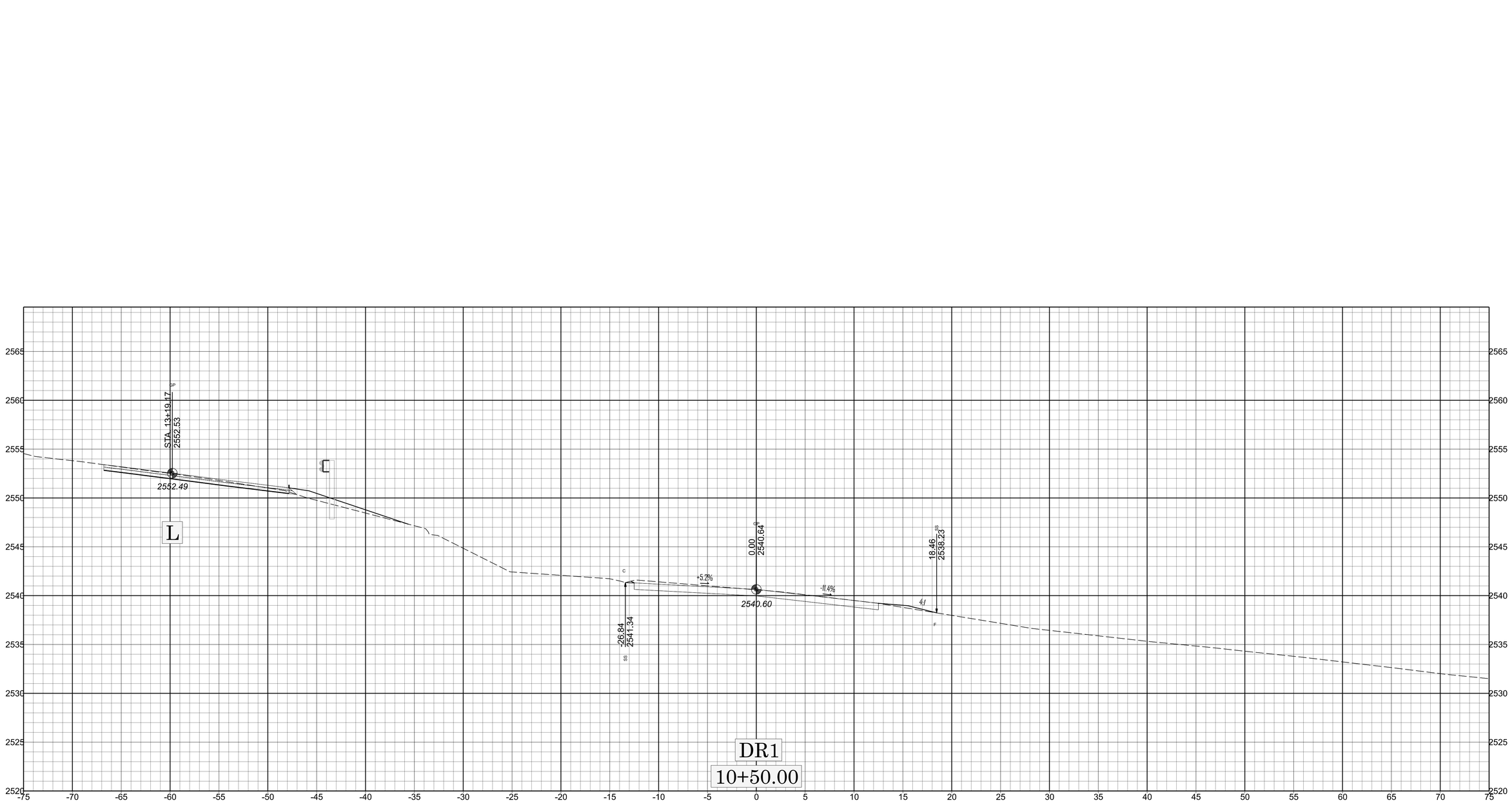
STA 13+19.17
2552.53
SP
2552.49
L
C
0.00
2540.64
GS
2540.60
+5.2%
-11.4%
4:1
18.46
2538.23
SS
F
-26.84
2541.34
SS
DR1
10+50.00
2565
2560
2555
2550
2545
2540
2535
2530
2525
2520
-75
-70
-65
-60
-55
-50
-45
-40
-35
-30
-25
-20
-15
-10
-5
0
5
10
15
20
25
30
35
40
45
50
55
60
65
70
75

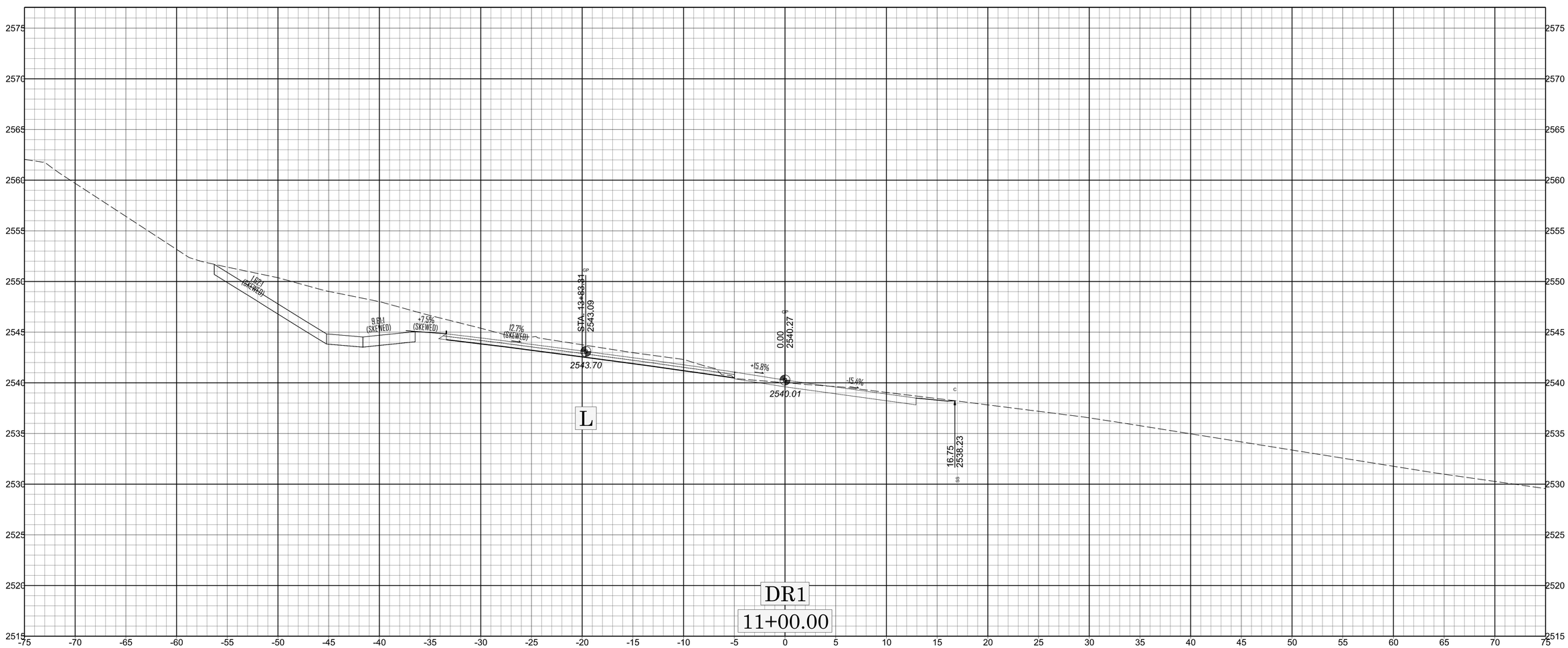
2575
2570
2565
2560
2555
2550
2545
2540
2535
2530
2525
2520
2515
-75 -70 -65 -60 -55 -50 -45 -40 -35 -30 -25 -20 -15 -10 -5 0 5 10 15 20 25 30 35 40 45 50 55 60 65 70 75
(BP)
(SKEWED)
9.6%
(SKEWED)
+7.5%
(SKEWED)
12.7%
(SKEWED)
CP
STA. 13+83.31
2543.09
2543.70
+15.8%
0.00
2540.27
2540.01
-15.4%
C
16.75
2538.23
SS
L
DR1
11+00.00

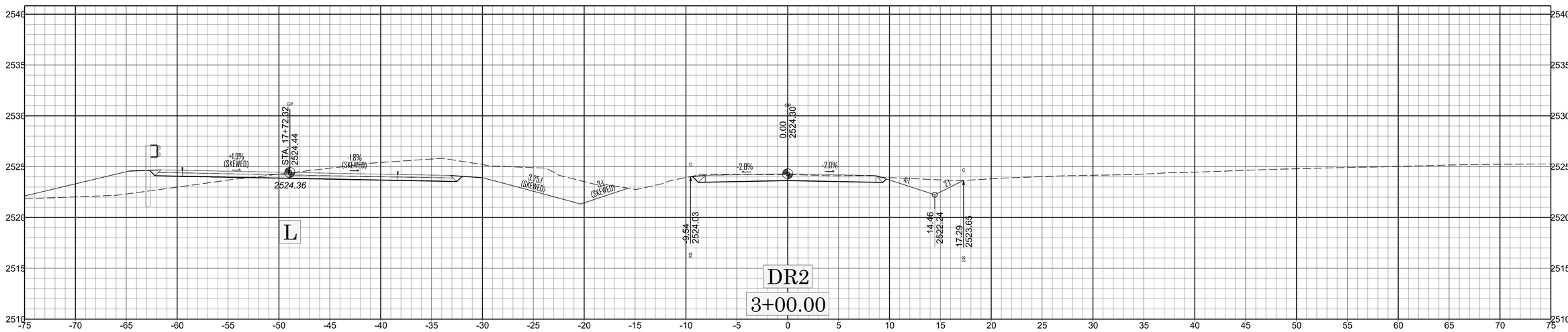
+1.9%
(SKEWED)
STA. 17+72.32
2524.44
-1.8%
(SKEWED)
2524.36
3.75:1
(SKEWED)
2:1
(SKEWED)
L
-9.54
2524.03
0.00
2524.30
-2.0%
-2.0%
14.46
2522.24
17.29
2523.65
DR2
3+00.00

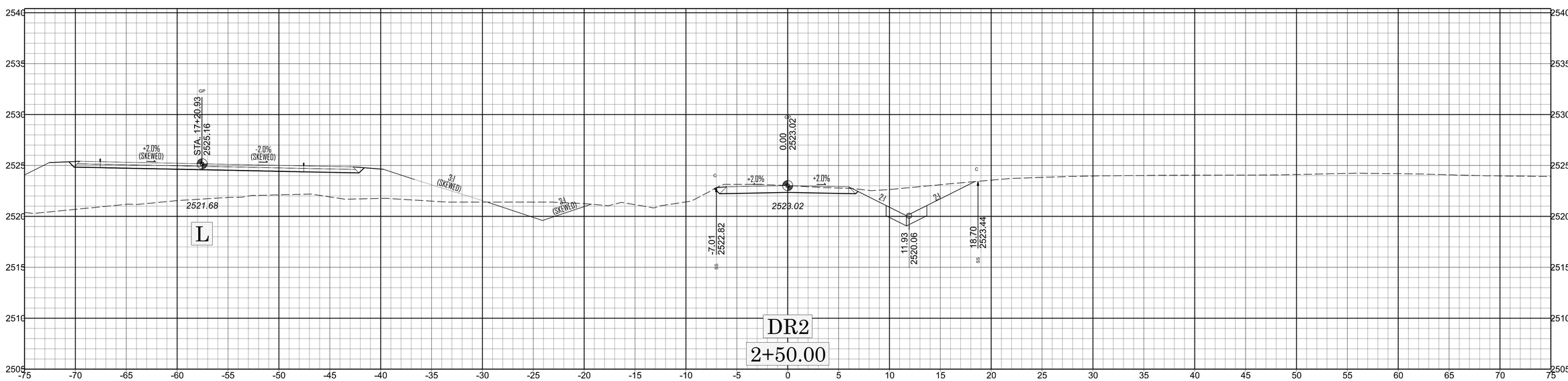
+2.0%
(SKEWED)
STA. 17+20.93
2525.16
-2.0%
(SKEWED)
2521.68
3:1
(SKEWED)
3:1
(SKEWED)
L
-7.01
2522.82
0.00
2523.02
+2.0%
+2.0%
2523.02
11.93
2520.06
18.70
2523.44
DR2
2+50.00

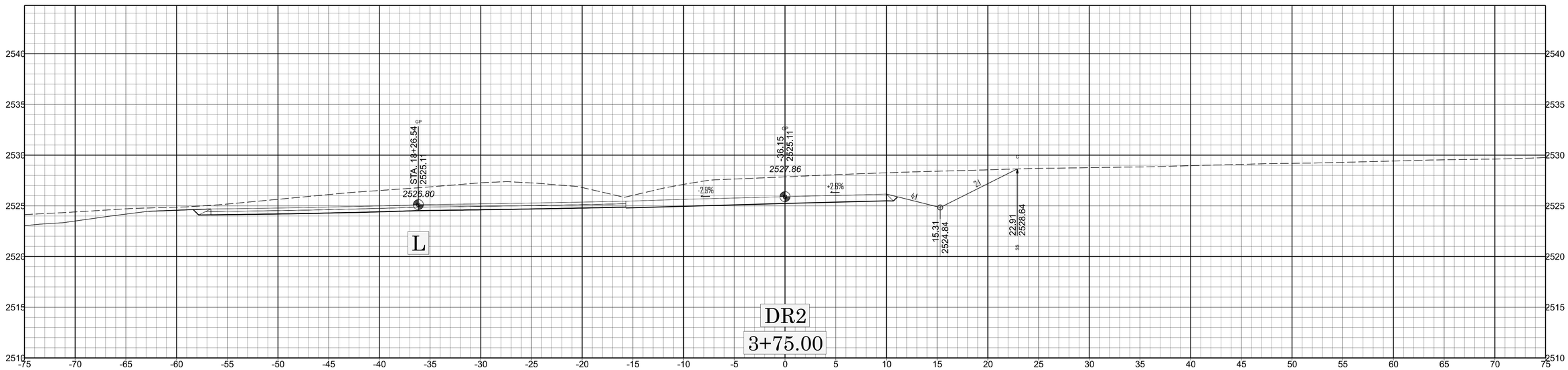
STA. 18+26.54
2525.11
2528.80
-36.15
2525.11
2527.86
-2.5%
+2.0%
4:1
2:1
15.31
2524.84
22.91
2528.64
L
DR2
3+75.00

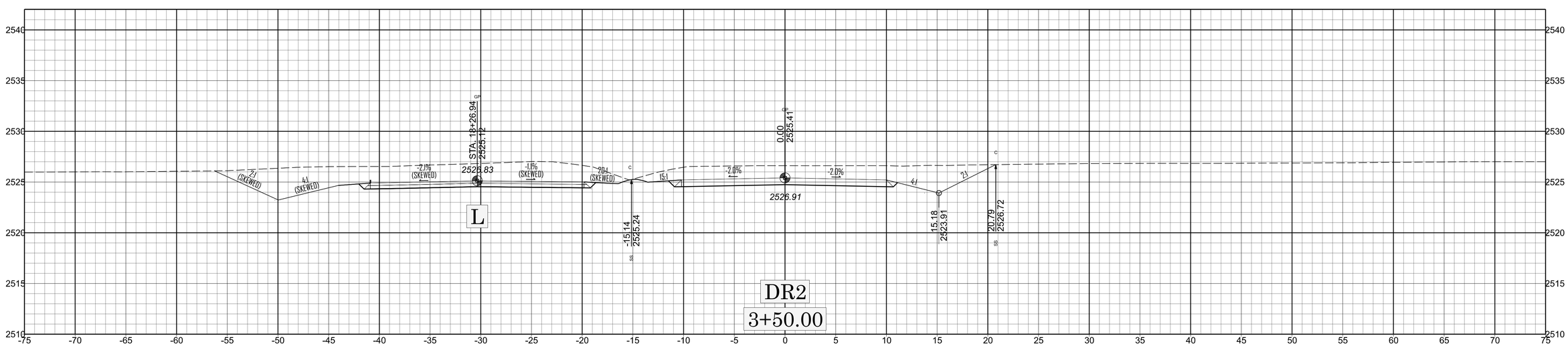
STA. 18+26.94
2525.12
2526.83
-2.0%
(SKEWED)
-1.0%
(SKEWED)
-2.0%
(SKEWED)
7:1
(SKEWED)
4:1
(SKEWED)
0.00
2525.41
15:1
-2.0%
-2.0%
2526.91
4:1
2:1
-15.14
2525.24
15.18
2523.91
20.79
2526.72
L
DR2
3+50.00

TIP PROJECT: HB-0050

CONTRACT: DK00482

STATE	STATE PROJECT REFERENCE NO.	SHEET NO.	TOTAL SHEETS
N.C.	HB-0050	0	23

STATE PROJ. NO.	F.A. PROJ. NO.	DESCRIPTION
50720.1.1	FBRG111	P.E.
50720.2.1	FBRG111	R / W
50720.2.2	FBRG111	UTILITIES
50720.3.1	FBRG111	CONST.

STATE OF NORTH CAROLINA
DIVISION OF HIGHWAYS

ASHE COUNTY

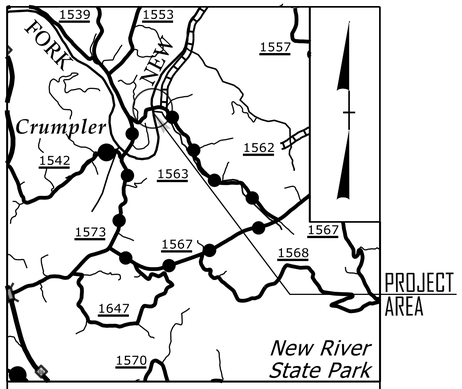

VICINITY MAP (NTS)
OFFSITE DETOUR ROUTE

LOCATION: REPLACE BRIDGE NO. 040463 ON SR 1563 (CLIFTON ROAD) OVER NORTH FORK NEW RIVER

TYPE OF WORK: GRADING, PAVING, STRUCTURE AND DRAINAGE

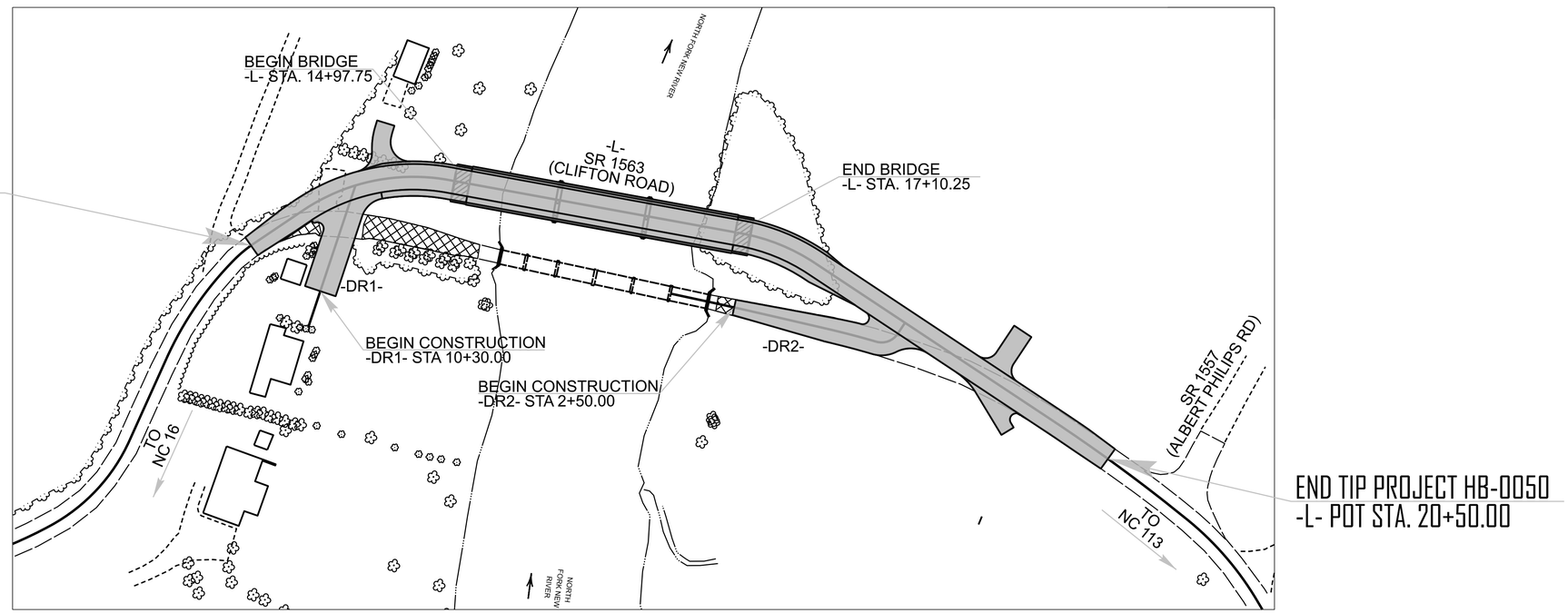

STRUCTURES

STATE OF NORTH CAROLINA DEPARTMENT OF TRANSPORTATION

DESIGN DATA

ADT (2026) = 133
ADT (2046) = 196
T = 8 %
V = 15 MPH (AS PER DESIGN EXCEPTION)

* TTST = 6% DUAL = 2%
FUNC CLASS = RURAL LOCAL
SUBREGIONAL TIER

PROJECT LENGTH

LENGTH ROADWAY STATE PROJECT HB-0050 = 0.099 MILES
LENGTH STRUCTURE PROJECT HB-0050 = 0.040 MILES

TOTAL LENGTH STATE PROJECT HB-0050 = 0.139 MILES

Prepared for:
DIVISION OF HIGHWAYS
DIVISION 11
801 STATESVILLE RD.
NORTH WILKESBORO NC, 28659

2024 STANDARD SPECIFICATIONS

LETTING DATE :

SEPTEMBER 17, 2026

RAMIE SHAW
PROJECT ENGINEER

JEFFREY KEPICH
PROJECT DESIGN ENGINEER

Docusign Envelope ID: 1744488F-FDFB-8A99-8142-3188EE09531A

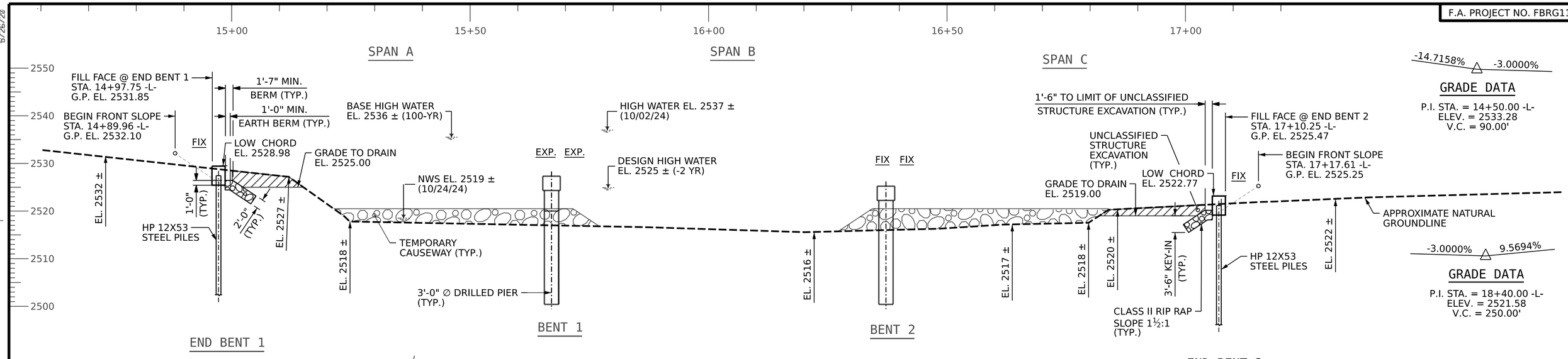

-14.7158% -3.0000%

GRADE DATA

P.I. STA. = 14+50.00 -L-
ELEV. = 2533.28
V.C. = 90.00'

-3.0000% 9.5694%

GRADE DATA

P.I. STA. = 18+40.00 -L-
ELEV. = 2521.58
V.C. = 250.00'

HORIZONTAL CURVE DATA -L-

P.I. STA. = 14+26.14 -L-
Δ = 44° 21' 53.40" (RT)
L= 119.24
T = 62.79
R = 154.00
D = 37° 12' 18.2"

P.I. STA. = 17+45.25 -L-
Δ = 23° 12' 23.30" (RT)
L= 62.37'
T = 31.62'
R = 154.00'
D = 37° 12' 18.2"

SECTION ALONG -L-

I HEREBY CERTIFY THESE PLANS
ARE THE AS-BUILT PLANS

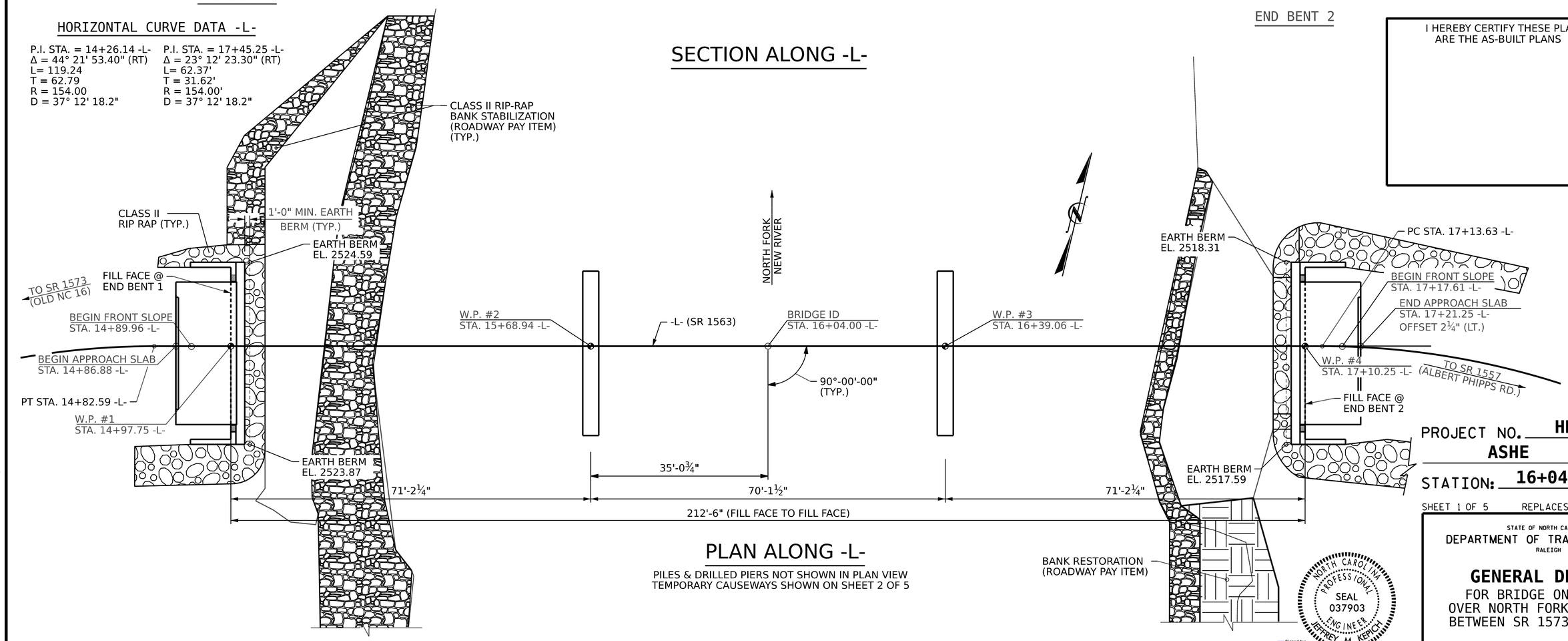

PLAN ALONG -L-

PILES & DRILLED PIERS NOT SHOWN IN PLAN VIEW
TEMPORARY CAUSEWAYS SHOWN ON SHEET 2 OF 5

PROJECT NO. HB-0050
ASHE COUNTY
STATION: 16+04.00 -L-

SHEET 1 OF 5 REPLACES BRIDGE NO. 040463

STATE OF NORTH CAROLINA
DEPARTMENT OF TRANSPORTATION
RALEIGH

GENERAL DRAWING

FOR BRIDGE ON SR 1563
OVER NORTH FORK NEW RIVER
BETWEEN SR 1573 & SR 1557

NORTH CAROLINA PROFESSIONAL SEAL 037903 ENGINEER JEFFREY M KEPICH

Signed by: Jeffrey Kepich 7C5C71DBEF914E3... 6/12/2026

ms consultants, inc.
5444 Wade Park Blvd.
Suite 160
Raleigh, NC 27607
NC License Number : C-3239

DOCUMENT NOT CONSIDERED FINAL UNLESS ALL SIGNATURES COMPLETED

REVISIONS							
NO.	BY:	DATE:	NO.	BY:	DATE:	SHEET NO.	
1			3			S1-01	
2			4			TOTAL SHEETS	26

DRAWN BY : J. KEPICH DATE : 07/25
CHECKED BY : J. PAPCIAK DATE : 09/25
DESIGN ENGINEER OF RECORD: J. KEPICH DATE : 02/26

6/12/2026
c:\workdir\ncdot-pw.bentley.com_ncdot-pw-01\jeffrey kepich\d0529513\400_001_HB0050_SMU_GD_S1-01_040463.dgn
jkepich

Docusign Envelope ID: 1744488F-FDFB-8A99-8142-3188EE09531A

8/26/21

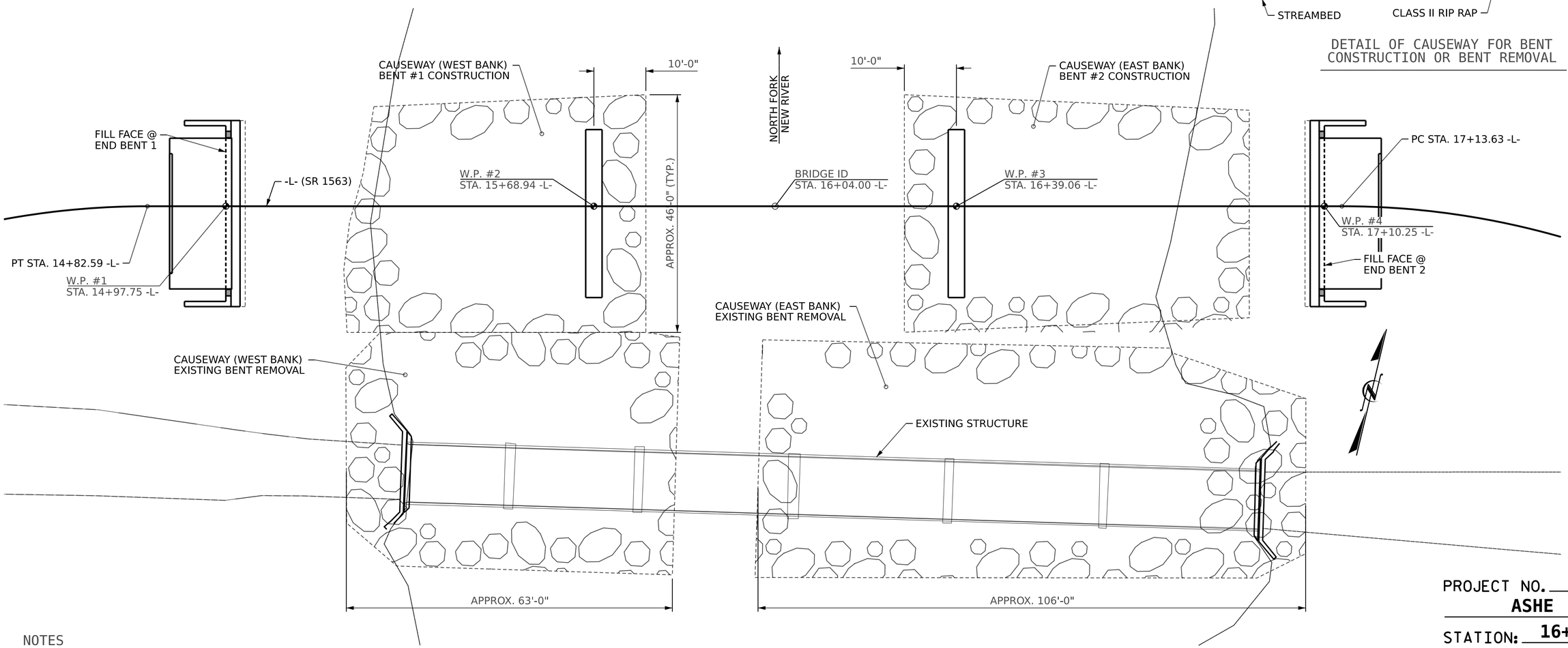

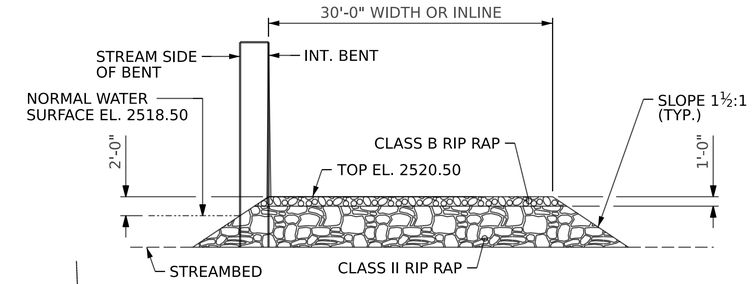

DETAIL OF CAUSEWAY FOR BENT CONSTRUCTION OR BENT REMOVAL

NOTES

PROPOSED STRUCTURE

CAUSEWAYS FOR THE NEW BRIDGE CONSTRUCTION WILL ONLY BE IN THE RIVER ONE AT A TIME, TO ENSURE NO MORE THAN 50% OF THE RIVER CHANNEL IS BLOCKED.

EXISTING STRUCTURE

IN ORDER TO SURROUND AND REMOVE BENT #3 OF THE EXISTING BRIDGE, A CAUSEWAY BLOCKING 64% OF THE RIVER AREA (AT NORMAL FLOW) WILL BE REQUIRED.

HOWEVER, IF THE CONTRACTOR IS ALLOWED TO TRACK INTO THE RIVER WITH CLEAN EQUIPMENT, FREE OF ANY FUEL OR HYDRAULIC LEAKS, THE CONTRACTOR CAN REMOVE THE EXISTING BRIDGE WITHIN 1-2 DAYS WITHOUT A CAUSEWAY.

TEMPORARY CAUSEWAY PLAN

PROJECT NO. HB-0050
ASHE COUNTY
STATION: 16+04.00 -L-

SHEET 2 OF 5 REPLACES BRIDGE NO. 040463

STATE OF NORTH CAROLINA
DEPARTMENT OF TRANSPORTATION
RALEIGH

TEMPORARY CAUSEWAY PLAN

NORTH CAROLINA PROFESSIONAL SEAL 037903 ENGINEER JEFFREY M KEPICH

Signed by: Jeffrey Kepich 7C5C71DBEF914E3... 6/12/2026

ms consultants, inc.
5444 Wade Park Blvd.
Suite 160
Raleigh, NC 27607
NC License Number : C-3239

DOCUMENT NOT CONSIDERED FINAL UNLESS ALL SIGNATURES COMPLETED

REVISIONS						SHEET NO.
NO.	BY:	DATE:	NO.	BY:	DATE:	S1-02
1			3			TOTAL SHEETS
2			4			26

DRAWN BY :	J. KEPICH	DATE :	07/25
CHECKED BY :	J. PAPCIAK	DATE :	04/26
DESIGN ENGINEER OF RECORD:	J. KEPICH	DATE :	04/26

6/12/2026
c:\workdir\ncdot-pw.bentley.com_ncdot-pw-01\jeffrey kepich\d0529513\400_003_HB0050_SMU_TA_S1-02_040463.dgn
jkepich

Docusign Envelope ID: 1744488F-FDFB-8A99-8142-3188EE09531A

8/26/21

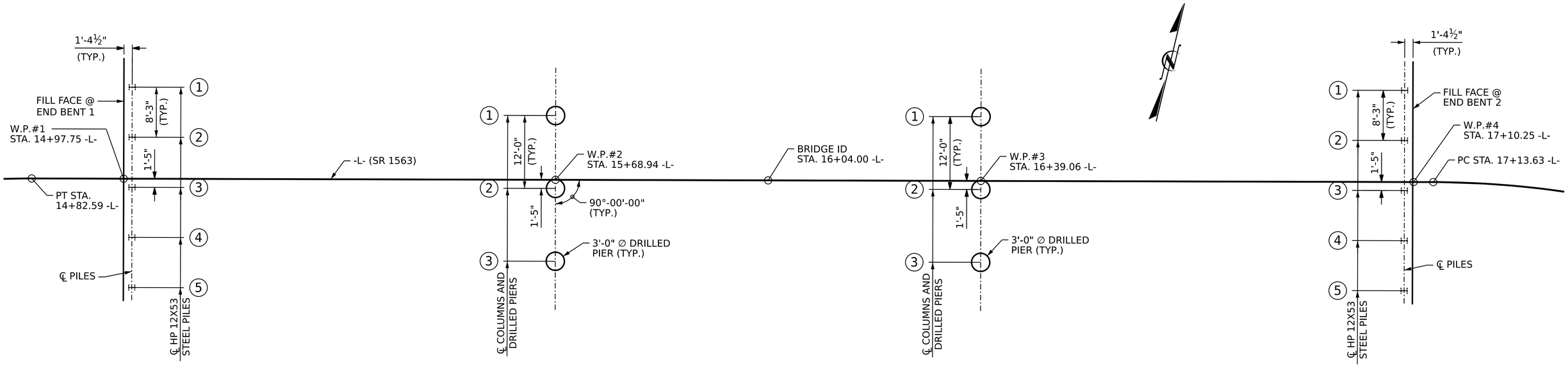

FOUNDATION LAYOUT

NOTES

FOR PILES, SEE SECTION 450 OF THE STANDARD SPECIFICATIONS.

FOR DRILLED PIERS, SEE SECTION 411 OF THE STANDARD SPECIFICATIONS.

PILE EXCAVATION FOR END BENTS 1 AND 2 WILL EXTEND A MINIMUM OF 10 FT BELOW BOTTOM OF CAP OR 5 FT INTO WEATHERED ROCK AND/OR ROCK, WHICHEVER IS DEEPER. ROCK IS DEFINED BY SECTION 411 OF THE STANDARD SPECIFICATIONS.

FILL HOLES FOR PILE EXCAVATION AT END BENTS 1 AND 2 WITH CONCRETE.

PROJECT NO. HB-0050
ASHE COUNTY
STATION: 16+04.00 -L-

SHEET 3 OF 5

STATE OF NORTH CAROLINA
DEPARTMENT OF TRANSPORTATION
RALEIGH

FOUNDATION LAYOUT

NORTH CAROLINA PROFESSIONAL SEAL 037903 ENGINEER JEFFREY M. KEPICH

Signed by: Jeffrey Kepich 7C5C71DBEF914E3... 6/12/2026

ms consultants, inc.
5444 Wade Park Blvd.
Suite 160
Raleigh, NC 27607
NC License Number : C-3239

DOCUMENT NOT CONSIDERED FINAL UNLESS ALL SIGNATURES COMPLETED

REVISIONS								SHEET NO.
NO.	BY:	DATE:	NO.	BY:	DATE:			S1-03
1			3					TOTAL SHEETS
2			4					26

DRAWN BY : J. KEPICH DATE : 07/25
CHECKED BY : J. PAPCIAK DATE : 09/25
DESIGN ENGINEER OF RECORD: J. KEPICH DATE : 02/26

6/12/2026
c:\workdir\ncdot-pw.bentley.com_ncdot-pw-01\jeffrey kepich\d0529513\400_005_HB0050_SMU_FL_S1-03_040463.dgn
jkepich

Docusign Envelope ID: 1744488F-FDFB-8A99-8142-3188EE09531A

8/26/21

SUMMARY OF PILE INFORMATION/INSTALLATION

(Blank entries indicate item is not applicable to structure)

End Bent / Bent No, Pile(s) #(-#) (e.g., "Bent 1, Piles 1-5")	Number of Piles per Line	Factored Resistance per Pile KIPS	Pile Cut-Off (Top of Pile) Elevation FT	Estimated Pile Length per Pile FT	Scour Critical Elevation FT	Driven Piles			Predrilling for Piles **			Drilled-In Piles		
						Minimum Pile Tip (Tip No Higher Than) Elevation FT	Required Driving Resistance (RDR)* per pile KIPS	Pile Redrives Quantity EACH	Predrilling Length per Pile LIN FT	Predrilling Elevation (Elevation Not To Predrill Below) FT	Maximum Predrilling Diameter INCHES	Pile Excavation (Bottom of Hole) Elevation FT	Pile Excavation Not In Soil per Pile LIN FT	Pile Excavation In Soil per Pile LIN FT
End Bent No. 1	5	194		20			325					2509.0	5	11.2
End Bent No. 2 (Piles 1-3)	3	194		20			325					2504.5	5	9.3
End Bent No. 2 (Piles 4-5)	2	194		15			325					2506.5	5	7.5
TOTAL QUANTITY:													50	98.9

$$^{*}RDR = \frac{Factored\ Resistance + Factored\ Drag\ Load + Factored\ Dead\ Load}{Dynamic\ Resistance\ Factor} + Nominal\ Drag\ Load\ Resistance + Nominal\ Resistance\ from\ Scourable\ Material$$

** Predrilling for Piles is required for end bents/bents with a predrilling length and at the Contractor's option for end bents/bents with predrilling information but no predrilling length.

PILE DESIGN INFORMATION

(Blank entries indicate item is not applicable to structure)

End Bent / Bent No, Pile(s) #(-#) (e.g., "Bent 1, Piles 1-5")	Factored Axial Load per Pile KIPS	Factored Drag Load per Pile KIPS	Factored Dead Load * per Pile KIPS	Dynamic Resistance Factor	Nominal Drag Resistance per Pile KIPS	Nominal Scour Resistance per Pile KIPS
End Bent No. 1	194			0.6		
End Bent No. 2	194			0.6		

* Factored Dead Load is factored weight of pile above the ground line.

SUMMARY OF DRILLED PIER INFORMATION/INSTALLATION

(Blank entries indicate item is not applicable to structure)

End Bent / Bent No, Pier(s) #(-#) (e.g., "Bent 1, Piers 1-3")	Number of Piers per Line	Factored Resistance per Pier KIPS	Required Drilled Pier Tip Elevation FT	Required Tip Resistance per Pier KSF	Scour Critical Elevation FT	Minimum Drilled Pier Penetration Into Rock per Pier LIN FT	Drilled Pier Length* per Pier LIN FT	Drilled Pier Length Not In Soil* per Pier LIN FT	Drilled Pier Length In Soil* per Pier LIN FT	Permanent Steel Casing Required? YES	Permanent Steel Casing Tip Elevation (Elevation Not To Extend Casing Below) FT	Permanent Steel Casing Length** per Pier LIN FT
Bent No. 1	3	800	2498.00	20	2510.00	12	26.5			YES	2510.00	10
Bent No. 2	3	800	2499.00	20	2510.00	9	23			YES	2510.00	10
TOTAL QUANTITY:							148.5					60

* Drilled Pier Length, Drilled Pier Length Not in Soil and Drilled Pier Length in Soil represent estimated drilled pier quantities and are measured and paid for as either "____ Dia. Drilled Piers" or "____ Dia. Drilled Piers Not in Soil" and "____ Dia. Drilled Piers in Soil" in accordance with Article 411-7 of the NCDOT Standard Specifications. For bents with a not in soil pay item, drilled piers through air or water will be paid at the contract unit price for "__Dia. Drilled Piers in Soil."

** Permanent Steel Casing Length equals the difference between the ground line or top of drilled pier elevation, whichever is higher, and the permanent casing tip elevation and is measured and paid for as "Permanent Steel Casing for ____ Dia. Drilled Pier" in accordance with Article 411-7 of the NCDOT Standard Specifications.

SUMMARY OF DRILLED PIER TESTING

(Blank entries indicate item is not applicable to structure)

End Bent / Bent No, Pier(s) #(-#) (e.g., "Bent 1, Piers 1-3")	Standard Penetration Test (SPT) EACH	Crosshole Sonic Logging (CSL) EACH	Thermal Integrity Profiler (TIP) EACH	Shaft Inspection Device (SID) EACH	Pile Integrity Test (PIT) EACH
Bent No. 1		1			
Bent No. 2		1			
TOTAL QUANTITY:		2			

NOTES:

1. The Pile Foundation Tables are based on the bridge substructure design and foundation recommendations sealed by a North Carolina Professional Engineer (Michael H. Stephens, #028893) on 02-10-2026.
2. Total Pile Driving Equipment Setup quantity (not shown in Pile Foundation Tables) equals the number of driven piles, i.e., the number of piles with a Required Driving Resistance.
3. The Engineer may adjust the quantity for DPT Testing, Pipe Pile Plates, Permanent Steel Casing, SPTs, TIPs, CSL Testing, SID Inspections and PITs when necessary.

PROJECT NO. HB-0050

ASHE COUNTY

STATION: 16+04.00 -L-

SHEET 4 OF 5

STATE OF NORTH CAROLINA
DEPARTMENT OF TRANSPORTATION
RALEIGH

FOUNDATION TABLES

NORTH CAROLINA PROFESSIONAL SEAL 037903 ENGINEER JEFFREY M. KEPICH

Signed by: Jeffrey Kepich 7C5C71DBEF914E3... 6/12/2026

ms consultants, inc.
5444 Wade Park Blvd.
Suite 160
Raleigh, NC 27607
NC License Number : C-3239

DOCUMENT NOT CONSIDERED FINAL UNLESS ALL SIGNATURES COMPLETED

REVISIONS						SHEET NO.
NO.	BY:	DATE:	NO.	BY:	DATE:	S1-04
1			3			TOTAL SHEETS
2			4			26

DRAWN BY : J. KEPICH DATE : 07/25
CHECKED BY : J. PAPCIAK DATE : 02/26
DESIGN ENGINEER OF RECORD: J. KEPICH DATE : 02/26

6/12/2026
c:\workdir\ncdot-pw.bentley.com_ncdot-pw-01\jeffrey kepich\d0529513\400_007_HB0050_SMU_FT_S1-04_040463.dgn
jkepich

Docusign Envelope ID: 1744488F-FDFB-8A99-8142-3188EE09531A

8/26/21

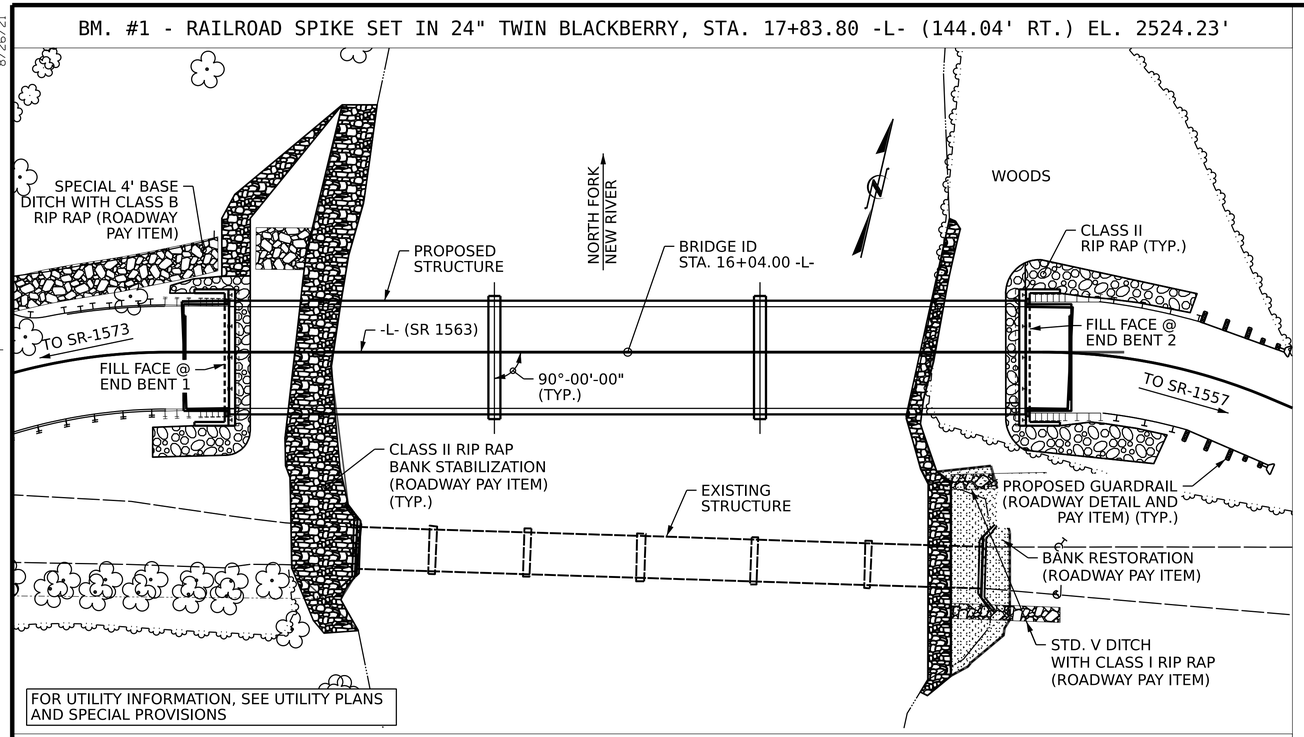

LOCATION SKETCH

NOTES:

ASSUMED LIVE LOAD = HL-93 OR ALTERNATE LOADING.

THIS BRIDGE HAS BEEN DESIGNED IN ACCORDANCE WITH THE AASHTO LRFD BRIDGE DESIGN SPECIFICATIONS.

THIS BRIDGE IS LOCATED IN SEISMIC ZONE 1.

FOR OTHER DESIGN DATA AND GENERAL NOTES, SEE SHEET SN.

FOR SUBMITTAL OR WORKING DRAWINGS, SEE SPECIAL PROVISIONS.

FOR FALSEWORK AND FORMWORK, SEE SPEICAL PROVISIONS.

FOR CRANE SAFETY, SEE SPECIAL PROVISIONS.

FOR GROUT FOR STRUCTURES, SEE SPECIAL PROVISIONS.

THE CONTRACTOR SHALL PROVIDE INDEPENDENT ASSURANCE SAMPLES OF REINFORCING STEEL AS FOLLOWS: FOR PROJECTS UP TO 400 TONS OF REINFORCEMENT STEEL, ONE 30 INCH SAMPLE OF EACH SIZE BAR USED, AND FOR PROJECTS REQUIRING OVER 400 TONS OF REINFORCING STEEL, TWO 30 INCH SAMPLES OF EACH SIZE BAR USED. THE SAMPLE BARS SHOULD COME FROM STEEL ACTUALLY USED IN THE PROJECT AND THE SAMPLES BARS SHOULD BE REPLACED BY SPLICED BARS AS SPECIFIED IN THE SAMPLE BAR REPLACEMENT CHART. PAYMENT FOR THE SAMPLE BARS AND REPLACEMENT REINFORCING STEEL SHALL BE CONSIDERED INCIDENTAL TO VARIOUS PAY ITEMS.

INASMUCH AS THE PAINT SYSTEM ON THE EXISTING STRUCTURAL STEEL CONTAINS LEAD, THE CONTRACTOR'S ATTENTION IS DIRECTED TO ARTICLE 107-1 OF THE STANDARD SPECIFICATIONS. ANY COSTS RESULTING FROM COMPLIANCE WITH APPLICABLE STATE OR FEDERAL REGULATIONS PERTAINING TO HANDLING OF MATERIALS CONTAINING LEAD BASED PAINT SHALL BE INCLUDED IN THE BID PRICE FOR "REMOVAL OF EXISTING STRUCTURE AT STATION 16+04.00 -L-."

AT THE CONTRACTOR'S OPTION, AND UPON REMOVAL OF THE CAUSEWAY, THE CLASS II RIP RAP USED MAY BE PLACED AS RIP RAP SLOPE PROTECTION. SEE SPECIAL PROVISIONS FOR CONSTRUCTION, MAINTENANCE AND REMOVAL OF TEMPORARY ACCESS AT STATION 16+04.00 -L-.

THE MATERIAL SHOWN IN THE CROSS-HATCHED AREA SHALL BE EXCAVATED FOR A DISTANCE UP TO 65 FT ON THE NORTH SIDE AND 35 FT ON THE SOUTH SIDE OF CENTERLINE ROADWAY AS DIRECTED BY THE ENGINEER. THIS WORK WILL BE PAID FOR AT THE CONTRACT LUMP SUM PRICE FOR UNCLASSIFIED STRUCTURE EXCAVATION. SEE SECTION 412 OF THE STANDARD SPECIFICATIONS.

AFTER SERVING AS A TEMPORARY STRUCTURE THE EXISTING STRUCTURE CONSISTING OF SIX SIMPLE SPANS (20'-0" MIN. TO 30'-0" MAX) OF STEEL I-BEAMS WITH A CLEAR ROADWAY WIDTH OF 11'-0" ON A TIMBER FLOOR ON REINFORCED CONCRETE SUBSTRUCTURES LOCATED 30'-0" UPSTREAM FROM PROPOSED STRUCTURE SHALL BE REMOVED. THE EXISTING BRIDGE IS PRESENTLY POSTED FOR LOAD LIMIT. SHOULD THE STRUCTURAL INTEGRITY OF THE BRIDGE DETERIORATE DURING CONSTRUCTION OF THE PROPOSED BRIDGE, A LOAD LIMIT MAY BE POSTED AND MAY BE REDUCED AS FOUND NECESSARY DURING THE LIFE OF THE PROJECT.

THE SUBSTRUCTURE OF THE EXISTING BRIDGE INDICATED ON THE PLANS IS FROM THE BEST INFORMATION AVAILABLE. SINCE THIS INFORMATION IS SHOWN FOR THE CONVENIENCE OF THE CONTRACTOR, THE CONTRACTOR SHALL HAVE NO CLAIM WHATSOEVER AGAINST THE DEPARTMENT OF TRANSPORTATION FOR ANY DELAYS OR ADDITIONAL COST INCURRED BASED ON DIFFERENCES BETWEEN THE EXISTING BRIDGE SUBSTRUCTURE SHOWN ON THE PLANS AND THE ACTUAL CONDITIONS AT THE PROJECT SITE.

REMOVAL OF THE EXISTING BRIDGE SHALL BE PERFORMED IN A MANNER THAT PREVENTS DEBRIS FROM FALLING INTO THE WATER. THE CONTRACTOR SHALL SUBMIT DEMOLITION PLANS FOR REVIEW AND REMOVE THE BRIDGE IN ACCORDANCE WITH ARTICLE 402-2 OF THE STANDARD SPECIFICATIONS.

THIS STRUCTURE HAS BEEN DESIGNED IN ACCORDANCE WITH ``HEC 18-EVALUATING SCOUR AT BRIDGES.''

FOR EROSION CONTROL MEASURES, SEE EROSION CONTROL PLANS.

FOR ASBESTOS ASSESSMENT FOR BRIDGE DEMOLITION AND RENOVATION ACTIVITIES, SEE SPECIAL PROVISIONS.

THE SCOUR CRITICAL ELEVATION FOR BENT NO. 1 AND 2 IS ELEVATION 2510.00. SCOUR CRITICAL ELEVATIONS ARE USED TO MONITOR SCOUR PROBLEMS DURING THE LIFE OF THE STRUCTURE.

FOR CONCRETE WATERPROOFING MEMBRANE - CONCRETE WEARING SURFACE, SEE SPECIAL PROVISIONS.

TOTAL BILL OF MATERIAL

	CONSTRUCTION, MAINTENANCE, & REMOVAL OF TEMP. ACCESS AT STA. 16+04.00 -L-	REMOVAL OF EXISTING STRUCTURE AT STA. 16+04.00 -L-	ASBESTOS ASSESSMENT	PILE EXCAVATION IN SOIL	PILE EXCAVATION NOT IN SOIL	3'-0" DIA. DRILLED PIERS	PERMANENT STEEL CASING FOR 3'-0" DIA. DRILLED PIER	CSL TESTING	UNCLASSIFIED STRUCTURE EXCAVATION AT STATION 16+04.00 -L-	CONCRETE WEARING SURFACE	GROOVING BRIDGE FLOORS	CLASS A CONCRETE	BRIDGE APPROACH SLABS AT STATION 16+04.00 -L-	REINFORCING STEEL	SPIRAL COLUMN REINFORCING STEEL	PILE DRIVING EQUIPMENT SETUP FOR HP12X53 STEEL PILES	HP 12 X 53 STEEL PILES		32" ALASKA RAIL	RIP RAP CLASS II (2'-0" THICK)	GEOTEXTILE FOR DRAINAGE	ELASTOMERIC BEARINGS	3'-0" X 2'-0" PRESTRESSED CONCRETE CORED SLABS		CONCRETE WATERPROOFING MEMBRANE - CONCRETE WEARING SURFACE
	LUMP SUM	LUMP SUM	LUMP SUM	LIN. FT.	LIN. FT.	LIN. FT.	LIN. FT.	EA.	LUMP SUM	SQ. FT.	SQ. FT.	CU. YDS.	LUMP SUM	LBS.	LBS.	EA.	NO.	LIN.FT.	LIN.FT.	TONS	SQ. YD.	LUMP SUM	NO.	LIN.FT.	SQ. FT.
SUPERSTRUCTURE										5642	5362								405.50				30	2100	5642
END BENT NO. 1				56.00	25.00							20.20		2436		5	5	100.00							
BENT NO. 1						79.50	30.00	1.00				13.30		7824	1462					49.00	54.00				
BENT NO. 2						69.00	30.00	1.00				13.30		7399	1294					93.00	103.00				
END BENT NO. 2				42.90	25.00							20.20		2436		5	5	90.00							
TOTAL	LUMP SUM	LUMP SUM	LUMP SUM	98.90	50.00	148.50	60.00	2.00	LUMP SUM	5642	5362	67.00	LUMP SUM	20095	2756	10	10	190.00	405.50	142.00	157.00	LUMP SUM	30	2100	5642

HYDRAULIC DATA

DESIGN DISCHARGE	= 7400 C.F.S
FREQUENCY OF DESIGN DISCHARGE	= -2 YEARS*
DESIGN HIGH WATER ELEVATION	= 2524.90'
DRAINAGE AREA	= 280 SQ. MI.
BASE DISCHARGE (Q100)	= 35900 C.F.S.
BASE HIGH WATER ELEVATION	= 2535.50'

*DESIGN MAINTAINS OR IMPROVES EXISTING LEVEL OF SERVICE

OVERTOPPING FLOOD DATA

OVERTOPPING DISCHARGE	= 7400 C.F.S.
FREQUENCY OF OVERTOPPING FLOOD	= -2 YEARS
OVERTOPPING FLOOD ELEVATION	= 2524.70'**

**SAG POINT AT STA. 17+74.68 -L- (LT. SHOULDER)

SAMPLE BAR REPLACEMENT

SIZE	LENGTH
#3	6'-2"
#4	7'-4"
#5	8'-6"
#6	9'-8"
#7	10'-10"
#8	12'-0"
#9	13'-2"
#10	14'-6"
#11	15'-10"

PROJECT NO. HB-0050
ASHE COUNTY
STATION: 16+04.00 -L-

SHEET 5 OF 5

STATE OF NORTH CAROLINA
DEPARTMENT OF TRANSPORTATION
RALEIGH

GENERAL DRAWING
FOR BRIDGE ON SR 1563
OVER NORTH FORK NEW RIVER
BETWEEN SR 1573 & SR 1557

NORTH CAROLINA PROFESSIONAL SEAL 037903 ENGINEER JEFFREY M KEPICH

Signed by: Jeffrey Kepich 7C5C71DBEF914E3... 6/12/2026

ms consultants, inc.
5444 Wade Park Blvd.
Suite 160
Raleigh, NC 27607
NC License Number : C-3239

DOCUMENT NOT CONSIDERED FINAL UNLESS ALL SIGNATURES COMPLETED

REVISIONS								SHEET NO.
NO.	BY:	DATE:	NO.	BY:	DATE:			S1-05
1			3					TOTAL SHEETS
2			4					26

DRAWN BY : J. KEPICH DATE : 07/25
CHECKED BY : J. PAPCIAK DATE : 02/26
DESIGN ENGINEER OF RECORD: J. KEPICH DATE : 07/25

6/12/2026
c:\workdir\ncdot-pw.bentley.com_ncdot-pw-01\jeffrey kepich\d0529513\400_009_HB0050_SMU_BM_S1-05_040463.dgn
jkepich

Docusign Envelope ID: 1744488F-FDFB-8A99-8142-3188EE09531A

8/26/21

LOAD AND RESISTANCE FACTOR RATING (LRFR) SUMMARY FOR PRESTRESSED CONCRETE GIRDERS

LOAD TYPE		VEHICLE	WEIGHT (W) (TONS)	CONTROLLING LOAD RATING (#)	MINIMUM RATING FACTORS (RF)	TONS = W x RF	STRENGTH I LIMIT STATE											SERVICE III LIMIT STATE						COMMENT NUMBER
								MOMENT					SHEAR						MOMENT					
							LIVE-LOAD FACTORS (γ LL)	DISTRIBUTION FACTORS (DF)	RATING FACTOR	SPAN	GIRDER LOCATION	DISTANCE FROM LEFT END OF SPAN (ft)	DISTRIBUTION FACTORS (DF)	RATING FACTOR	SPAN	GIRDER LOCATION	DISTANCE FROM LEFT END OF SPAN (ft)	LIVE-LOAD FACTORS (γ LL)	DISTRIBUTION FACTORS (DF)	RATING FACTOR	SPAN	GIRDER LOCATION	DISTANCE FROM LEFT END OF SPAN (ft)	
DESIGN LOAD		HL-93 (INVENTORY)	N/A	1	1.230	--	1.75	0.23	1.230	70'	E	34.50	0.51	1.390	70'	E	6.50	0.80	0.23	1.770	70'	E	34.50	
		HL-93 (OPERATING)	N/A		1.600	--	1.35	0.23	1.600	70'	E	34.50	0.51	1.840	70'	E	6.50	N/A	--	--	--	--	--	
		HS-20 (INVENTORY)	36.000	2	1.598	57.53	1.75	0.23	1.598	70'	E	34.50	0.51	1.760	70'	E	6.50	0.80	0.23	2.300	70'	E	34.50	
		HS-20 (OPERATING)	36.000		2.071	74.57	1.35	0.23	2.071	70'	E	34.50	0.51	2.320	70'	E	6.50	N/A	--	--	--	--	--	
LEGAL LOAD	SINGLE VEHICLE (SV)	SNSH	13.500		4.461	60.22	1.40	0.23	4.461	70'	E	34.50	0.51	5.460	70'	E	6.50	0.80	0.23	5.140	70'	E	34.50	
		SNGARBS2	20.000		3.345	66.90	1.40	0.23	3.345	70'	E	34.50	0.51	3.850	70'	E	6.50	0.80	0.23	3.850	70'	E	34.50	
		SNAGRIS2	22.000		3.176	69.88	1.40	0.23	3.176	70'	E	34.50	0.51	3.570	70'	E	6.50	0.80	0.23	3.660	70'	E	34.50	
		SNCOTTS3	27.250		2.221	60.51	1.40	0.23	2.221	70'	E	34.50	0.51	2.660	70'	E	6.50	0.80	0.23	2.560	70'	E	34.50	
		SNAGGRS4	34.925		1.863	65.08	1.40	0.23	1.863	70'	E	34.50	0.51	2.190	70'	E	6.50	0.80	0.23	2.150	70'	E	34.50	
		SNS5A	35.550		1.822	64.76	1.40	0.23	1.822	70'	E	34.50	0.51	2.220	70'	E	6.50	0.80	0.23	2.100	70'	E	34.50	
		SNS6A	39.950		1.675	66.90	1.40	0.23	1.675	70'	E	34.50	0.51	2.020	70'	E	6.50	0.80	0.23	1.930	70'	E	34.50	
		SNS7B	42.000		1.595	66.99	1.40	0.23	1.595	70'	E	34.50	0.51	1.990	70'	E	6.50	0.80	0.23	1.840	70'	E	34.50	
	TRUCK TRACTOR SEMI-TRAILER (TTST)	TNAGRIT3	33.000		2.043	67.42	1.40	0.23	2.043	70'	E	34.50	0.51	2.430	70'	E	6.50	0.80	0.23	2.350	70'	E	34.50	
		TNT4A	33.075		2.053	67.90	1.40	0.23	2.053	70'	E	34.50	0.51	2.360	70'	E	6.50	0.80	0.23	2.360	70'	E	34.50	
		TNT6A	41.600		1.682	69.96	1.40	0.23	1.682	70'	E	34.50	0.51	2.130	70'	E	6.50	0.80	0.23	1.940	70'	E	34.50	
		TNT7A	42.000		1.692	71.06	1.40	0.23	1.692	70'	E	34.50	0.51	2.080	70'	E	6.50	0.80	0.23	1.950	70'	E	34.50	
		TNT7B	42.000		1.754	73.68	1.40	0.23	1.754	70'	E	34.50	0.51	1.930	70'	E	6.50	0.80	0.23	2.020	70'	E	34.50	
		TNAGRIT4	43.000		1.666	71.63	1.40	0.23	1.666	70'	E	34.50	0.51	1.870	70'	E	6.50	0.80	0.23	1.920	70'	E	34.50	
		TNAGT5A	45.000		1.569	70.62	1.40	0.23	1.569	70'	E	34.50	0.51	1.860	70'	E	6.50	0.80	0.23	1.810	70'	E	34.50	
		TNAGT5B	45.000	3	1.549	69.71	1.40	0.23	1.549	70'	E	34.50	0.51	1.770	70'	E	6.50	0.80	0.23	1.780	70'	E	34.50	
EMERGENCY VEHICLE (EV)		EV2	28.750		2.549	73.28	1.30	0.23	2.549	70'	E	34.50	0.51	2.880	70'	E	6.50	0.80	0.23	2.720	70'	E	34.50	
		EV3	43.000	4	1.667	71.67	1.30	0.23	1.667	70'	E	34.50	0.51	1.900	70'	E	6.50	0.80	0.23	1.780	70'	E	34.50	

LOAD FACTORS:

DESIGN LOAD RATING FACTORS	LIMIT STATE	γDC	γDW
	STRENGTH I	1.25	1.50
	SERVICE III	1.00	1.00

NOTES:

MINIMUM RATING FACTORS ARE BASED ON THE STRENGTH I AND SERVICE III LIMIT STATES.

ALLOWABLE STRESSES FOR SERVICE III LIMIT STATE ARE AS REQUIRED FOR DESIGN.

COMMENTS:

1.
2.
3.
4.

CONTROLLING LOAD RATING

1 DESIGN LOAD RATING (HL-93)
2 DESIGN LOAD RATING (HS-20)
3 LEGAL LOAD RATING * *
4 EMERGENCY VEHICLE LOAD RATING **
* * SEE CHART FOR VEHICLE TYPE

GIRDER LOCATION

I - INTERIOR GIRDER
E - EXTERIOR GIRDER

1
2
3
4

LRFR SUMMARY

FOR SPANS "A, B & C"

PROJECT NO. HB-0050
ASHE COUNTY
STATION: 16+04.00 -L-

STATE OF NORTH CAROLINA
DEPARTMENT OF TRANSPORTATION
RALEIGH

LRFR SUMMARY FOR 70' CORED SLAB UNIT 90° SKEW

(NON-INTERSTATE TRAFFIC)

NORTH CAROLINA PROFESSIONAL SEAL 037903 ENGINEER JEFFREY M KEPICH

Signed by: Jeffrey Kepich 7C5C71DBEF914E3... 6/12/2026

ms consultants, inc.
5444 Wade Park Blvd.
Suite 160
Raleigh, NC 27607
NC License Number : C-3239

DOCUMENT NOT CONSIDERED FINAL UNLESS ALL SIGNATURES COMPLETED

REVISIONS								SHEET NO.
NO.	BY:	DATE:	NO.	BY:	DATE:			S1-06
1			3					TOTAL SHEETS
2			4					26

DRAWN BY : J. KEPICH DATE : 10/25
CHECKED BY : B. LAWSON DATE : 02/26
DESIGN ENGINEER OF RECORD: J. KEPICH DATE : 05/26

6/12/2026
c:\workdir\ncdot-pw.bentley.com_ncdot-pw-01\jeffrey kepich\d0529513\400_011_HB0050_SMU_LRFR_S1-06_040463.dgn
jkepich

Docusign Envelope ID: 1744488F-FDFB-8A99-8142-3188EE09531A

8/26/21

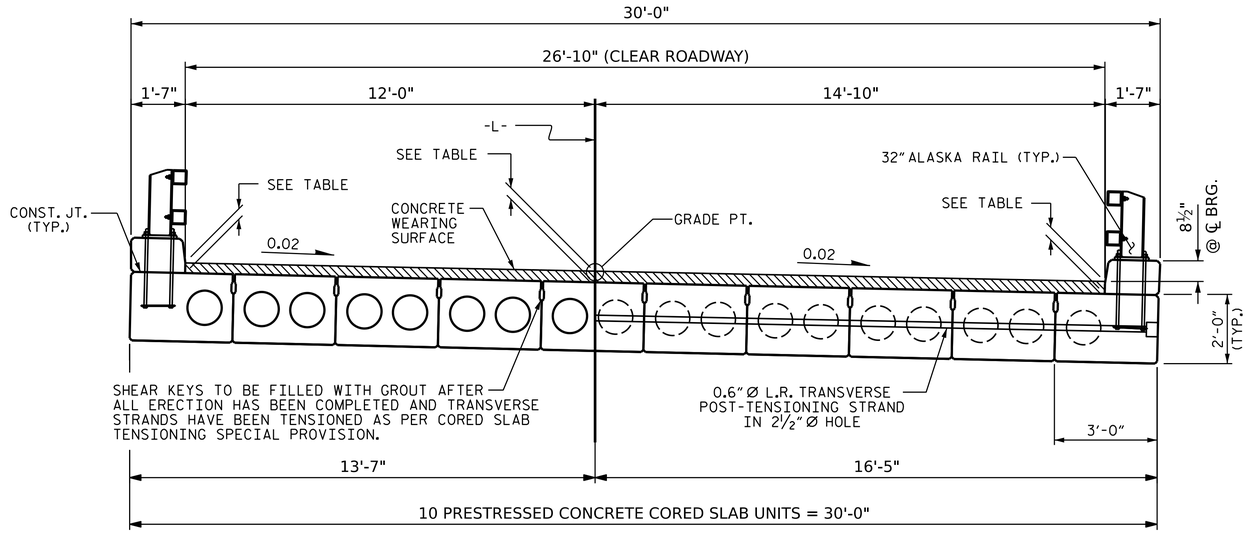

HALF SECTION
THROUGH VOIDS

HALF SECTION
AT INTERMEDIATE DIAPHRAGMS

TYPICAL SECTION

✳ - THE MAXIMUM CURB HEIGHT AND CONCRETE WEARING THICKNESS IS SHOWN. THE HEIGHT OF THE CURB AND CONCRETE WEARING THICKNESS VARIES WHILE THE TOP OF THE CURB FOLLOWS THE PROFILE OF THE GUTTERLINE. FOR CONCRETE WEARING THICKNESS SEE TABLE ON THIS SHEET.

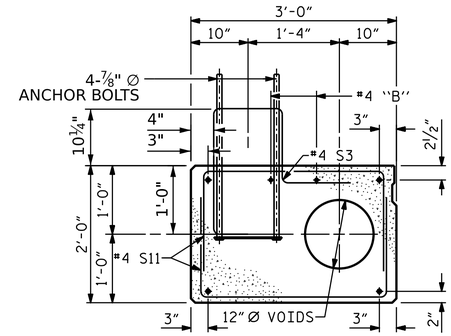

EXTERIOR SLAB SECTION

(FOR PRESTRESSED STRAND LAYOUT, SEE INTERIOR SLAB SECTION.)

CONCRETE WEARING SURFACE DEPTH			
SPAN	AT ℄ BEARINGS		AT MID-SPAN
	DOWNSTATION	UPSTATION	
A	5½"	6"	3¾"
B	5½"	6"	3¾"
C	5½"	5½"	3¾"

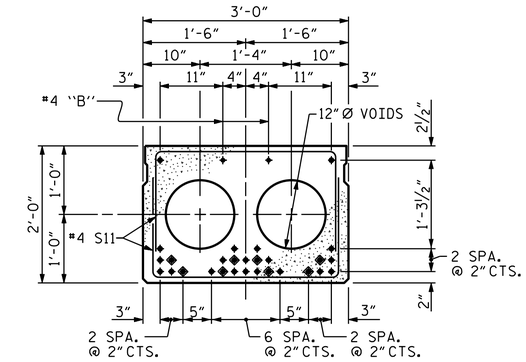

INTERIOR SLAB SECTION (70' UNIT)

(28 STRANDS REQUIRED)

0.6'' Ø LOW RELAXATION STRAND LAYOUT

◈ BOND SHALL BE BROKEN ON THESE STRANDS FOR A DISTANCE OF 12'-0" FROM END OF CORED SLAB UNIT. SEE STANDARD SPECIFICATIONS, ARTICLE 1078-7.

DEBONDING LEGEND

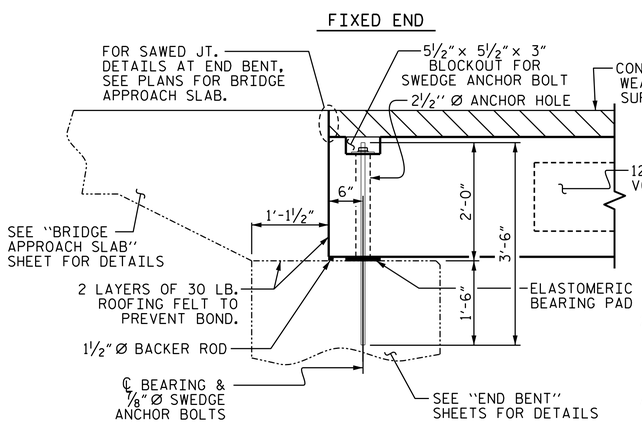

SECTION AT END BENT

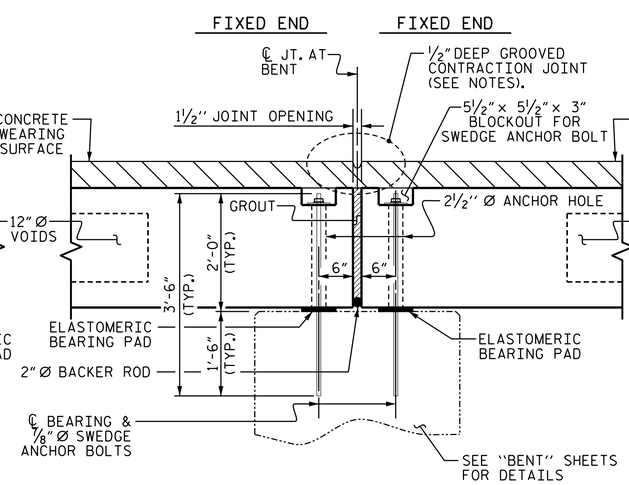

SECTION AT BENT 2

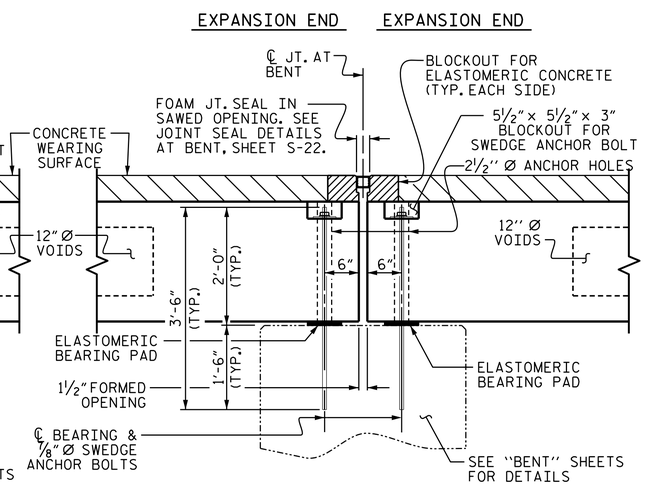

SECTION AT BENT 1

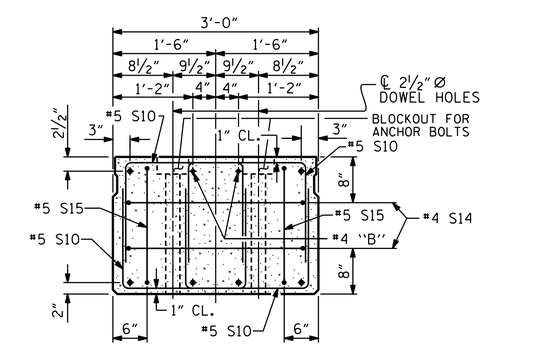

END ELEVATION

SHOWING PLACEMENT OF DOUBLE STIRRUPS AND LOCATION OF DOWEL HOLES. (STRAND LAYOUT NOT SHOWN.) INTERIOR SLAB UNIT SHOWN-EXTERIOR SLAB UNIT SIMILAR EXCEPT SHEAR KEY LOCATION.

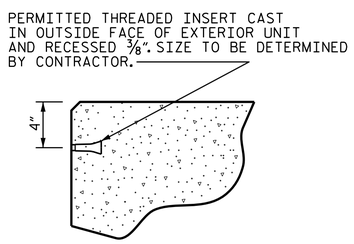

THREADED INSERT DETAIL

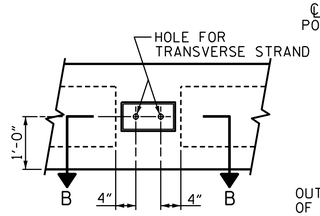

ELEVATION VIEW

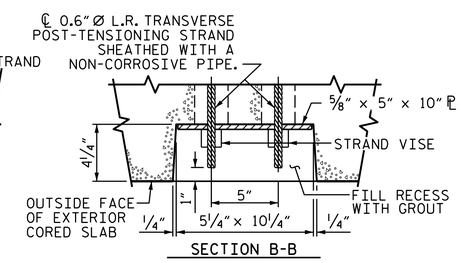

SECTION B-B

GROUTED RECESS AT END OF POST-TENSIONED STRAND CORED SLABS

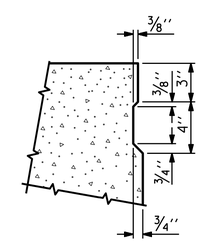

SHEAR KEY DETAIL

NOTE: OMIT SHEAR KEY ON OUTSIDE FACE OF EXTERIOR CORED SLABS.

PROJECT NO. HB-0050
ASHE COUNTY
STATION: 16+04.00 -L-

SHEET 1 OF 4

STATE OF NORTH CAROLINA
DEPARTMENT OF TRANSPORTATION
RALEIGH

STANDARD

3'-0'' X 2'-0'' PRESTRESSED CONCRETE CORED SLAB UNIT

NORTH CAROLINA PROFESSIONAL SEAL 037903 ENGINEER JEFFREY M. KEPICH

Signed by: Jeffrey Kepich 7C5C71DBEF914E3... 6/12/2026

ms consultants, inc.
5444 Wade Park Blvd.
Suite 160
Raleigh, NC 27607
NC License Number : C-3239

DOCUMENT NOT CONSIDERED FINAL UNLESS ALL SIGNATURES COMPLETED

REVISIONS							SHEET NO.
NO.	BY:	DATE:	NO.	BY:	DATE:		S1-07
1			3				TOTAL SHEETS
2			4				26

ASSEMBLED BY:	J. KEPICH	DATE :	07/25
CHECKED BY :	J. PAPCIAK	DATE :	09/25
DRAWN BY :	MAA 6/10	REV. 8/14	MAA/TMG
CHECKED BY :	MKT 7/10		

6/12/2026
c:\workdir\ncdot-pw.bentley.com_ncdot-pw-01\jeffrey kepich\d0529513\400_013_HB0050_SMU_TS_S1-07_040463.dgn
jkepich

Docusign Envelope ID: 1744488F-FDFB-8A99-8142-3188EE09531A

8/26/21

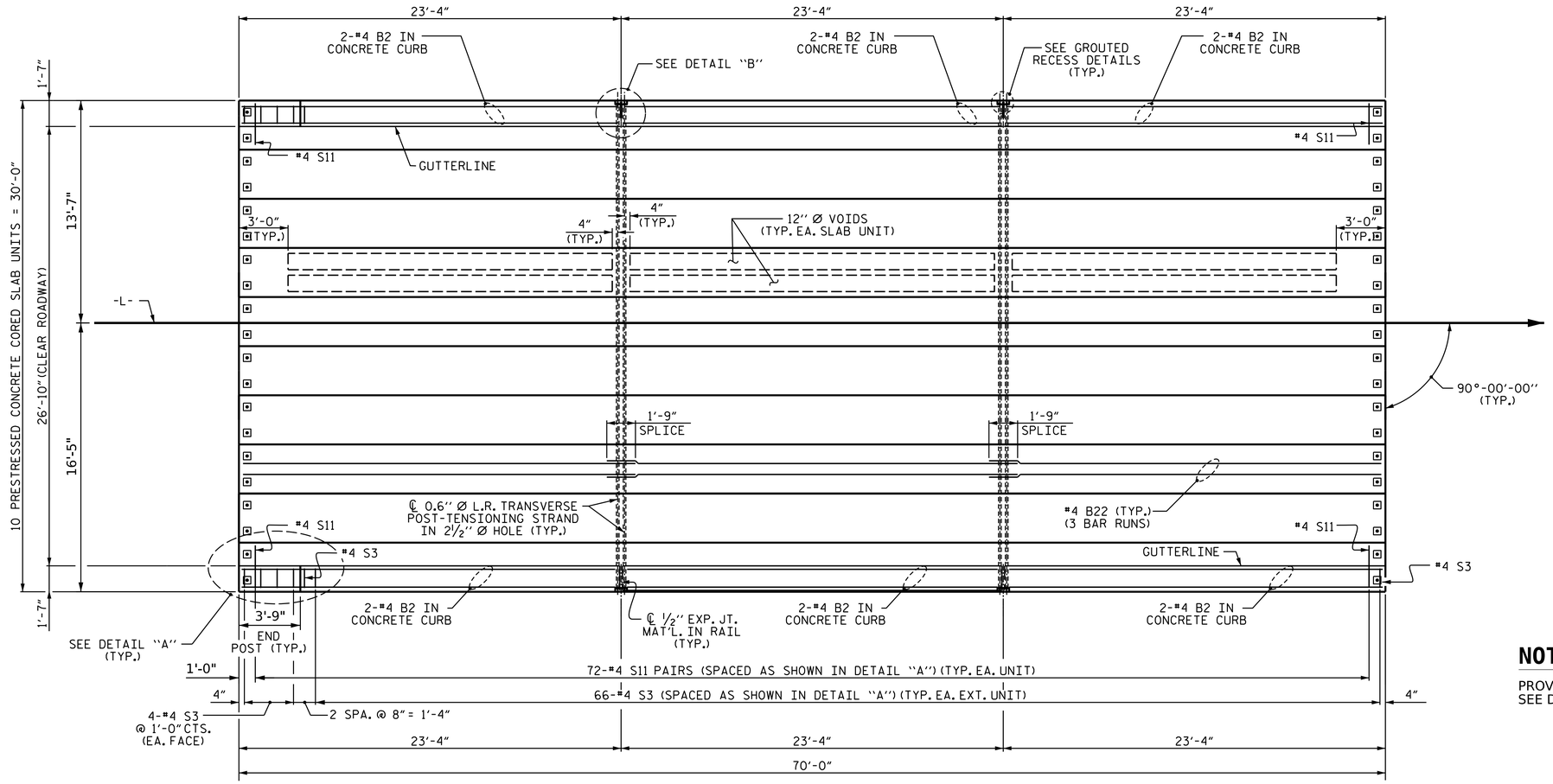

PLAN OF UNIT

(SPAN A SHOWN, SPAN C OPPOSITE)

NOTES

PROVIDE ADDITIONAL #4 S11 BARS AT EACH ALASKA RAIL POST. SEE DETAIL "SIDE VIEW AT POST LOCATION" ON SHEET S1-11.

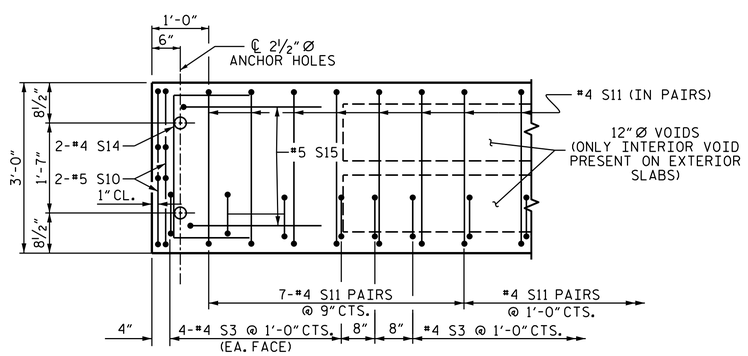

DETAIL "A"

(TYPICAL EACH END OF UNIT)
NOTE: SPAN A NEAR END & SPAN C FAR END EXTERIOR UNIT SHOWN - INTERIOR UNIT SIMILAR EXCEPT OMIT #4 S3 BARS.

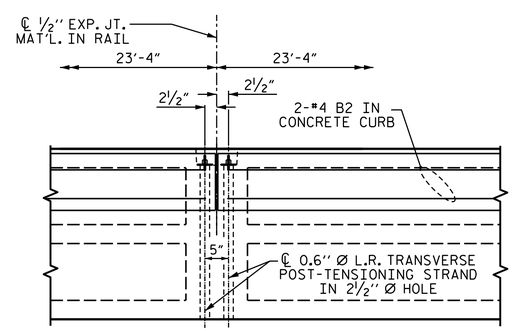

DETAIL "B"

#4 S11 BARS MAY BE SHIFTED AS NECESSARY TO MAINTAIN 1" CLEAR TO GROUTED RECESS AND 2½" Ø TRANSVERSE POST-TENSIONING STRAND HOLES

PROJECT NO. HB-0050
ASHE COUNTY
STATION: 16+04.00 -L-

SHEET 2 OF 4

STATE OF NORTH CAROLINA
DEPARTMENT OF TRANSPORTATION
RALEIGH

SPANS A & C
PLAN OF 70' UNIT
27'-10" CLEAR ROADWAY
90° SKEW

NORTH CAROLINA PROFESSIONAL SEAL 037903 ENGINEER JEFFREY M. KEPICH

Signed by: Jeffrey Kepich 7C5C71DBEF914E3... 6/12/2026

ms consultants, inc.
5444 Wade Park Blvd.
Suite 160
Raleigh, NC 27607
NC License Number : C-3239

DOCUMENT NOT CONSIDERED FINAL UNLESS ALL SIGNATURES COMPLETED

REVISIONS							SHEET NO.
NO.	BY:	DATE:	NO.	BY:	DATE:		S1-08
1			3				TOTAL SHEETS
2			4				26

ASSEMBLED BY:	J. KEPICH		DATE :	07/25	
CHECKED BY :	J. PAPCIAK		DATE :	09/25	
DRAWN BY :	MAA	6/10	REV. 12/5/11	MAA/AAC	
CHECKED BY :	MKT	7/10	REV. 8/14	MAA/TMG	

6/12/2026
c:\workdir\ncdot-pw.bentley.com_ncdot-pw-01\jeffrey kepich\d0529513\400_015_HB0050_SMU_CS_S1-08_040463.dgn
jkepich

STD. NO. 24PCS_30_90S_70L

Docusign Envelope ID: 1744488F-FDFB-8A99-8142-3188EE09531A

8/26/21

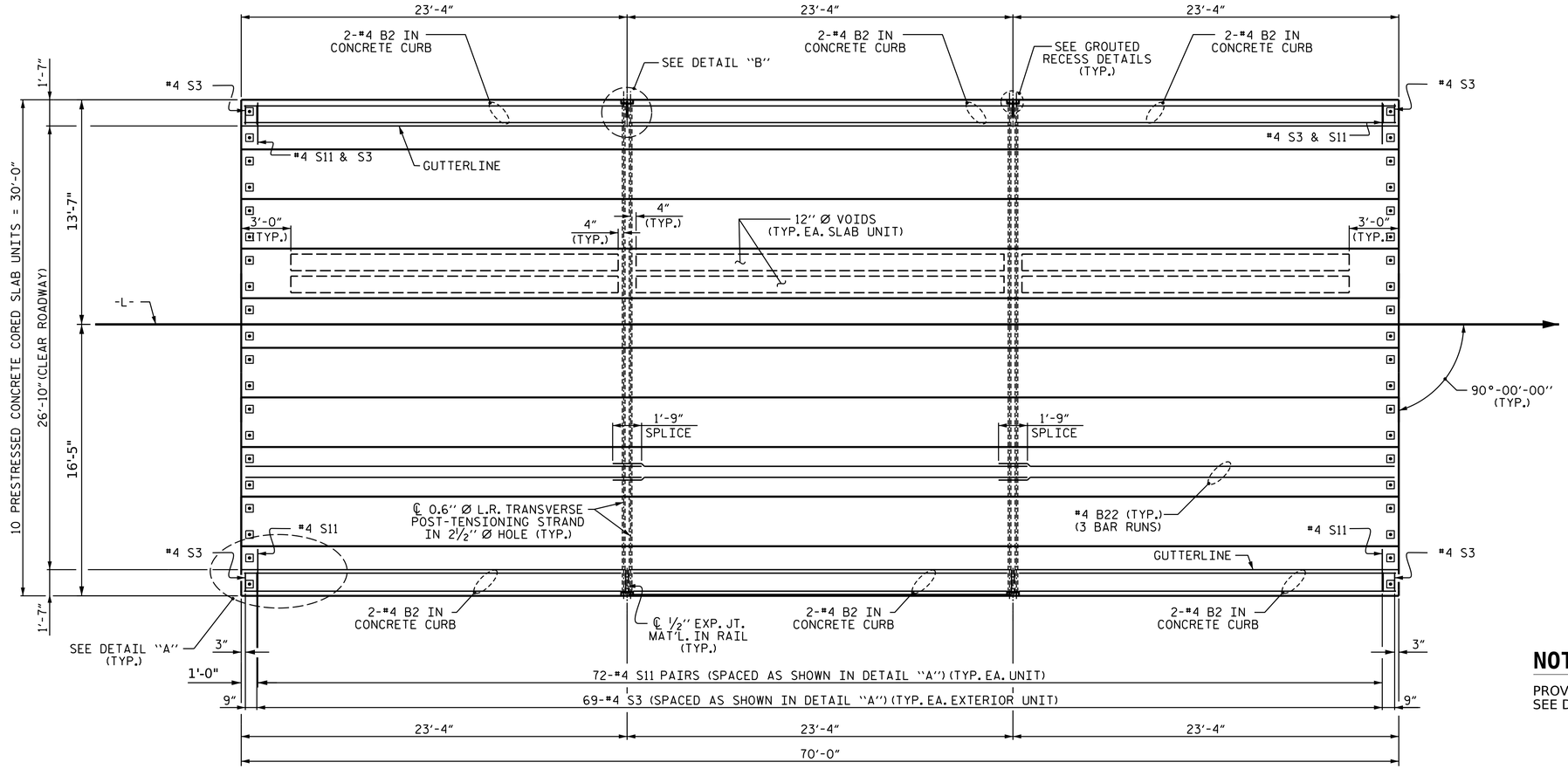

PLAN OF UNIT

(SPAN B)

NOTES

PROVIDE ADDITIONAL #4 S11 BARS AT EACH ALASKA RAIL POST. SEE DETAIL "SIDE VIEW AT POST LOCATION" ON SHEET S1-11.

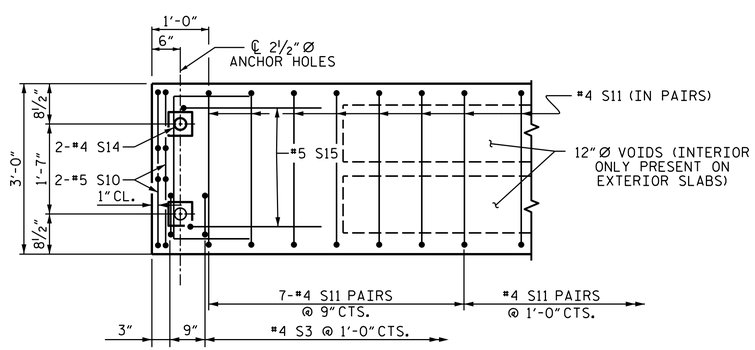

DETAIL "A"

(TYPICAL EACH END OF UNIT)
NOTE: EXTERIOR UNIT SHOWN - INTERIOR UNIT SIMILAR EXCEPT OMIT #4 S3 BARS.

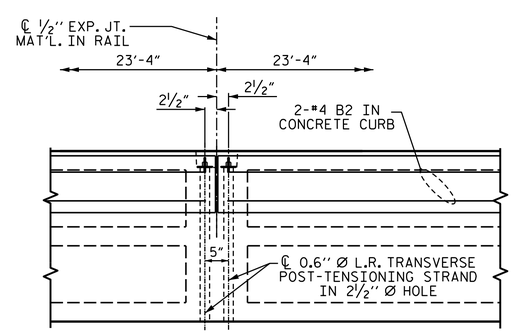

DETAIL "B"

#4 S11 BARS MAY BE SHIFTED AS NECESSARY TO MAINTAIN 1" CLEAR TO GROUTED RECESS AND 2½" Ø TRANSVERSE POST-TENSIONING STRAND HOLES

PROJECT NO. HB-0050
ASHE COUNTY
STATION: 16+04.00 -L-

SHEET 2 OF 4

STATE OF NORTH CAROLINA
DEPARTMENT OF TRANSPORTATION
RALEIGH

SPAN B
PLAN OF 70' UNIT
27'-10" CLEAR ROADWAY
90° SKEW

NORTH CAROLINA PROFESSIONAL SEAL 037903 ENGINEER JEFFREY M. KEPICH

Signed by: Jeffrey Kepich 7C5C71DBEF914E3... 6/12/2026

DOCUMENT NOT CONSIDERED FINAL UNLESS ALL SIGNATURES COMPLETED

ms consultants, inc.
5444 Wade Park Blvd.
Suite 160
Raleigh, NC 27607
NC License Number : C-3239

REVISIONS							SHEET NO.
NO.	BY:	DATE:	NO.	BY:	DATE:		S1-09
1			3				TOTAL SHEETS
2			4				26

ASSEMBLED BY:	J. KEPICH		DATE : 07/25		
CHECKED BY :	J. PAPCIAK		DATE : 09/25		
DRAWN BY :	MAA	6/10	REV. 12/5/11	MAA/AAC	
CHECKED BY :	MKT	7/10	REV. 8/14	MAA/TMG	

6/12/2026
c:\workdir\ncdot-pw.bentley.com_ncdot-pw-01\jeffrey kepich\d0529513\400_017_HB0050_SMU_CS_S1-09_040463.dgn
jkepich

STD. NO. 24PCS_30_90S_70L

Docusign Envelope ID: 1744488F-FDFB-8A99-8142-3188EE09531A

8/26/21

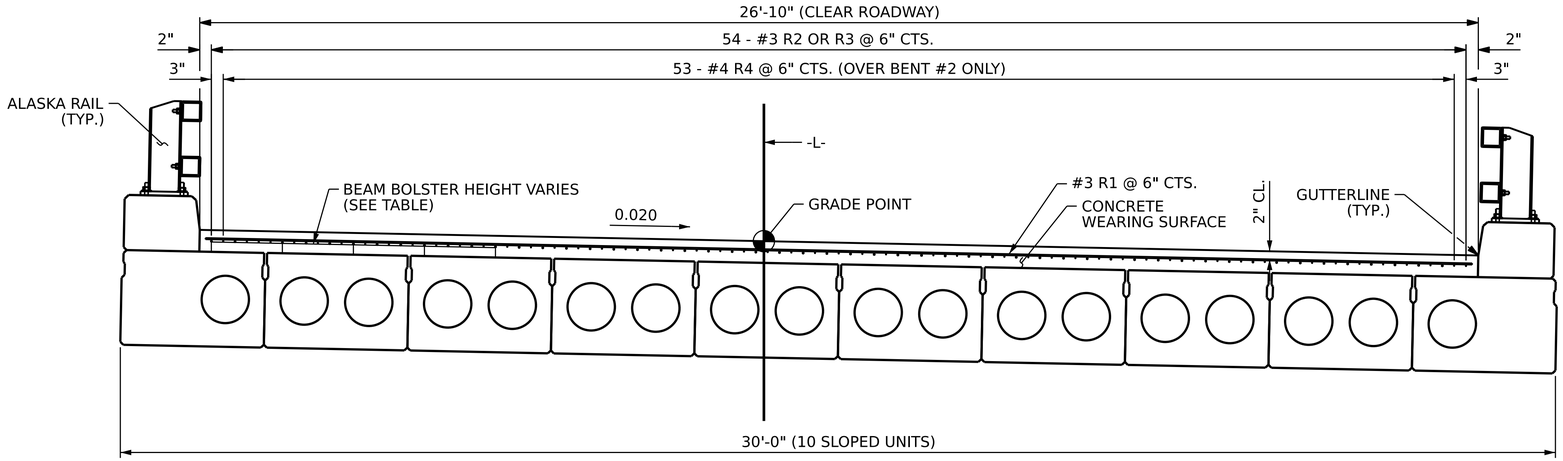

CONCRETE WEARING SURFACE BILL OF MATERIAL					
BAR	NO.	SIZE	TYPE	LENGTH	WEIGHT
*R1	420	#3	STR	26'-6"	4185
*R2	216	#3	STR	36'-0"	2924
*R3	108	#3	STR	35'-6"	1442
*R4	53	#4	STR	20'-0"	708
EPOXY COATED REINF. STEEL =					9258
CONCRETE WEARING SURFACE =					5642 SQ. FT.

BEAM BOLSTER HEIGHT			
SPAN	AT ℄ BEARINGS NEAR	AT ℄ BEARINGS FAR	AT MID-SPAN
A	2½"	3"	¾" **
B	2½"	3"	¾" **
C	2½"	2½"	¾" **

** USE SLAB BOLSTER

SPLICE LENGTH CHART	
BAR SIZE	EPOXY COATED
#3	1'-3"

GROOVING BRIDGE FLOORS		
APPROACH SLABS	533	SQ. FT.
BRIDGE WEARING SURFACE	4829	SQ. FT.
TOTAL	5362	SQ. FT.

REINFORCING STEEL FOR CONCRETE WEARING SURFACE

BEAM AND SLAB BOLSTER HEIGHTS ARE BASED UPON PREDICTED FINAL CAMBER AND THEORETICAL GRADE LINE ELEVATIONS AND VARY BETWEEN ℄ BEARING AND MID-SPAN FOR ALL SPANS

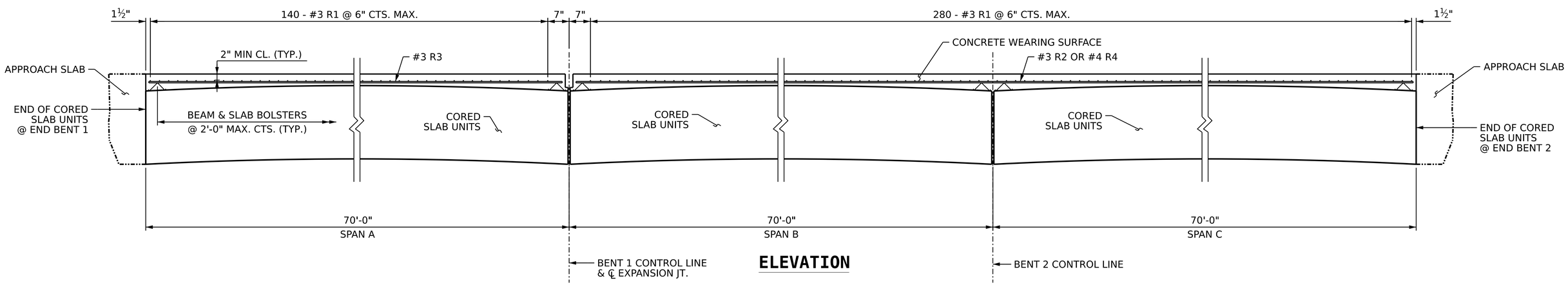

ELEVATION

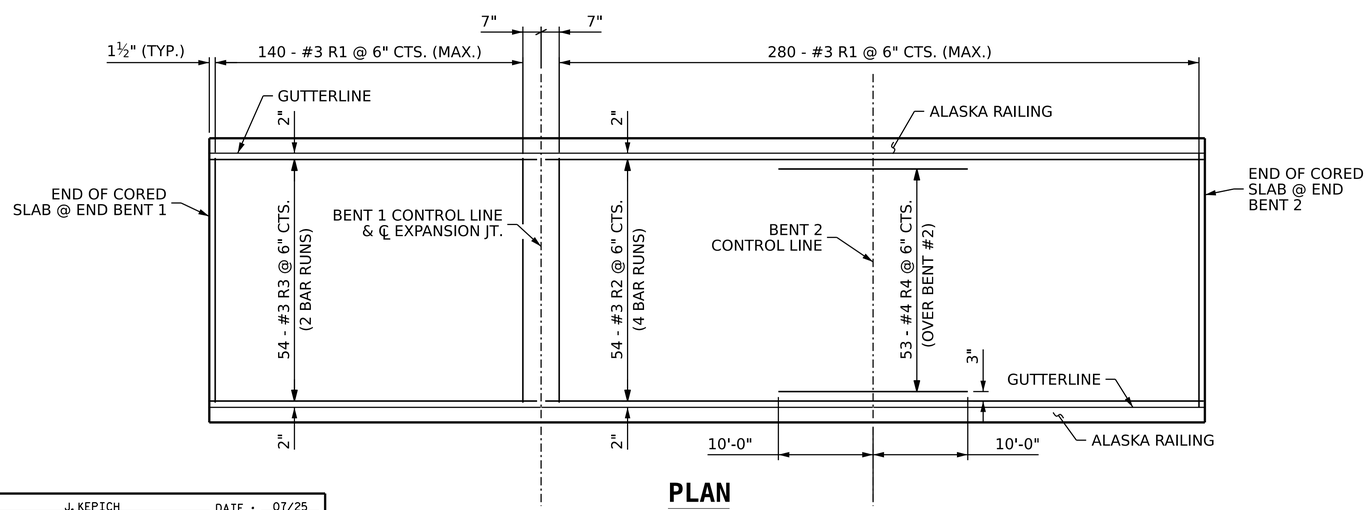

PLAN

NOTES

PLACEMENT OF THE CONCRETE WEARING SURFACE SHALL OCCUR AFTER CASTING THE CONCRETE RAIL. THE COST OF THE #3 BARS CAST WITH THE CONCRETE WEARING SURFACE SHALL BE INCLUDED IN THE UNIT PRICE BID FOR CONCRETE WEARING SURFACE. FOR CONCRETE WEARING SURFACE, SEE SPECIAL PROVISIONS.

ALL REINFORCING STEEL FOR THE CONCRETE WEARING SURFACE SHALL BE EPOXY COATED.

PROVIDE ½" DEEP GROOVED CONTRACTION JOINT AT ℄ BENT 2.

PROJECT NO. HB-0050
ASHE COUNTY
STATION: 16+04.00 -L-

SHEET 3 OF 4

STATE OF NORTH CAROLINA
DEPARTMENT OF TRANSPORTATION
RALEIGH

CONCRETE WEARING SURFACE DETAILS

NORTH CAROLINA PROFESSIONAL SEAL 037903 ENGINEER JEFFREY M KEPICH

Signed by: Jeffrey Kepich 7C5C71DBEF914E3... 6/12/2026

ms consultants, inc.
5444 Wade Park Blvd.
Suite 160
Raleigh, NC 27607
NC License Number : C-3239

DOCUMENT NOT CONSIDERED FINAL UNLESS ALL SIGNATURES COMPLETED

REVISIONS								SHEET NO.
NO.	BY:	DATE:	NO.	BY:	DATE:			S1-10
1			3					TOTAL SHEETS
2			4					26

DRAWN BY :	J. KEPICH	DATE :	07/25
CHECKED BY :	J. PAPCIAK	DATE :	09/25
DESIGN ENGINEER OF RECORD:	J. KEPICH	DATE :	07/25

6/12/2026
c:\workdir\ncdot-pw.bentley.com_ncdot-pw-01\jeffrey kepich\d0529513\400_019_HB0050_SMU_CS_S1-10_040463.dgn
jkepich

Docusign Envelope ID: 1744488F-FDFB-8A99-8142-3188EE09531A

8/26/21

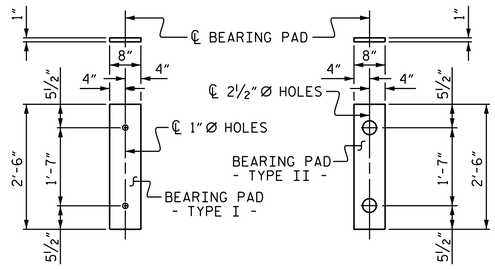

FIXED END
(TYPE I - 40 REQ'D)

EXPANSION END
(TYPE II - 20 REQ'D)

ELASTOMERIC BEARING DETAILS

ELASTOMER IN BEARINGS FOR 24"CSU SHALL BE 60 DUROMETER HARDNESS.

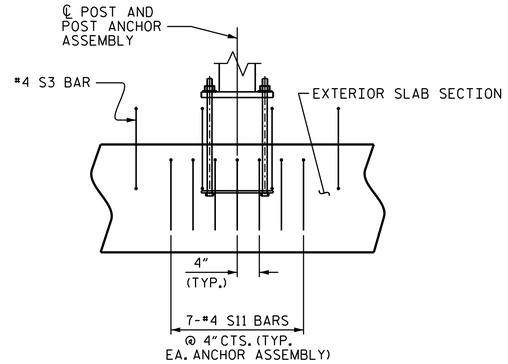

SIDE VIEW AT POST LOCATION

(SHOWING ADDITIONAL S11 BARS AT EACH POST ASSEMBLY)

BILL OF MATERIAL FOR ONE 70' CORED SLAB UNIT SPAN A & C

				EXTERIOR UNIT		INTERIOR UNIT	
BAR	NUMBER	SIZE	TYPE	LENGTH	WEIGHT	LENGTH	WEIGHT
B22	6	#4	STR	24'-6"	98	24'-6"	98
✱S3	71	#4	1	5'-6"	261		
S10	8	#5	3	4'-9"	40	4'-9"	40
S11	144	#4	3			5'-10"	561
S11	200	#4	3	5'-10"	779		
S14	4	#4	3	5'-7"	15	5'-7"	15
S15	4	#5	3	7'-1"	30	7'-1"	30
REINFORCING STEEL			LBS.		962		744
✱EPOXY COATED REINFORCING STEEL			LBS.		261		
7000 P.S.I. CONCRETE			CU. YDS.		11.8		11.8
0.6"Ø L.R. STRANDS			No.		28		28

BILL OF MATERIAL FOR ONE 70' CORED SLAB UNIT SPAN B

				EXTERIOR UNIT		INTERIOR UNIT	
BAR	NUMBER	SIZE	TYPE	LENGTH	WEIGHT	LENGTH	WEIGHT
B22	6	#4	STR	24'-6"	98	24'-6"	98
✱S3	71	#4	1	5'-6"	261		
S10	8	#5	3	4'-9"	40	4'-9"	40
S11	144	#4	3			5'-10"	561
S11	193	#4	3	5'-10"	752		
S14	4	#4	3	5'-7"	15	5'-7"	15
S15	4	#5	3	7'-1"	30	7'-1"	30
REINFORCING STEEL			LBS.		935		744
✱EPOXY COATED REINFORCING STEEL			LBS.		261		
7000 P.S.I. CONCRETE			CU. YDS.		11.8		11.8
0.6"Ø L.R. STRANDS			No.		28		28

BAR TYPES

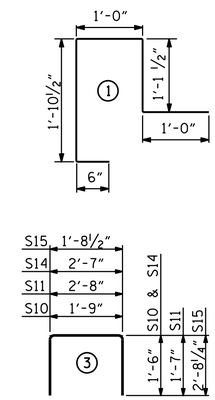

ALL BAR DIMENSIONS ARE OUT TO OUT

CONCRETE RELEASE STRENGTH

UNIT	PSI
70' UNITS	5500

GRADE 270 STRANDS

	0.6"Ø L.R.
AREA (SQUARE INCHES)	0.217
ULTIMATE STRENGTH (LBS. PER STRAND)	58,600
APPLIED PRESTRESS (LBS. PER STRAND)	43,950

CORED SLABS REQUIRED

	NUMBER	LENGTH	TOTAL LENGTH
70' UNIT			
EXTERIOR C.S.	6	70'-0"	420'-0"
INTERIOR C.S.	24	70'-0"	1680'-0"
TOTAL	30		2100'-0"

NOTES

ALL PRESTRESSING STRANDS SHALL BE 7-WIRE LOW RELAXATION GRADE 270 STRANDS AND SHALL CONFORM TO AASHTO M203 EXCEPT FOR SAMPLING REQUIREMENTS WHICH SHALL BE IN ACCORDANCE WITH THE STANDARD SPECIFICATIONS.

ALL REINFORCING STEEL CAST WITH THE CORED SLAB SECTIONS SHALL BE GRADE 60 AND SHALL BE INCLUDED IN THE UNIT PRICE BID FOR PRESTRESSED CONCRETE CORED SLABS.

RECESSES FOR TRANSVERSE STRANDS SHALL BE GROUTED AFTER THE TENSIONING OF THE STRANDS.

THE BACKER RODS SHALL CONFORM TO THE REQUIREMENTS OF TYPE M BOND BREAKER. SEE SECTION 1028 OF THE STANDARD SPECIFICATIONS.

WHEN CORED SLABS ARE CAST, AN INTERNAL HOLD-DOWN SYSTEM SHALL BE EMPLOYED TO PREVENT VOIDS FROM RISING OR MOVING SIDEWAYS. AT LEAST SIX WEEKS PRIOR TO CASTING CORED SLABS, THE CONTRACTOR SHALL SUBMIT TO THE ENGINEER FOR REVIEW AND COMMENT, DETAILED DRAWINGS OF THE PROPOSED HOLD-DOWN SYSTEM. IN ADDITION TO STRUCTURAL DETAILS, LOCATION AND SPACING OF THE HOLD-DOWNS SHALL BE INDICATED.

THE TRANSFER OF LOAD FROM THE ANCHORAGES TO THE CORED SLAB UNIT SHALL BE DONE WHEN THE CONCRETE HAS REACHED A COMPRESSIVE STRENGTH OF NOT LESS THAN THE REQUIRED STRENGTH SHOWN IN THE "CONCRETE RELEASE STRENGTH" TABLE.

ALL REINFORCING STEEL IN VERTICAL CONCRETE BARRIER RAILS SHALL BE EPOXY COATED.

PRESTRESSING STRANDS SHALL BE CUT FLUSH WITH THE CORED SLAB UNIT ENDS.

APPLY EPOXY PROTECTIVE COATING TO CORED SLAB UNIT ENDS.

GROOVED CONTRACTION JOINTS, ½" IN DEPTH, SHALL BE TOOLED IN ALL EXPOSED FACES OF THE PARAPET RAIL AND IN ACCORDANCE WITH ARTICLE 825-10(B) OF THE STANDARD SPECIFICATIONS. A CONTRACTION JOINT SHALL BE LOCATED AT EACH THIRD POINT BETWEEN PARAPET RAIL EXPANSION JOINTS. ONLY ONE CONTRACTION JOINT IS REQUIRED AT MIDPOINT OF PARAPET RAIL SEGMENTS LESS THAN 20 FEET IN LENGTH AND NO CONTRACTION JOINTS ARE REQUIRED FOR THOSE SEGMENTS LESS THAN 10 FEET IN LENGTH.

FLAME CUTTING OF THE TRANSVERSE POST-TENSIONING STRAND IS NOT ALLOWED.

MAINTAIN A SYMMETRIC TENSION FORCE BETWEEN EACH PAIR OF TRANSVERSE POST TENSIONING STRANDS IN THE DIAPHRAGM.

THE #4 S11 STIRRUPS MAY BE SHIFTED AS NECESSARY TO MAINTAIN 1" CLEAR TO THE GROUTED RECESS.

FOR GROUT FOR STRUCTURES, SEE SPECIAL PROVISIONS.

THE PERMITTED THREADED INSERTS ARE DETAILED AS AN OPTION FOR THE CONTRACTOR TO ATTACH FALSEWORK AND FORMWORK DURING CONSTRUCTION.

THE PERMITTED THREADED INSERTS IN THE EXTERIOR UNITS SHALL BE SIZED BY THE CONTRACTOR, SPACED AT 4'-0" CENTERS AND GALVANIZED IN ACCORDANCE WITH SECTION 1076 OF THE STANDARD SPECIFICATIONS. STAINLESS STEEL THREADED INSERTS MAY BE USED AS AN ALTERNATE.

THE PERMITTED THREADED INSERTS SHALL BE GROUTED BY THE CONTRACTOR IMMEDIATELY FOLLOWING REMOVAL OF THE FALSEWORK.

THE COST OF THE PERMITTED THREADED INSERTS SHALL BE INCLUDED IN THE PRICE BID FOR THE PRECAST UNITS.

AT ALL FIXED AND EXPANSION ENDS OF CORED SLAB SECTIONS WITH HOLD-DOWN ANCHOR BOLTS, NUTS FOR ANCHOR BOLTS SHALL BE FINGER-TIGHTENED AND THEN BACKED OFF ½ TURN. THE THREAD OF THE BUT AND BOLT SHLL THEN BE BURRED WITH A SHARP POINTED TOOL.

THE 2½"Ø ANCHOR HOLES AT FIXED ENDS OF CORED SLAB SECTIONS WITH HOLD-DOWN SWEDGE ANCHOR BOLTS SHALL BE FILLED WITH NON-SHRINK GROUT TO THE BOTTOM OF THE BOLT BLOCKOUT PRIOR TO INSTALLING THE ANCHOR PLATES, WASHERS, AND NUTS.
THE 2½"Ø ANCHOR HOLES AT EXPANSION ENDS OF CORED SLAB SECTIONS WITH HOLD-DOWN SWEDGE ANCHOR BOLTS SHALL BE FILLED WITH JOINT SEALER MATERIAL TO THE BOTTOM OF THE BOLT BLOCKOUT PRIOR TO INSTALLING THE ANCHOR PLATES, WASHERS, AND NUTS.

THE SWEDGE ANCHOR BOLT BLOCKOUTS IN CORED SLAB SECTIONS SHALL BE FILLED WITH NON-SHRINK GROUT PRIOR TO PLACEMENT OF THE CONCRETE WEARING SURFACE.

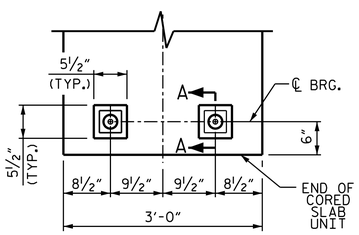

TYPICAL PLAN
(TYP. FOR ALL CORED SLABS)

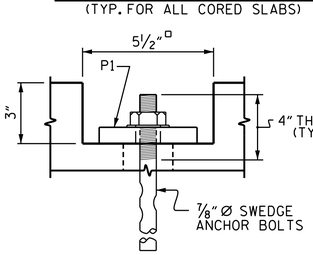

SECTION A-A
(FIXED)

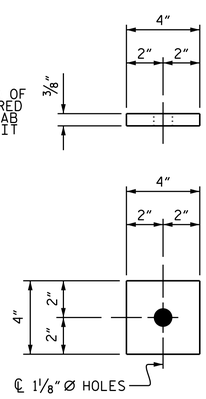

PLATE DETAILS - P1
(FIXED)
P1 (80 REQ'D.)

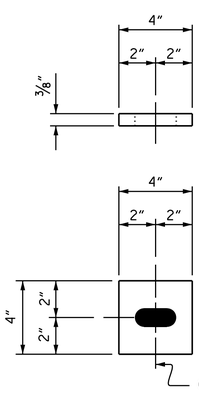

PLATE DETAILS - P1
(EXPANSION)
P1 (40 REQ'D.)

BLOCKOUT DETAIL FOR ANCHOR BOLTS

(TYP. FOR ALL CORED SLABS)

DEAD LOAD DEFLECTION AND CAMBER

	3'-0" x 2'-0"
70' CORED SLAB UNIT	0.6"Ø L.R. STRAND
CAMBER (SLAB ALONE IN PLACE)	2¼" ↑
DEFLECTION DUE TO CONCRETE OVERLAY (DEAD LOAD)	½" ↓
FINAL CAMBER	1¾" ↑

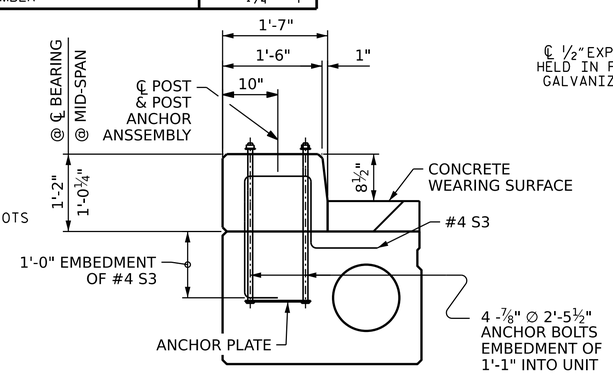

ALASKA RAIL CURB SECTION

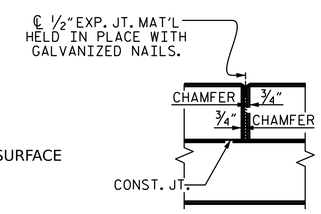

ELEVATION AT EXPANSION JOINTS

PROJECT NO. HB-0050
ASHE COUNTY
STATION: 16+04.00 -L-

SHEET 4 OF 4

STATE OF NORTH CAROLINA
DEPARTMENT OF TRANSPORTATION
RALEIGH

STANDARD
3'-0" X 2'-0"
PRESTRESSED CONCRETE
CORED SLAB UNIT

NORTH CAROLINA PROFESSIONAL SEAL 037903 ENGINEER JEFFREY M. KEPICH

Signed by: Jeffrey Kepich 7C6C71DBEF914E3... 6/12/2026

ms consultants, inc.
5444 Wade Park Blvd.
Suite 160
Raleigh, NC 27607
NC License Number : C-3239

DOCUMENT NOT CONSIDERED FINAL UNLESS ALL SIGNATURES COMPLETED

REVISIONS						SHEET NO.
NO.	BY:	DATE:	NO.	BY:	DATE:	S1-11
1			3			TOTAL SHEETS
2			4			26

ASSEMBLED BY:	J. KEPICH		DATE :	07/25
CHECKED BY :	J. PAPCIAK		DATE :	09/25
DRAWN BY :	MAA	6/10	REV. 5/18	MAA/THC
CHECKED BY :	MKT	7/10		

6/12/2026
c:\workdir\ncdot-pw.bentley.com_ncdot-pw-01\jeffrey kepich\d0529513\400_021_HB0050_SMU_CS_S1-11_040463.dgn
jkepich

STD. NO. 24PCS3_30_90S

Docusign Envelope ID: 1744488F-FDFB-8A99-8142-3188EE09531A

8/26/21

BILL OF MATERIAL FOR 2 CURBS & 4 END POSTS

BAR	NO.	SIZE	TYPE	LENGTH	WEIGHT
*B2	36	#4	STR	22'-11"	551
*E1	40	#7	STR	3'-2"	259
*F1	32	#6	STR	3'-5"	164

EPOXY COATED REINF. STEEL = 974 LBS.

CLASS AA CONCRETE = 31.2 CU. YDS.

1'-7" X 1'-2" CONCRETE CURB = 420.50 LIN. FT.

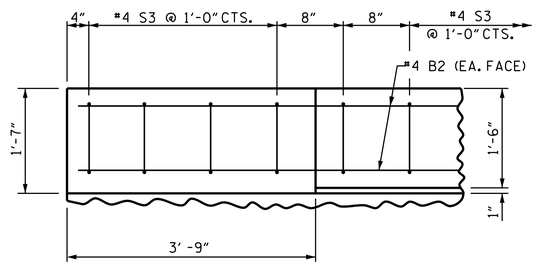

PLAN OF CURB

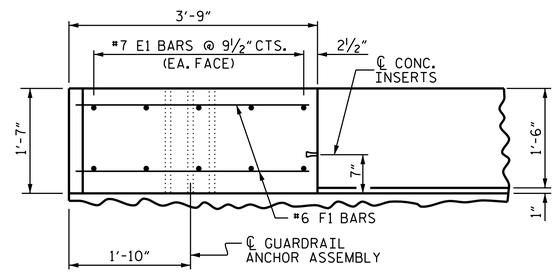

PLAN OF END POST

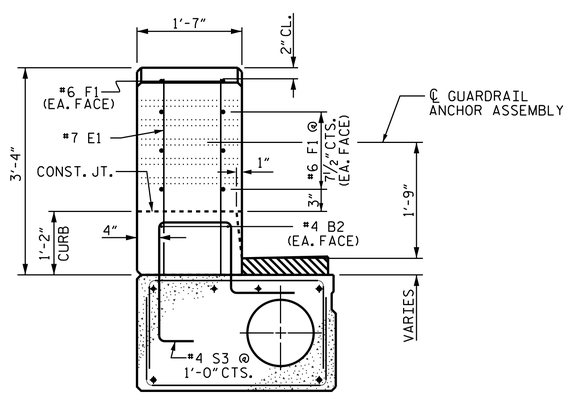

END VIEW

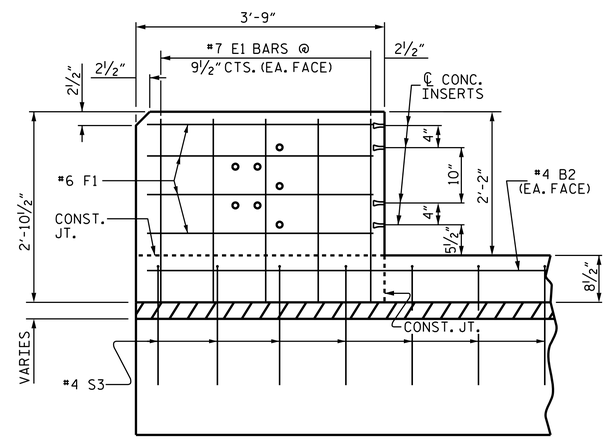

ELEVATION

CURB AND END POST FOR 32" ALASKA RAIL

PROJECT NO. HB-0050

ASHE COUNTY

STATION: 16+04.00 -L-

SHEET 5 OF 5

STATE OF NORTH CAROLINA
DEPARTMENT OF TRANSPORTATION
RALEIGH

CONCRETE CURBS AND END POSTS

NORTH CAROLINA PROFESSIONAL SEAL 037903 ENGINEER JEFFREY M KEPICH

Signed by: Jeffrey Kepich 7C5C71DBEF914E3... 6/12/2026

ms consultants, inc.
5444 Wade Park Blvd.
Suite 160
Raleigh, NC 27607
NC License Number : C-3239

DOCUMENT NOT CONSIDERED FINAL UNLESS ALL SIGNATURES COMPLETED

REVISIONS							SHEET NO.
NO.	BY:	DATE:	NO.	BY:	DATE:		S1-12
1			3				TOTAL SHEETS
2			4				26

DRAWN BY : J. KEPICH DATE : 07/25
CHECKED BY : J. PAPCIAK DATE : 09/25
DESIGN ENGINEER OF RECORD: J. KEPICH DATE : 07/25

6/12/2026
c:\workdir\ncdot-pw.bentley.com_ncdot-pw-01\jeffrey kepich\d0529513\400_023_HB0050_SMU_AR_S1-12_040463.dgn
jkepich

Docusign Envelope ID: 1744488F-FDFB-8A99-8142-3188EE09531A

8/26/21

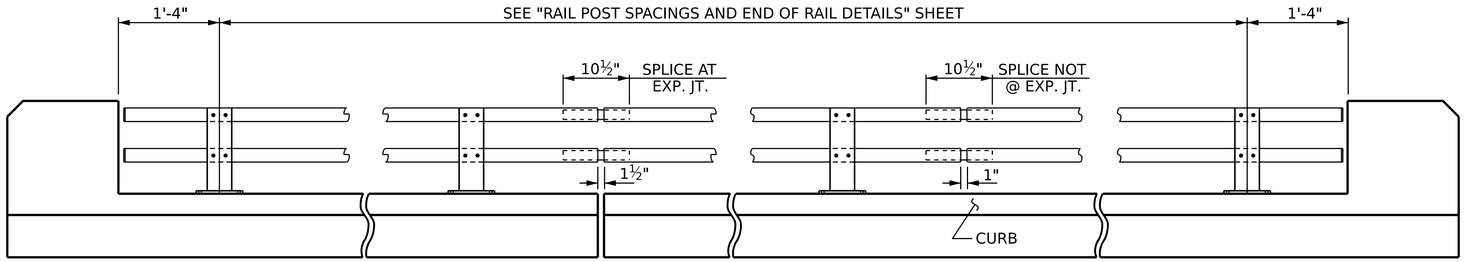

ELEVATION

NOTE : FOR ATTACHMENT OF METAL RAIL TO END POST, SEE STANDARD NO. BMR9.

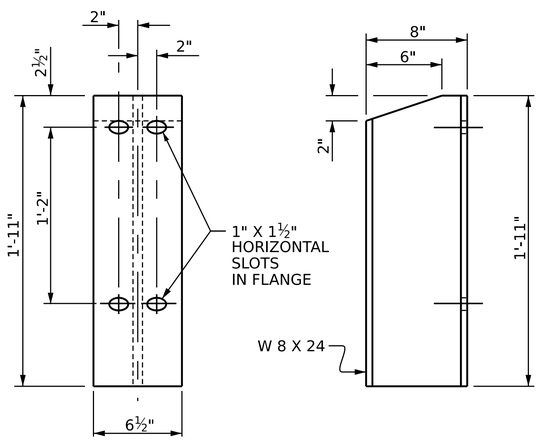

FRONT ELEVATION

SIDE ELEVATION

DETAILS OF POST

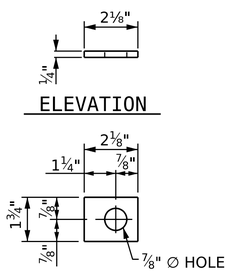

PLATE WASHER

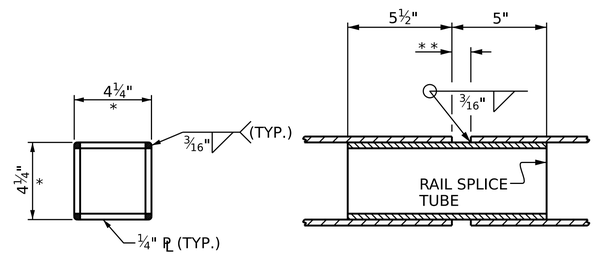

RAIL SPLICE DETAILS

* - DIMENSION AFTER GRINDING RADIUS ON CORNERS TO MATCH INSIDE OF METAL RAIL. GRIND ALL EDGES PRIOR TO GALVANIZING TO ASSURE FIT.

* * -1" FOR SPLICE NOT AT EXPANSION JOINT; 1½" FOR OPENING FOR SPLICES AT EXPANSION JOINT AT BENT 1.

NOTES

METAL RAIL SHALL BE GALVANIZED STEEL IN ACCORDANCE WITH THE REQUIREMENTS OF THE GENERAL NOTES AND THE FOLLOWING SPECIFICATIONS. ALUMINUM RAIL WILL NOT BE AN OPTION.

GALVANIZED STEEL RAILS

MATERIAL AND GALVANIZING ARE TO CONFORM TO THE FOLLOWING SPECIFICATIONS:

POST, POST BASES, ANCHOR PLATES AND RAIL SPLICE TUBES: ASTM A36 GRADE 36 STRUCTURAL STEEL-GALVANIZED TO ASTM A123.

THE CUT ENDS OF GALVANIZED STEEL RAILING, AFTER GRINDING SMOOTH SHALL BE GIVEN TWO COATS OF ZINC RICH PAINT MEETING THE REQUIREMENTS OF FEDERAL SPECIFICATION MIL-P-26915 USAF TYPE 1, OR OF FEDERAL SPECIFICATIONS TT-P-641.

RAILS: ASTM A500 GRADE B - GALVANIZED TO ASTM A123.

WELDED RAIL STUDS: ASTM A108-GALVANIZED TO ASTM A123.

HIGH STRENGTH ANCHOR BOLTS SHALL CONFORM TO ASTM F1554 GRADE 105. HEAVY HEX NUTS SHALL CONFORM TO ASTM A563 DH, AND WASHERS TO ASTM F436,TYPE 1. ANCHOR BOLTS, NUTS AND WASHERS SHALL BE GALVANIZED TO ASTM A123.

GENERAL NOTES

RAILING SHALL BE CONTINUOUS FROM END POST TO END POST OF BRIDGE. EACH JOINT IN RAIL LENGTH SHALL BE SPLICED AS DETAILED. PANEL LENGTHS OF RAIL SHALL BE ATTACHED TO A MINIMUM OF THREE POSTS.

FOR END OF RAIL TO CLEAR FACE OF CONCRETE END POST DIMENSION, SEE STANDARD NO. BMR9.

CERTIFIED MILL REPORTS ARE REQUIRED FOR RAILS AND POSTS. SHOP INSPECTION IS NOT REQUIRED.

METAL RAIL POSTS SHALL BE SET NORMAL TO CURB GRADE.

CURVED RAIL USAGE: WHERE RAILS ARE TO BE USED ON BRIDGES ON HORIZONTAL AND/OR VERTICAL CURVATURE THE CONTRACTOR MAY, AT HIS OPTION, HAVE THE REQUIRED CURVATURE IN THE RAIL FORMED IN THE SHOP OR IN THE FIELD. IN EITHER EVENT, THE RAIL SHALL CONFORM WITHOUT BUCKLING OR KINKING TO THE REQUIRED CURVATURE IN A UNIFORM MANNER ACCEPTABLE TO THE ENGINEER.

TO INSURE FUTURE IDENTIFICATION OF THE FABRICATOR, A PERMANENT IDENTIFYING MARK SHALL BE PLACED ON EACH POST. THE METHOD OF MARKING AND LOCATION SHALL BE SUCH THAT IT DOES NOT DETRACT FROM THE APPEARANCE OF THE POST, BUT REMAINS VISIBLE AFTER RAIL PLACEMENT.

SHIMS SHALL BE USED AS NECESSARY FOR POST ALIGNMENT.

GROOVED CONTRACTION JOINTS,½" IN DEPTH, SHALL BE TOOLED IN ALL EXPOSED FACES OF THE CURB AND IN ACCORDANCE WITH ARTICLE 825-10(B) OF THE STANDARD SPECIFICATIONS. A CONTRACTION JOINT SHALL BE LOCATED AT EACH THIRD POINT BETWEEN CURB EXPANSION JOINTS. ONLY ONE CONTRACTION JOINT IS REQUIRED AT MIDPOINT OF CURB SEGMENTS LESS THAN 20 FEET IN LENGTH AND NO CONTRACTION JOINTS ARE REQUIRED FOR THOSE SEGMENTS LESS THAN 10 FEET IN LENGTH.

THE RAIL SECTIONS SHALL BE ATTACHED TO THE POSTS BY TWO THREADED ¾" ∅ WELDED STUDS, PLATE WASHERS, LOCKWASHERS, AND NUTS.

FOR 32" ALASKA RAIL, SEE THE STANDARD SPECIFICATIONS.

METAL RAIL LENGTH 405.5 LIN. FT.

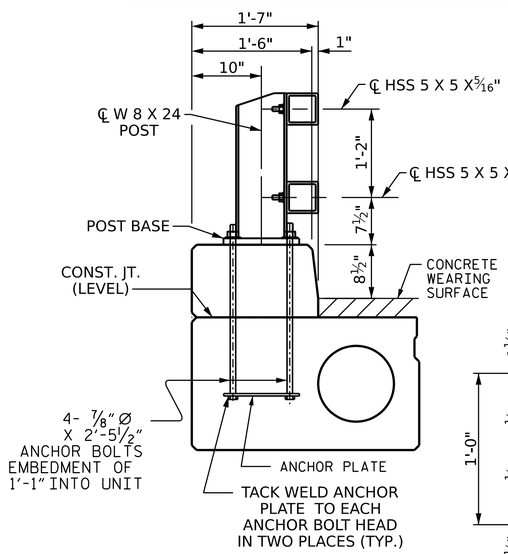

SECTION THRU RAIL

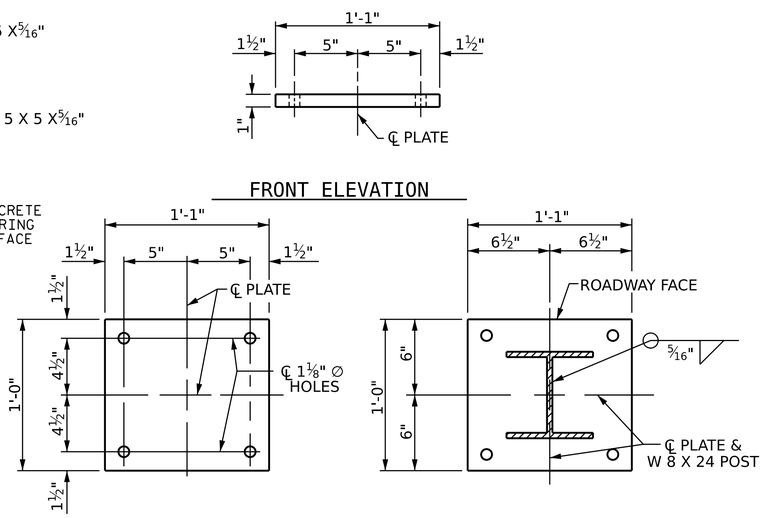

POST BASE DETAILS

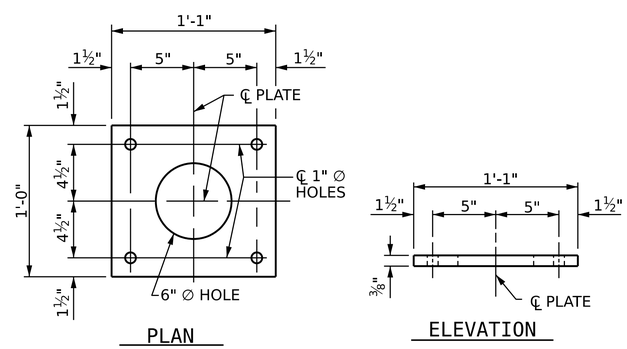

ANCHOR PLATE DETAILS

PROJECT NO. HB-0050

ASHE COUNTY

STATION: 16+04.00 -L-

SHEET 1 OF 2

STATE OF NORTH CAROLINA
DEPARTMENT OF TRANSPORTATION
RALEIGH

STANDARD

32" ALASKA RAIL

NORTH CAROLINA PROFESSIONAL SEAL 037903 ENGINEER JEFFREY M. KEPICH

Signed by: Jeffrey Kepich 7C5C71DBEF914E3... 6/12/2026

ms consultants, inc.
5444 Wade Park Blvd.
Suite 160
Raleigh, NC 27607
NC License Number : C-3239

DOCUMENT NOT CONSIDERED FINAL UNLESS ALL SIGNATURES COMPLETED

REVISIONS						SHEET NO.
NO.	BY:	DATE:	NO.	BY:	DATE:	S1-13
1			3			TOTAL SHEETS
2			4			26

STD. NO. BMR8

ASSEMBLED BY:	J. KEPICH		DATE :	07/25
CHECKED BY :	J. PAPCIAK		DATE :	09/25
DRAWN BY :	RWW	7/14	REV. 12/17	MAA/THC
CHECKED BY :	TMG	7/14	REV. 5/18	MAA/THC
			REV. 10/23	BNB/SNM

6/12/2026
c:\workdir\ncdot-pw.bentley.com_ncdot-pw-01\jeffrey kepich\d0529513\400_025_HB0050_SMU_AR_S1-13_040463.dgn
jkepich

Docusign Envelope ID: 1744488F-FDFB-8A99-8142-3188EE09531A

8/26/21

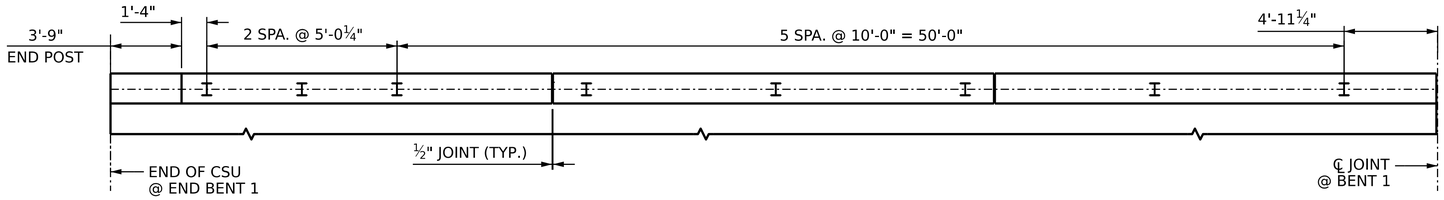

SPAN A

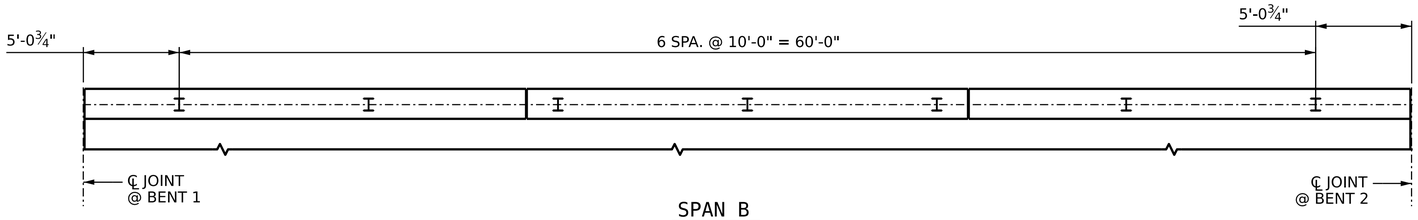

SPAN B

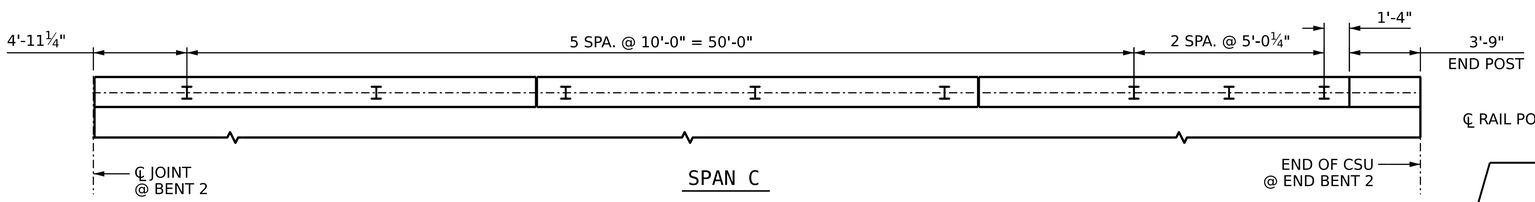

SPAN C

PART PLAN OF LEFT RAIL POST SPACINGS

(RIGHT RAIL SIMILAR)

NOTES

STRUCTURAL CONCRETE INSERT

EACH STRUCTURAL CONCRETE INSERT ASSEMBLY SHALL CONSIST OF THE FOLLOWING COMPONENTS:

A. FERRULE SHALL BE MADE FROM STEEL MEETING THE REQUIREMENTS OF AASHTO M169, GRADE 12L14 AND SHALL HAVE A MINIMUM LENGTH OF THREADS OF 1½".

B. 1 - ¾" ∅ x 1⅝" BOLT WITH WASHER. BOLT SHALL CONFORM TO THE REQUIREMENTS OF ASTM A307. BOLT AND WASHER SHALL BE GALVANIZED. (AT THE CONTRACTOR'S OPTION, STAINLESS STEEL BOLT AND WASHER MAY BE USED AS AN ALTERNATE FOR THE ¾" ∅ x 1⅝" GALVANIZED BOLT AND WASHER. THEY SHALL CONFORM TO OR EXCEED THE MECHANICAL REQUIREMENTS OF ASTM A307. THE USE OF THIS ALTERNATE SHALL BE APPROVED BY THE ENGINEER.)

C. WIRE STRUT SHOWN IN THE STRUCTURAL CONCRETE INSERT DETAIL IS THE MINIMUM ALLOWABLE SIZE AND SHALL HAVE A MINIMUM TENSILE STRENGTH OF 100,000 PSI. AS AN OPTION, A 7/16" ∅ WIRE STRUT WITH A MINIMUM TENSILE STRENGTH OF 90,000 PSI IS ACCEPTABLE.

NOTES

METAL RAIL TO END POST CONNECTION

EACH METAL RAIL TO END POST CONNECTION SHALL CONSIST OF THE FOLLOWING COMPONENTS:

A. ½" METAL BRACKET PLATE AND ¼" METAL RAIL INSERT TUBE SHALL CONFORM TO AASHTO ASTM A36 GRADE 36 AND SHALL BE GALVANIZED AFTER FABRICATION TO ASTM A123.

B. ¾" STRUCTURAL CONCRETE INSERTS SHALL HAVE A WORKING LOAD SHEAR CAPACITY OF 4800 LBS. THE FERRULES SHALL ENGAGE A ¾" ∅ x 1⅝" BOLT WITH 2" O.D. WASHER IN PLACE. THE ¾" ∅ x 1⅝" BOLT SHALL HAVE N. C. THREADS.

THE ¾" STRUCTURAL CONCRETE INSERTS WITH BOLTS SHALL BE ASSEMBLED IN THE SHOP.

THE COST OF THE ¾" STRUCTURAL CONCRETE INSERT, THE ½" BRACKET PLATES, AND THE RAIL INSERT TUBES COMPLETE IN PLACE SHALL BE INCLUDED IN THE VARIOUS PAY ITEMS.

THE CONTRACTOR, AT HIS OPTION, MAY USE AN ADHESIVE BONDING SYSTEM IN LIEU OF THE STRUCTURAL CONCRETE INSERT EMBEDDED IN THE END POST. IF THE ADHESIVE BONDING SYSTEM IS USED, THE ¾" ∅ x 1⅝" BOLTS WITH WASHERS SHALL BE REPLACED WITH ¾" ∅ x 6½" BOLTS AND 2" O.D. WASHERS. ALL SPECIFICATIONS THAT APPLY TO THE ¾" ∅ x 1⅝" BOLTS SHALL APPLY TO THE ¾" ∅ x 6½" BOLTS. FIELD TESTING OF THE ADHESIVE BONDING SYSTEM IS NOT REQUIRED.

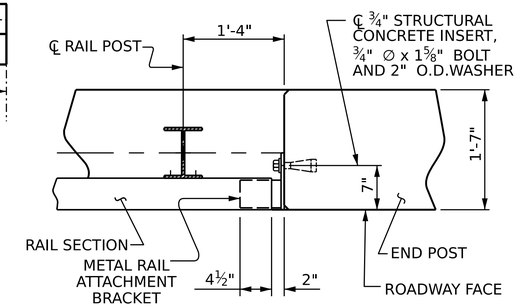

PLAN - RAILS AND END POST

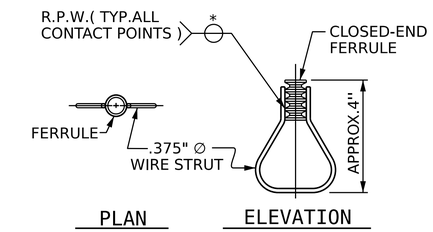

STRUCTURAL CONCRETE INSERT

* EACH WELDED ATTACHMENT OF WIRE TO FERRULE SHALL DEVELOP THE TENSILE STRENGTH OF THE WIRE.

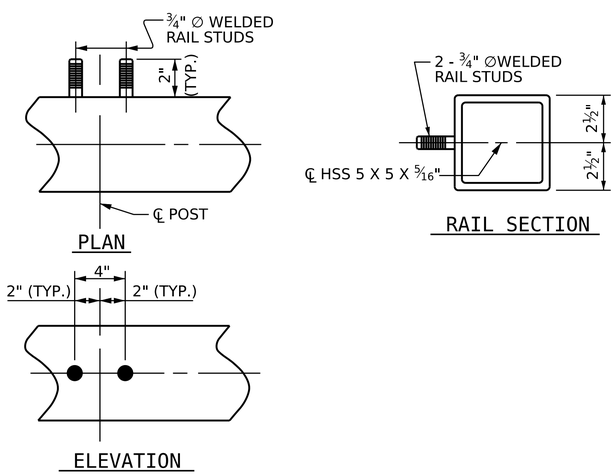

RAIL STUD DETAILS

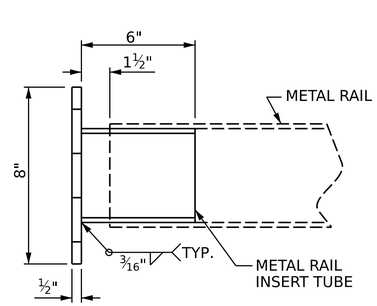

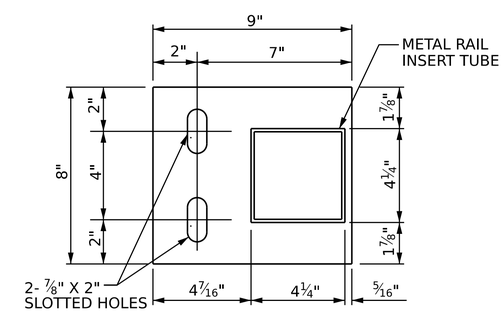

METAL RAIL ATTACHMENT BRACKET

THE METAL RAIL INSERT TUBE SHALL BE FABRICATED FROM ¼" PLATES.

PROJECT NO. HB-0050

ASHE COUNTY

STATION: 16+04.00 -L-

SHEET 2 OF 2

STATE OF NORTH CAROLINA
DEPARTMENT OF TRANSPORTATION
RALEIGH

STANDARD

RAIL POST SPACINGS AND END OF RAIL DETAILS

FOR 32" ALASKA RAIL

NORTH CAROLINA PROFESSIONAL SEAL 037903 ENGINEER JEFFREY M KEPICH

Signed by: Jeffrey Kepich 7C5C71DBEF914E3... 6/12/2026

DOCUMENT NOT CONSIDERED FINAL UNLESS ALL SIGNATURES COMPLETED

ms consultants, inc.
5444 Wade Park Blvd.
Suite 160
Raleigh, NC 27607
NC License Number : C-3239

REVISIONS						SHEET NO.
NO.	BY:	DATE:	NO.	BY:	DATE:	S1-14
1			3			TOTAL SHEETS
2			4			26

STD. NO. BMR9

ASSEMBLED BY:	J. KEPICH	DATE :	07/25
CHECKED BY :	J. PAPCIAK	DATE :	09/25
DRAWN BY :	RWW 7/14	REV. 12/17	MAA/THC
CHECKED BY :	TMG 7/14	REV. 5/18	MAA/THC
		REV. 10/23	BNB/SNM

6/12/2026
c:\workdir\ncdot-pw.bentley.com_ncdot-pw-01\jeffrey kepich\d0529513\400_027_HB0050_SMU_AR_S1-14_040463.dgn
jkepich

Docusign Envelope ID: 1744488F-FDFB-8A99-8142-3188EE09531A

8/26/21

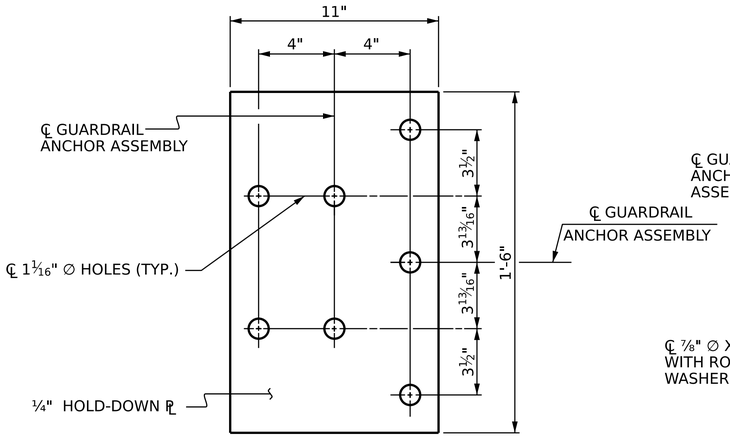

PLAN

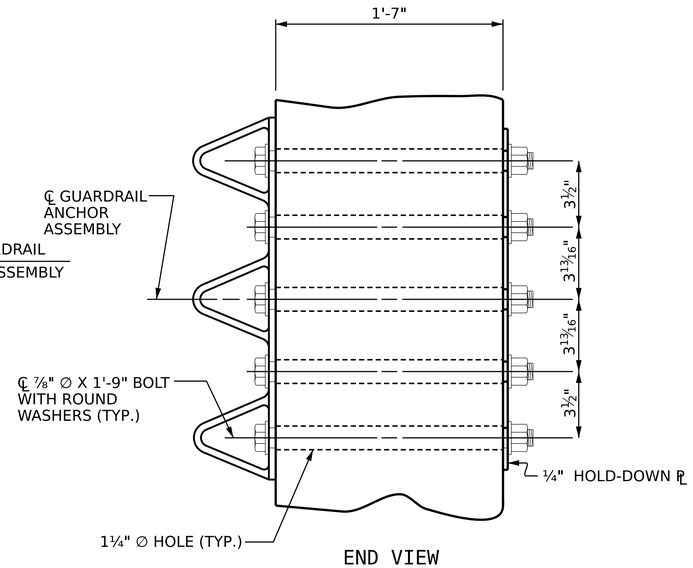

END VIEW

GUARDRAIL ANCHOR ASSEMBLY DETAILS

NOTES

THE GUARDRAIL ANCHOR ASSEMBLY SHALL CONSIST OF A ¼" HOLD DOWN PLATE AND 7 - ⅞" ∅ BOLTS WITH NUTS AND WASHERS.

THE HOLD-DOWN PLATE SHALL CONFORM TO AASHTO M270 GRADE 36. AFTER FABRICATION, THE HOLD-DOWN PLATE SHALL BE HOT-DIP GALVANIZED IN ACCORDANCE WITH AASHTO M111.

BOLTS SHALL CONFORM TO THE REQUIREMENTS OF ASTM A307 AND NUTS SHALL CONFORM TO THE REQUIREMENTS OF AASHTO M291. BOLTS, NUTS AND WASHERS SHALL BE GALVANIZED. AT THE CONTRACTOR'S OPTION, STAINLESS STEEL BOLTS, NUTS AND WASHERS MAY BE USED AS AN ALTERNATE FOR THE ⅞" ∅ GALVANIZED BOLTS, NUTS AND WASHERS. THEY SHALL CONFORM TO OR EXCEED THE MECHANICAL REQUIREMENTS OF ASTM A307. THE USE OF THIS ALTERNATE SHALL BE APPROVED BY THE ENGINEER.

THE GUARDRAIL ANCHOR ASSEMBLY IS REQUIRED AT ALL POINTS WHERE APPROACH GUARDRAIL IS TO BE ATTACHED TO THE END OF THE PARAPET. FOR POINTS OF ATTACHMENT, SEE SKETCH.

AFTER INSTALLATION, THE EXPOSED THREAD OF THE BOLT SHALL BE BURRED WITH A SHARP POINTED TOOL.

THE COST OF THE GUARDRAIL ANCHOR ASSEMBLIES WITH BOLTS, NUTS AND WASHERS COMPLETE IN PLACE, SHALL BE INCLUDED IN THE VARIOUS PAY ITEMS.

THE VERTICAL REINFORCING BARS MAY BE SHIFTED SLIGHTLY IN THE END POST TO CLEAR ASSEMBLY BOLTS.

THE 1 ¼" ∅ HOLES SHALL BE FORMED OR DRILLED WITH A CORE BIT. IMPACT TOOLS WILL NOT BE PERMITTED. ANY CONCRETE DAMAGED BY THIS WORK SHALL BE REPAIRED TO THE SATISFACTION OF THE ENGINEER.

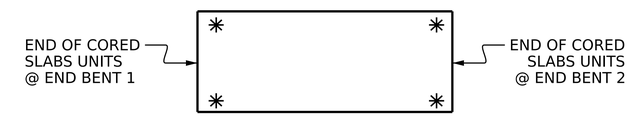

SKETCH SHOWING POINTS OF ATTACHMENT

* LOCATION OF GUARDRAIL ATTACHMENT

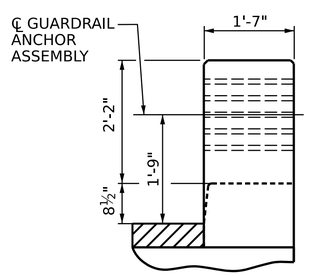

END VIEW
(32" ALASKA RAIL)

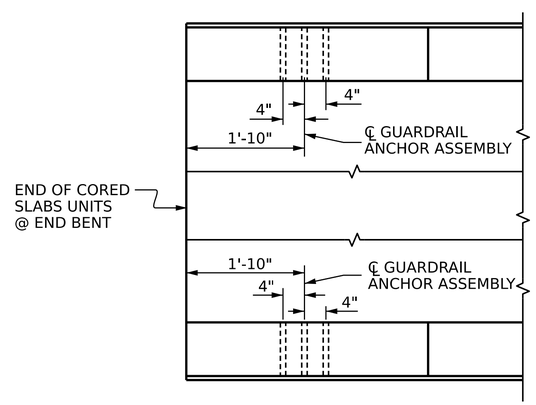

PLAN

LOCATION OF GUARDRAIL ANCHOR AT END POST

PROJECT NO. HB-0050
ASHE COUNTY
STATION: 16+04.00 -L-

STATE OF NORTH CAROLINA
DEPARTMENT OF TRANSPORTATION
RALEIGH
STANDARD

GUARDRAIL ANCHORAGE DETAILS FOR METAL RAILS

NORTH CAROLINA PROFESSIONAL SEAL 037903 ENGINEER JEFFREY M KEPICH

Signed by: Jeffrey Kepich 7C5C71DBEF914E3... 6/12/2026

ms consultants, inc.
5444 Wade Park Blvd.
Suite 160
Raleigh, NC 27607
NC License Number : C-3239

DOCUMENT NOT CONSIDERED FINAL UNLESS ALL SIGNATURES COMPLETED

REVISIONS						SHEET NO.
NO.	BY:	DATE:	NO.	BY:	DATE:	S1-15
1			3			TOTAL SHEETS
2			4			26

ASSEMBLED BY:	J. KEPICH	DATE :	07/25
CHECKED BY :	J. PAPCIAK	DATE :	09/25
DRAWN BY :	MAA 5/10	REV. 1/15	MAA/TMG
CHECKED BY :	GM 5/10	REV. 12/17	MAA/THC
		REV. 5/18	MAA/THC

6/12/2026
c:\workdir\ncdot-pw.bentley.com_ncdot-pw-01\jeffrey kepich\d0529513\400_029_HB0050_SMU_GR_S1-15_040463.dgn
jkepich

STD. GRA3 Sht.3

Docusign Envelope ID: 1744488F-FDFB-8A99-8142-3188EE09531A

8/26/21

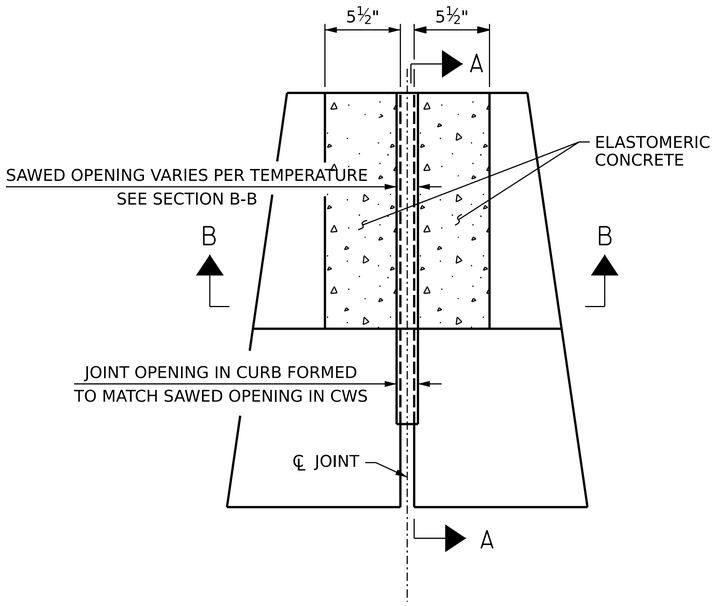

PLAN

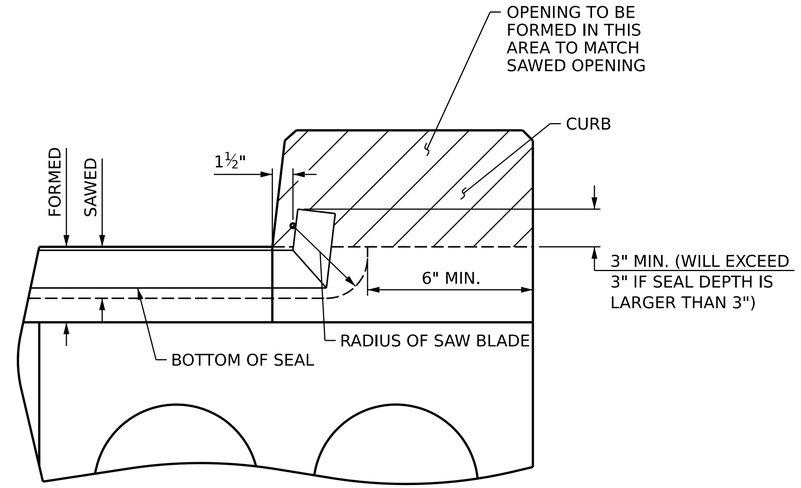

SECTION A-A

FOAM JOINT SEAL TO BE CUT, HEAT WELDED AND TURNED UP PARALLEL TO FACE OF THE CURB

NOTES :

THE NOMINAL UNCOMPRESSED SEAL WIDTH OF THE FOAM JOINT SEAL SHALL BE 2" AT BENT NO. 1.

FOR FOAM JOINT SEALS, SEE SPECIAL PROVISIONS.

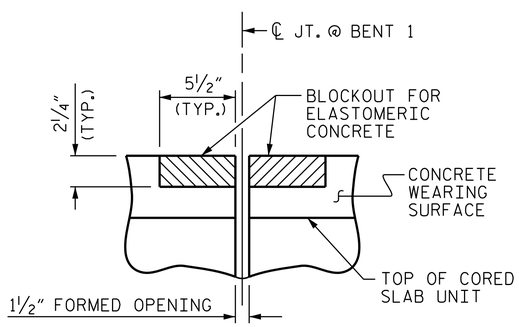

SECTION B-B

FOAM JOINT SEAL
(PRE-SAWED ELASTOMERIC CONCRETE DIMENSIONS)

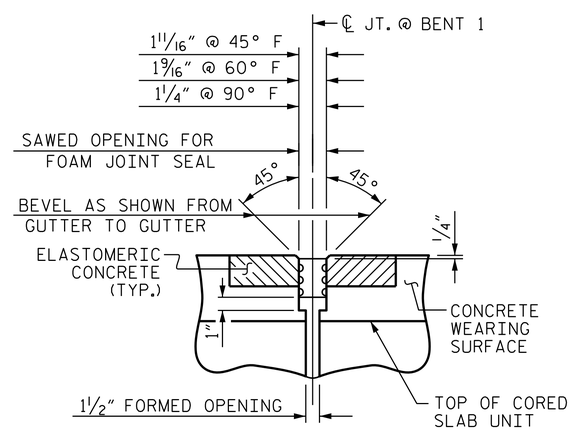

SECTION B-B

FOAM JOINT SEAL

PROJECT NO. HB-0050

ASHE COUNTY

STATION: 16+04.00 -L-

STATE OF NORTH CAROLINA
DEPARTMENT OF TRANSPORTATION
RALEIGH

FOAM JOINT DETAILS

ASSEMBLED BY:	J. KEPICH	DATE :	07/25
CHECKED BY :	S. MOSER	DATE :	09/25

DRAWN BY :	REK	1/84	REV. 10/1/11	MAA/GM
CHECKED BY :	RDU	1/84	REV. 12/21/11	MAA/GM
			REV. 12/17	MAA/THC

6/12/2026
c:\workdir\ncdot-pw.bentley.com_ncdot-pw-01\jeffrey kepich\d0529513\400_031_HB0050_SMU_JT_S1-16_040463.dgn
jkepich

ms consultants, inc.
5444 Wade Park Blvd.
Suite 160
Raleigh, NC 27607
NC License Number : C-3239

NORTH CAROLINA PROFESSIONAL SEAL 037903 ENGINEER JEFFREY M KEPICH

Signed by: Jeffrey Kepich
7C5C71DBEF914E3...
6/12/2026

DOCUMENT NOT CONSIDERED FINAL UNLESS ALL SIGNATURES COMPLETED

REVISIONS									SHEET NO.
NO.	BY:	DATE:	NO.	BY:	DATE:				S1-16
1			3						TOTAL SHEETS
2			4						26

Docusign Envelope ID: 1744488F-FDFB-8A99-8142-3188EE09531A

8/26/21

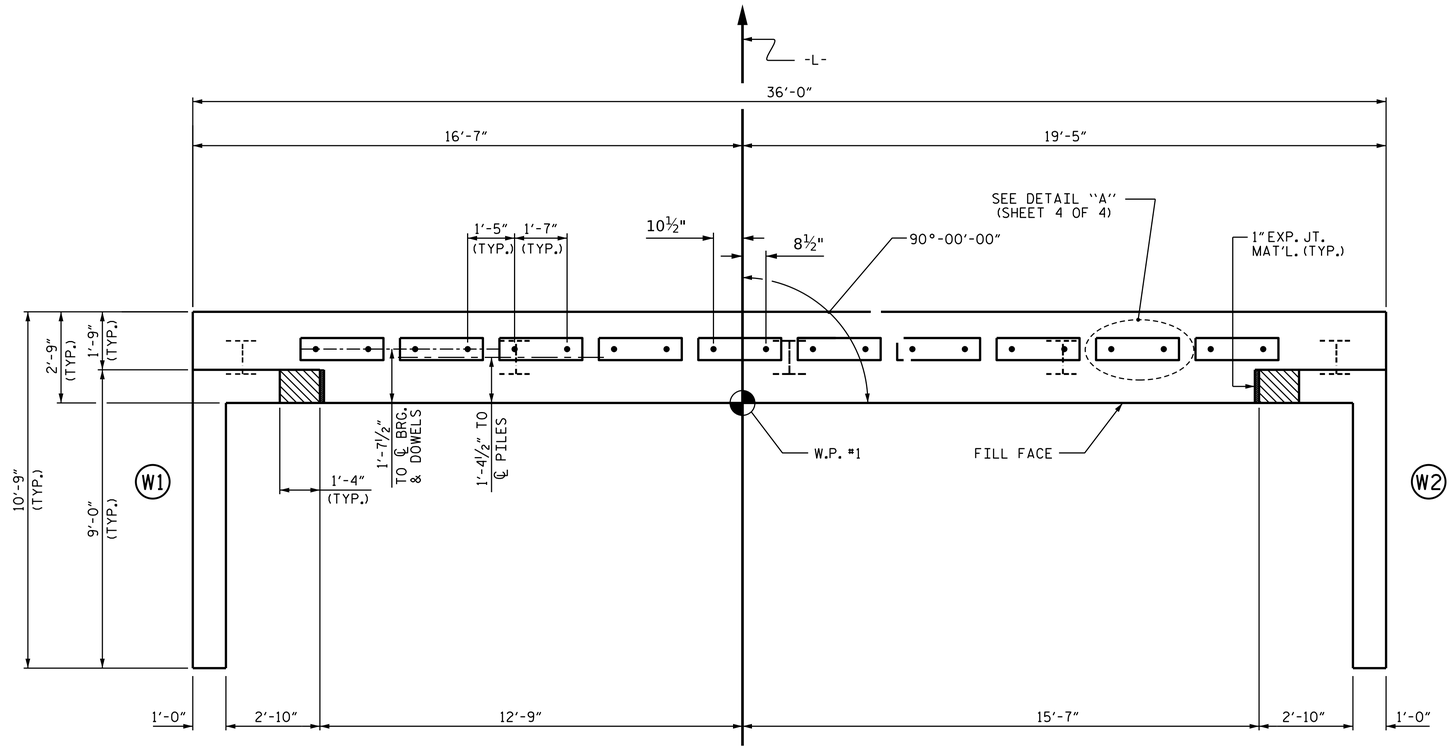

PLAN

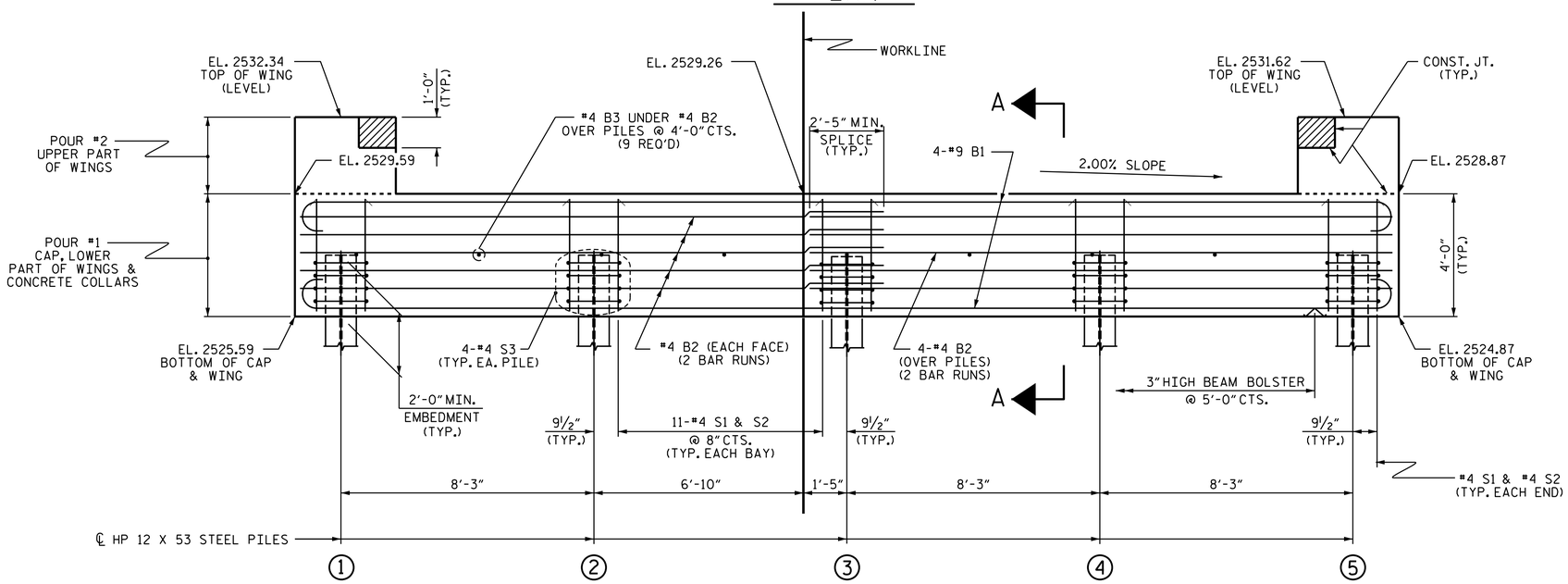

ELEVATION

WINGS NOT SHOWN FOR CLARITY.
FOR SECTION A-A, SEE SHEET 4 OF 4.
CONCRETE COLLARS FOR STEEL PILES NOT SHOWN IN PLAN AND ELEVATION VIEWS FOR CLARITY.
SEE "CORROSION PROTECTION FOR STEEL PILES DETAIL", SHEET 4 OF 4.

NOTES

STIRRUPS IN CAP MAY BE SHIFTED AS NECESSARY TO CLEAR ANCHOR BOLT LOCATIONS.

THE CONCRETE IN THE SHADED AREA OF THE WING SHALL BE POURED AFTER THE VERTICAL CONCRETE BARRIER RAIL IS CAST IF SLIP FORMING IS USED.

FOR PILE SPLICE DETAILS, SEE SHEET 4 OF 4.

FOR WING DETAILS, SEE SHEET 3 OF 4.

SWEDGE ANCHOR BOLTS SHALL MEET THE REQUIREMENTS OF ASTM A449. ANCHOR PLATES, WASHERS, AND NUTS SHALL MEET THE REQUIREMENTS OF THE STANDARD SPECIFICATIONS. ANCHOR BOLTS, ANCHOR PLATES, WASHERS, AND NUTS SHALL BE GALVANIZED IN ACCORDANCE WITH THE STANDARD SPECIFICATIONS.

NO SEPARATE PAYMENT SHALL BE MADE FOR THE SWEDGE ANCHOR BOLTS, ANCHOR PLATES, WASHERS, AND NUTS. THE COST OF THE MATERIAL AND INSTALLATION SHALL BE CONSIDERED INCIDENTAL TO VARIOUS PAY ITEMS.

TOP OF PILE ELEVATIONS	
1	2527.56
2	2527.39
3	2527.23
4	2527.06
5	2526.90

PROJECT NO. HB-0050
ASHE COUNTY
STATION: 16+04.00 -L-

SHEET 1 OF 4

STATE OF NORTH CAROLINA
DEPARTMENT OF TRANSPORTATION
RALEIGH

SUBSTRUCTURE

END BENT No. 1

NORTH CAROLINA PROFESSIONAL SEAL 037903 ENGINEER JEFFREY M. KEPICH

Signed by: Jeffrey Kepich 7C5C71DBEF914E3... 6/12/2026

ms consultants, inc.
5444 Wade Park Blvd.
Suite 160
Raleigh, NC 27607
NC License Number : C-3239

DOCUMENT NOT CONSIDERED FINAL UNLESS ALL SIGNATURES COMPLETED

REVISIONS						SHEET NO.
NO.	BY:	DATE:	NO.	BY:	DATE:	S1-17
1			3			TOTAL SHEETS
2			4			26

ASSEMBLED BY:	J. KEPICH	DATE :	07/25
CHECKED BY :	J. PAPCIAK	DATE :	09/25
DRAWN BY :	WJH 12/11	REV. 4/15	MAA/TMG
CHECKED BY :	AAC 12/11		

6/12/2026
c:\workdir\ncdot-pw.bentley.com_ncdot-pw-01\jeffrey kepich\d0529513\400_033_HB0050_SMU_E1_S1-17_040463.dgn
jkepich

STD. NO. EB_30_90S4

Docusign Envelope ID: 1744488F-FDFB-8A99-8142-3188EE09531A

8/26/21

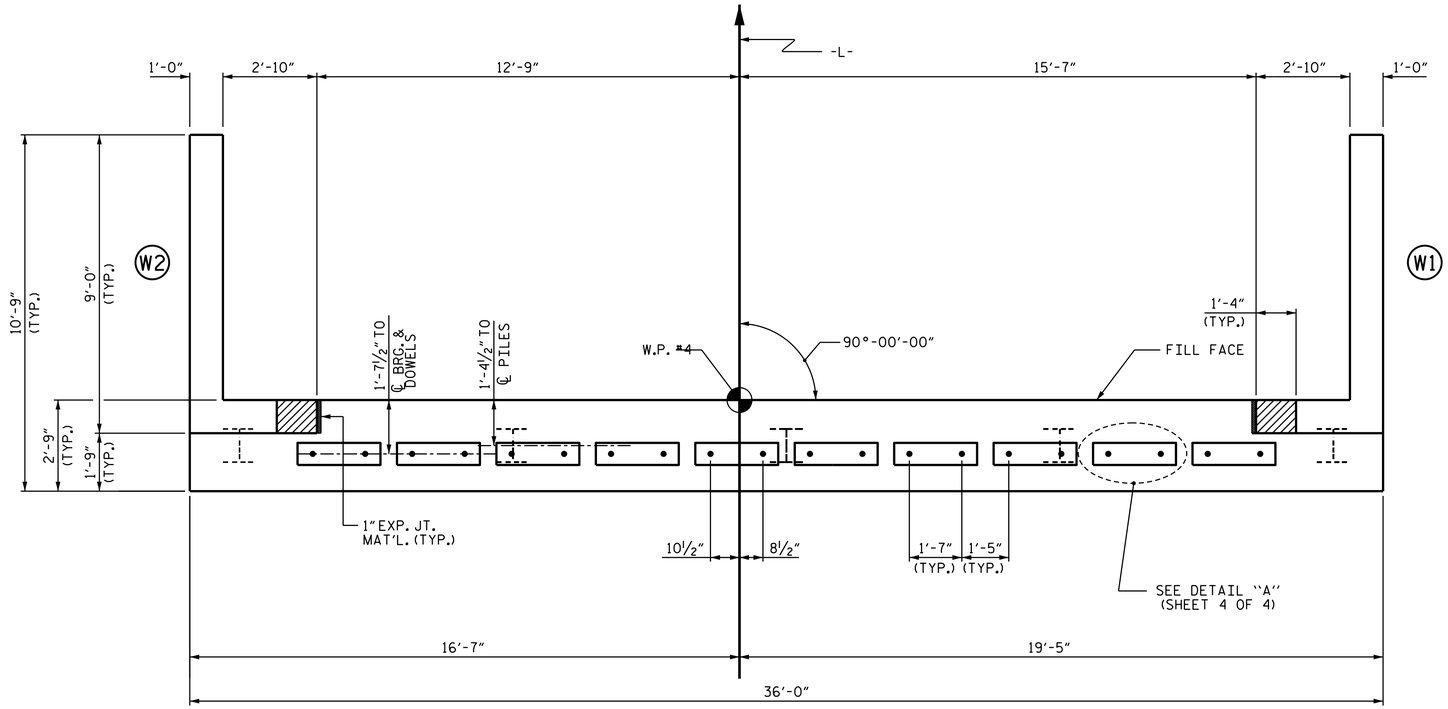

PLAN

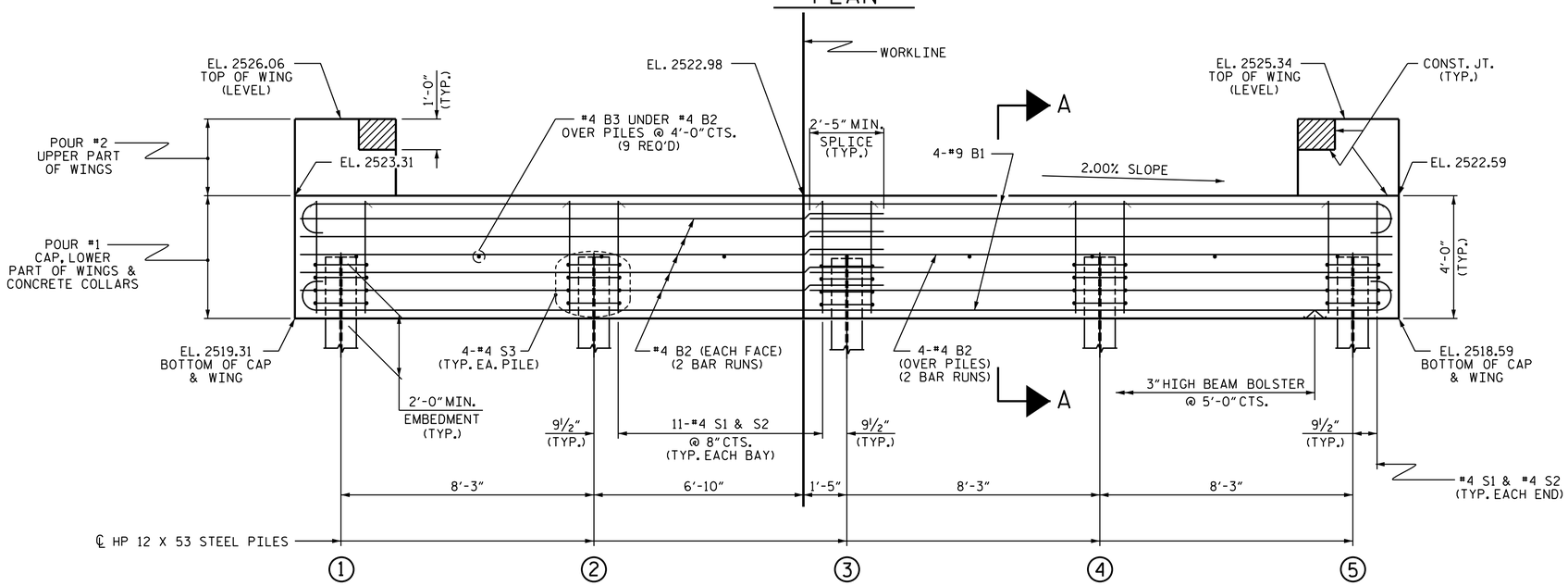

ELEVATION

WINGS NOT SHOWN FOR CLARITY.
FOR SECTION A-A, SEE SHEET 4 OF 4.
CONCRETE COLLARS FOR STEEL PILES NOT SHOWN IN PLAN AND ELEVATION VIEWS FOR CLARITY.
SEE "CORROSION PROTECTION FOR STEEL PILES DETAIL", SHEET 4 OF 4.

NOTES

STIRRUPS IN CAP MAY BE SHIFTED AS NECESSARY TO CLEAR ANCHOR BOLT LOCATIONS.

THE CONCRETE IN THE SHADED AREA OF THE WING SHALL BE POURED AFTER THE VERTICAL CONCRETE BARRIER RAIL IS CAST IF SLIP FORMING IS USED.

FOR PILE SPLICE DETAILS, SEE SHEET 4 OF 4.

FOR WING DETAILS, SEE SHEET 3 OF 4.

SWEDGE ANCHOR BOLTS SHALL MEET THE REQUIREMENTS OF ASTM A449. ANCHOR PLATES, WASHERS, AND NUTS SHALL MEET THE REQUIREMENTS OF THE STANDARD SPECIFICATIONS. ANCHOR BOLTS, ANCHOR PLATES, WASHERS, AND NUTS SHALL BE GALVANIZED IN ACCORDANCE WITH THE STANDARD SPECIFICATIONS.

NO SEPARATE PAYMENT SHALL BE MADE FOR THE SWEDGE ANCHOR BOLTS, ANCHOR PLATES, WASHERS, AND NUTS. THE COST OF THE MATERIAL AND INSTALLATION SHALL BE CONSIDERED INCIDENTAL TO VARIOUS PAY ITEMS.

TOP OF PILE ELEVATIONS	
1	2521.28
2	2521.11
3	2520.95
4	2520.78
5	2520.62

PROJECT NO. HB-0050
ASHE COUNTY
STATION: 16+04.00 -L-

SHEET 2 OF 4

STATE OF NORTH CAROLINA
DEPARTMENT OF TRANSPORTATION
RALEIGH

SUBSTRUCTURE

END BENT No. 2

ASSEMBLED BY:	J. KEPICH	DATE :	07/25
CHECKED BY :	J. PAPCIAK	DATE :	09/25
DRAWN BY :	WJH 12/11	REV. 4/15	MAA/TMG
CHECKED BY :	AAC 12/11		

NORTH CAROLINA PROFESSIONAL SEAL 037903 ENGINEER JEFFREY M. KEPICH

Signed by: Jeffrey Kepich 7C5C71DBEF914E3... 6/12/2026

ms consultants, inc.
5444 Wade Park Blvd.
Suite 160
Raleigh, NC 27607
NC License Number : C-3239

DOCUMENT NOT CONSIDERED FINAL UNLESS ALL SIGNATURES COMPLETED

REVISIONS							
NO.	BY:	DATE:	NO.	BY:	DATE:	SHEET NO.	S1-18
1			3			TOTAL SHEETS	26
2			4				

STD. NO. EB_30_90S4

6/12/2026
c:\workdir\ncdot-pw.bentley.com_ncdot-pw-01\jeffrey kepich\d0529513\400_035_HB0050_SMU_E2_S1-18_040463.dgn
jkepich

Docusign Envelope ID: 1744488F-FDFB-8A99-8142-3188EE09531A

8/26/21

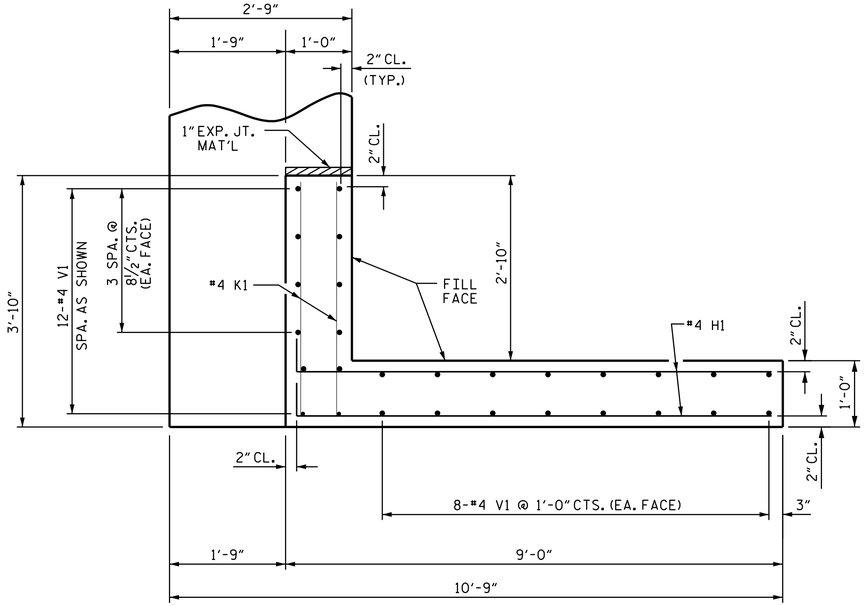

PLAN OF WING (W1)

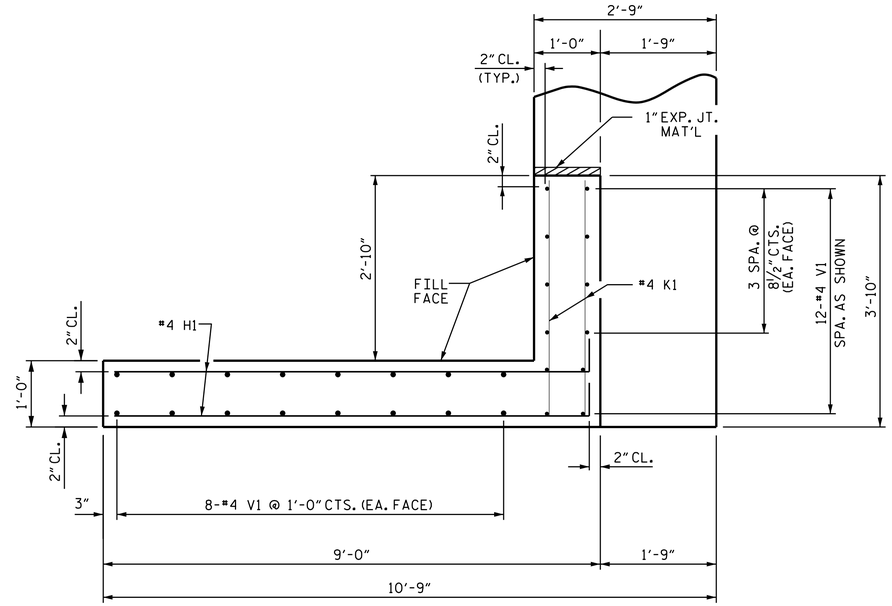

PLAN OF WING (W2)

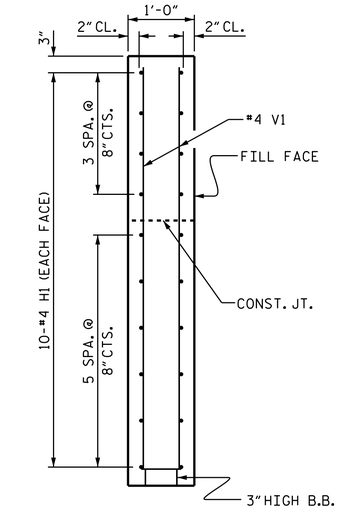

SECTION X-X

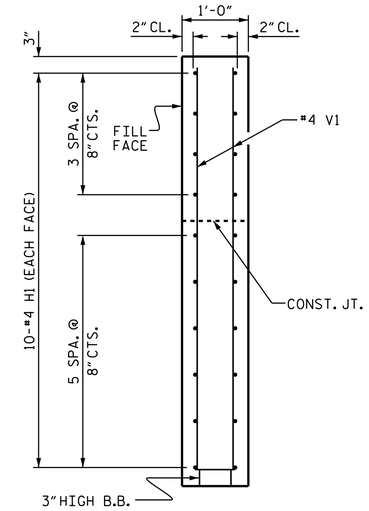

SECTION Y-Y

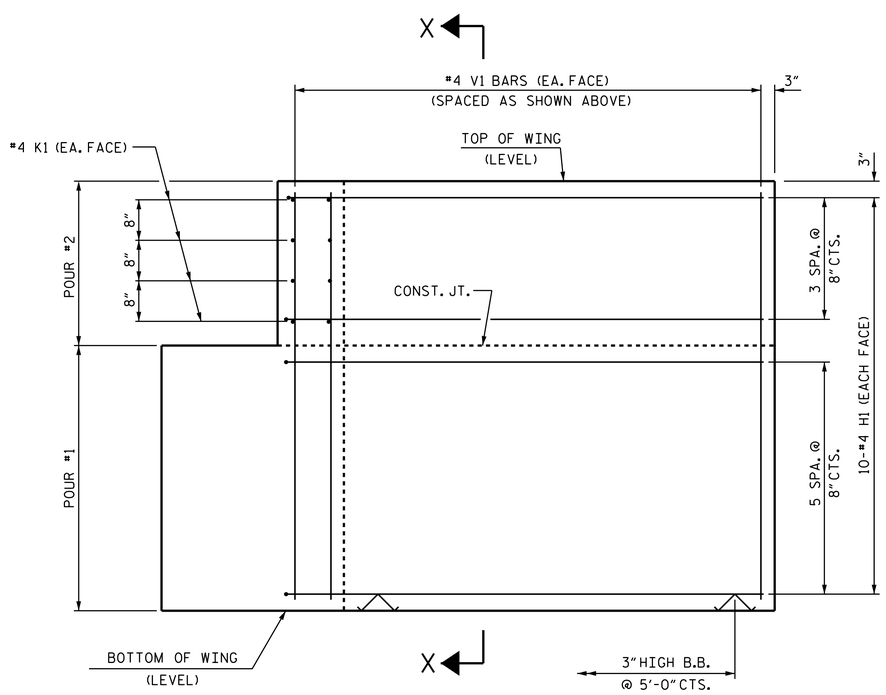

ELEVATION OF WING (W1)

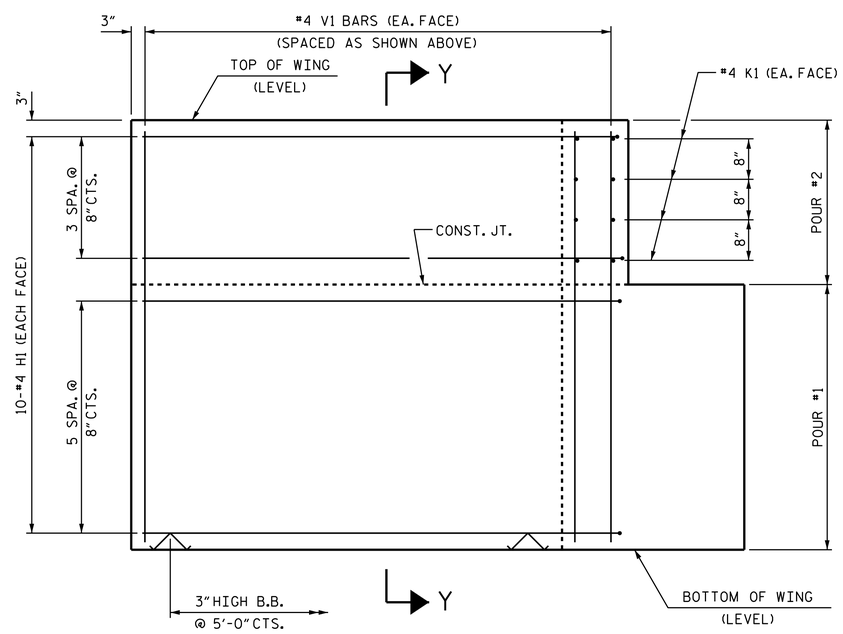

ELEVATION OF WING (W2)

WING DETAILS

PROJECT NO. HB-0050

ASHE COUNTY

STATION: 16+04.00 -L-

SHEET 3 OF 4

STATE OF NORTH CAROLINA
DEPARTMENT OF TRANSPORTATION
RALEIGH

SUBSTRUCTURE

END BENT
WING DETAILS

NORTH CAROLINA PROFESSIONAL SEAL 037903 ENGINEER JEFFREY M KEPICH

Signed by: Jeffrey Kepich 7C5C71DBEF914E3... 6/12/2026

ms consultants, inc.
5444 Wade Park Blvd.
Suite 160
Raleigh, NC 27607
NC License Number : C-3239

DOCUMENT NOT CONSIDERED FINAL UNLESS ALL SIGNATURES COMPLETED

REVISIONS						SHEET NO.
NO.	BY:	DATE:	NO.	BY:	DATE:	S1-19
1			3			TOTAL SHEETS
2			4			26

STD. NO. EB_30_90S4

ASSEMBLED BY:	J. KEPICH	DATE :	07/25
CHECKED BY :	J. PAPCIAK	DATE :	09/25
DRAWN BY :	WJH 12/11	REV. 4/15	MAA/TMG
CHECKED BY :	AAC 12/11		

6/12/2026
c:\workdir\ncdot-pw.bentley.com_ncdot-pw-01\jeffrey kepich\d0529513\400_037_HB0050_SMU_E3_S1-19_040463.dgn
jkepich

Docusign Envelope ID: 1744488F-FDFB-8A99-8142-3188EE09531A

8/26/21

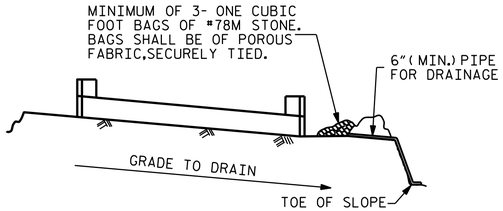

BAGGED STONE AND PIPE SHALL BE PLACED IMMEDIATELY AFTER COMPLETION OF END BENT EXCAVATION. PIPE MAY BE EITHER CONCRETE, CORRUGATED STEEL, CORRUGATED ALUMINUM ALLOY, OR CORRUGATED PLASTIC. PERFORATED PIPE WILL NOT BE ALLOWED.

BAGGED STONE SHALL REMAIN IN PLACE UNTIL THE ENGINEER DIRECTS THAT IT BE REMOVED. THE CONTRACTOR SHALL REMOVE AND DISPOSE OF SILT ACCUMULATIONS AT BAGGED STONE WHEN SO DIRECTED BY THE ENGINEER. BAGS SHALL BE REMOVED AND REPLACED WHENEVER THE ENGINEER DETERMINES THAT THEY HAVE DETERIORATED AND LOST THEIR EFFECTIVENESS.

NO SEPARATE PAYMENT WILL BE MADE FOR THIS WORK AND THE ENTIRE COST OF THIS WORK SHALL BE INCLUDED IN THE UNIT CONTRACT PRICE BID FOR THE SEVERAL PAY ITEMS.

TEMPORARY DRAINAGE AT END BENT

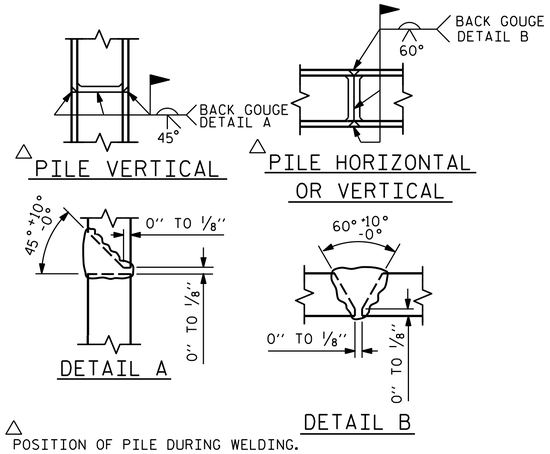

PILE SPLICE DETAILS

BAR TYPES

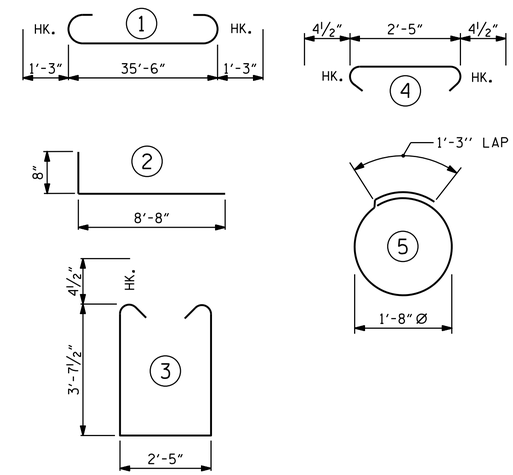

ALL BAR DIMENSIONS ARE OUT TO OUT.

END BENT No. 1	END BENT No. 2
HP 12 X 53 STEEL PILES NO: 5 LIN. FT.= 100.0	HP 12 X 53 STEEL PILES NO: 5 LIN. FT.= 90.0
PILE DRIVING EQUIPMENT SETUP FOR HP 12 X 53 STEEL PILES NO: 5	PILE DRIVING EQUIPMENT SETUP FOR HP 12 X 53 STEEL PILES NO: 5

BILL OF MATERIAL FOR ONE END BENT

BAR	NO.	SIZE	TYPE	LENGTH	WEIGHT
B1	8	#9	1	38'-0"	1034
B2	28	#4	STR	19'-1"	357
B3	9	#4	STR	2'-5"	15
H1	40	#4	2	9'-4"	249
K1	16	#4	STR	3'-5"	37
S1	46	#4	3	10'-5"	320
S2	46	#4	4	3'-2"	97
S3	20	#4	5	6'-6"	87
V1	56	#4	STR	6'-5"	240

REINFORCING STEEL (FOR ONE END BENT) 2436 LBS.

CLASS A CONCRETE BREAKDOWN (FOR ONE END BENT)

POUR #1 CAP, LOWER PART OF WINGS & COLLARS 17.9 C.Y.

POUR #2 UPPER PART OF WINGS 2.3 C.Y.

TOTAL CLASS A CONCRETE 20.2 C.Y.

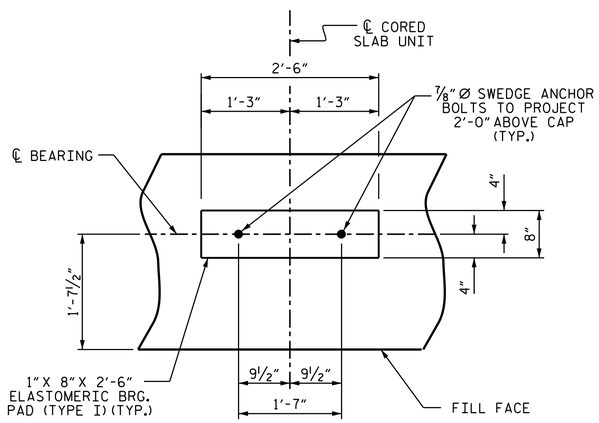

DETAIL "A"

(END BENT No. 1 SHOWN, END BENT No. 2 SIMILAR BY ROTATION)

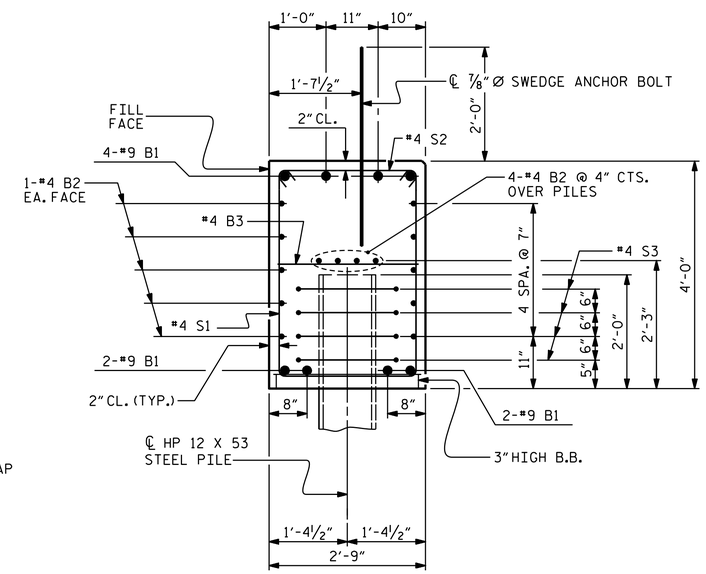

SECTION A-A

(CONCRETE COLLAR NOT SHOWN FOR CLARITY. SEE "CORROSION PROTECTION FOR STEEL PILES DETAIL.")

NOTES

SWEDGE ANCHOR BOLTS SHALL MEET THE REQUIREMENTS OF ASTM A449. ANCHOR PLATES, WASHERS, AND NUTS SHALL MEET THE REQUIREMENTS OF THE STANDARD SPECIFICATIONS. SWEDGE ANCHOR BOLTS, ANCHOR PLATES, WASHERS, AND NUTS SHALL BE GALVANIZED IN ACCORDANCE WITH THE STANDARD SPECIFICATIONS.

NO SEPARATE PAYMENT SHALL BE MADE FOR THE SWEDGE ANCHOR BOLTS, ANCHOR PLATES, WASHERS, AND NUTS. THE COST OF THE MATERIAL AND INSTALLATION SHALL BE CONSIDERED INCIDENTAL TO VARIOUS PAY ITEMS.

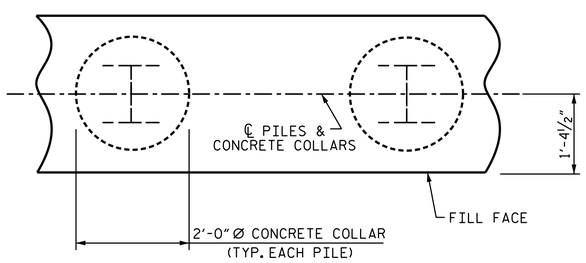

PLAN

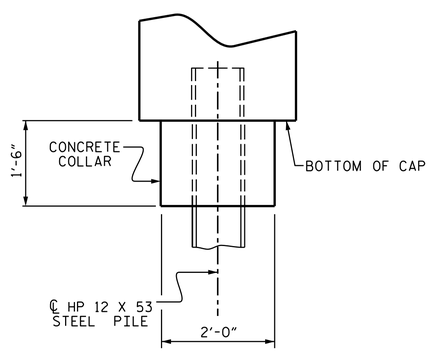

ELEVATION

CORROSION PROTECTION FOR STEEL PILES DETAIL

(END BENT No. 1 SHOWN, END BENT No. 2 SIMILAR BY ROTATION)

PROJECT NO. HB-0050

ASHE COUNTY

STATION: 16+04.00 -L-

SHEET 4 OF 4

STATE OF NORTH CAROLINA
DEPARTMENT OF TRANSPORTATION
RALEIGH

SUBSTRUCTURE

END BENT No. 1 & 2 DETAILS

NORTH CAROLINA PROFESSIONAL SEAL 037903 ENGINEER JEFFREY M KEPICH

Signed by: Jeffrey Kepich 7C5C71DBEF914E3... 6/12/2026

ms consultants, inc.
5444 Wade Park Blvd.
Suite 160
Raleigh, NC 27607
NC License Number : C-3239

DOCUMENT NOT CONSIDERED FINAL UNLESS ALL SIGNATURES COMPLETED

REVISIONS							SHEET NO.
NO.	BY:	DATE:	NO.	BY:	DATE:		S1-20
1			3				TOTAL SHEETS
2			4				26

ASSEMBLED BY:	J. KEPICH	DATE :	07/25
CHECKED BY :	J. PAPCIAK	DATE :	09/25
DRAWN BY :	WJH 12/11	REV. 4/15	MAA/TMG
CHECKED BY :	AAC 12/11		

6/12/2026
c:\workdir\ncdot-pw.bentley.com_ncdot-pw-01\jeffrey kepich\d0529513\400_039_HB0050_SMU_E4_S1-20_040463.dgn
jkepich

STD. NO. EB_30_90S4

Docusign Envelope ID: 1744488F-FDFB-8A99-8142-3188EE09531A

8/26/21

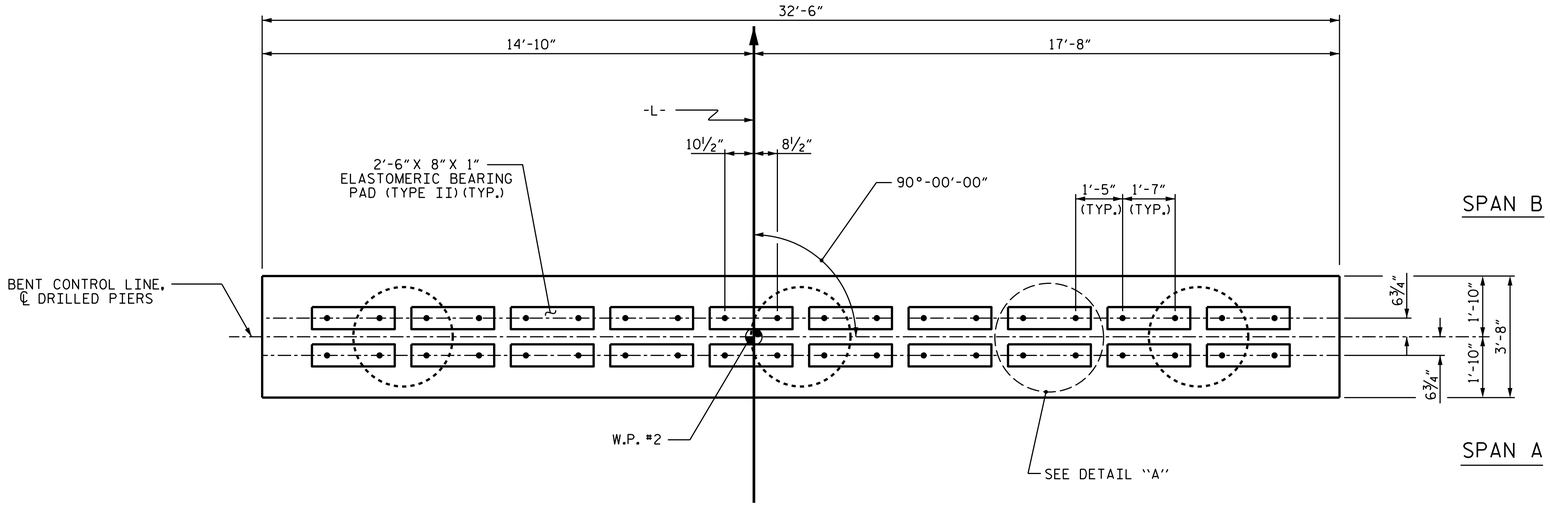

PLAN

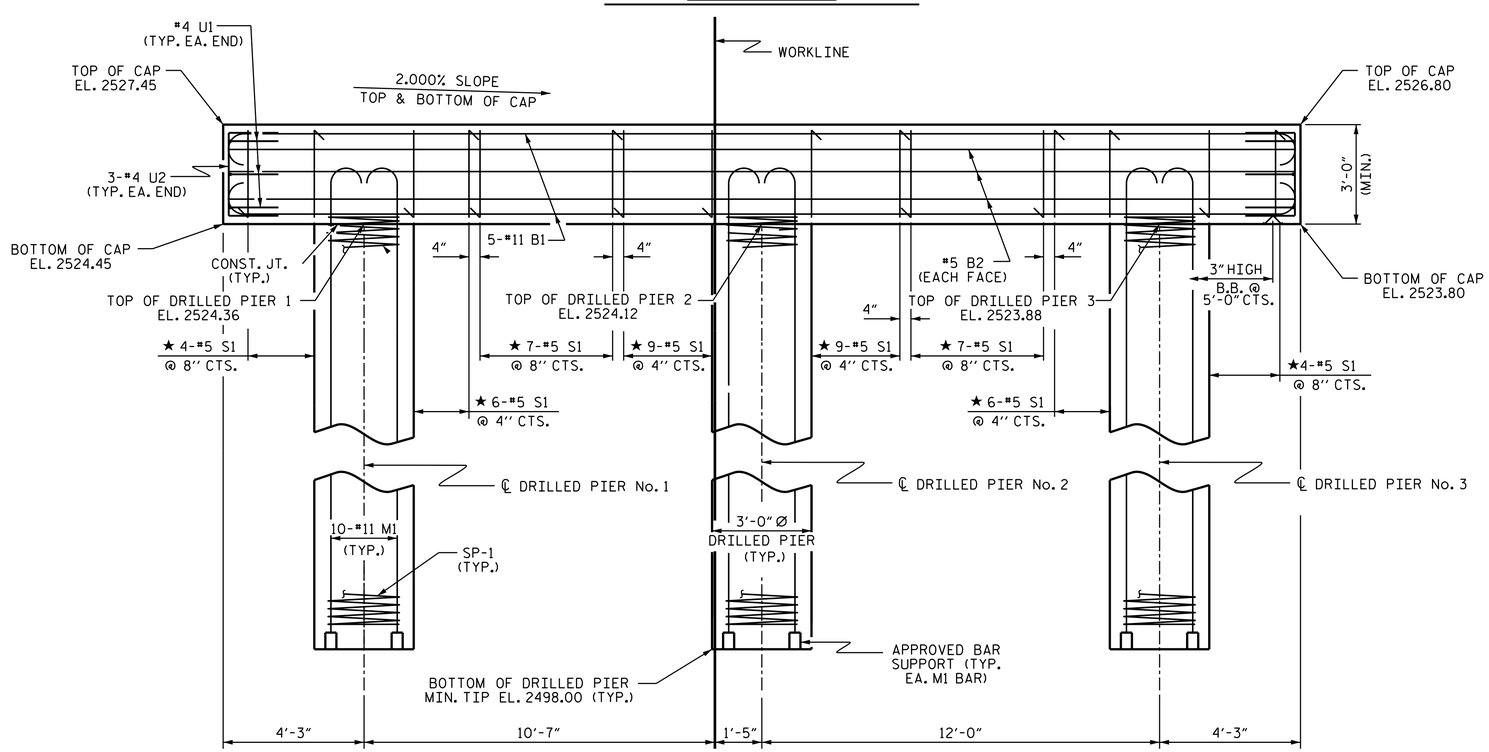

ELEVATION

DIMENSIONS & REINFORCING STEEL ARE TYPICAL FOR EACH DRILLED PIER UNLESS OTHERWISE NOTED.

NOTES

STIRRUPS IN CAP MAY BE SHIFTED AS NECESSARY TO CLEAR ANCHOR BOLT LOCATIONS.

HOOKS ON "V" BARS MAY BE TURNED AS NECESSARY FOR PLACING REINFORCING STEEL.

FOR DRILLED PIERS, SEE SECTION 411 OF THE STANDARD SPECIFICATIONS.

ALL STEEL IN THE DRILLED PIERS IS INCLUDED IN THE PAY ITEMS FOR "REINFORCING STEEL" AND "SPIRAL COLUMN REINFORCING STEEL."

★ INVERT ALTERNATE STIRRUPS.

DRILLED PIERS SHALL BE TERMINATED ONE FOOT ± ABOVE NORMAL WATER SURFACE ELEVATION FOR SHAFTS LOCATED IN WATER.

THE CONTRACTOR'S ATTENTION IS CALLED TO THE FACT THAT THE LONGITUDINAL REINFORCEMENT FOR DRILLED PIERS IS DETAILED WITH 3 FEET OF EXTRA LENGTH. AS THERE IS NO SPLICE, VERIFY THE "M" BAR LENGTH INTO THE CAP PRIOR TO POURING THE DRILLED PIER CONCRETE AND CUT AS NECESSARY MAINTAINING THE NECESSARY EMBEDMENT INTO THE CAP AS PER PLANS.

SWEDGE ANCHOR BOLTS SHALL MEET THE REQUIREMENTS OF ASTM A449. ANCHOR PLATES, WASHERS, AND NUTS SHALL MEET THE REQUIREMENTS OF THE STANDARD SPECIFICATIONS. SWEDGE ANCHOR BOLTS, ANCHOR PLATES, WASHERS, AND NUTS SHALL BE GALVANIZED IN ACCORDANCE WITH THE STANDARD SPECIFICATIONS.

NO SEPARATE PAYMENT SHALL BE MADE FOR THE SWEDGE ANCHOR BOLTS, ANCHOR PLATES, WASHERS, AND NUTS. THE COST OF THE MATERIAL AND INSTALLATION SHALL BE CONSIDERED INCIDENTAL TO VARIOUS PAY ITEMS.

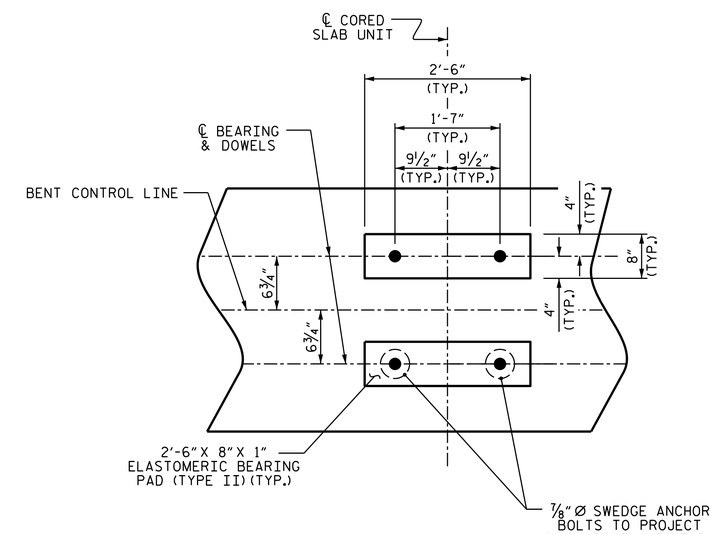

DETAIL "A"

(DIMENSIONS ARE TYPICAL EACH BEARING)

PROJECT NO. **HB-0050**

ASHE COUNTY

STATION: **16+04.00 -L-**

SHEET 1 OF 2

STATE OF NORTH CAROLINA
DEPARTMENT OF TRANSPORTATION
RALEIGH

SUBSTRUCTURE
BENT No. 1

NORTH CAROLINA PROFESSIONAL SEAL 037903 ENGINEER JEFFREY M KEPICH

Signed by: Jeffrey Kepich 7C5C71DBEF914E3... 6/12/2026

ms consultants, inc.
5444 Wade Park Blvd.
Suite 160
Raleigh, NC 27607
NC License Number : C-3239

DOCUMENT NOT CONSIDERED FINAL UNLESS ALL SIGNATURES COMPLETED

REVISIONS						SHEET NO.
NO.	BY:	DATE:	NO.	BY:	DATE:	S1-21
1			3			TOTAL SHEETS
2			4			26

ASSEMBLED BY: J. KEPICH		DATE :	07/25
CHECKED BY : J. PAPCIAK		DATE :	02/26
DRAWN BY : DGE 4/10	REV. 11/14	MAA/TMG	
CHECKED BY : MKT 4/10			

6/12/2026
c:\workdir\ncdot-pw.bentley.com_ncdot-pw-01\jeffrey kepich\d0529513\400_041_HB0050_SMU_B1_S1-21_040463.dgn
jkepich

Docusign Envelope ID: 1744488F-FDFB-8A99-8142-3188EE09531A

8/26/21

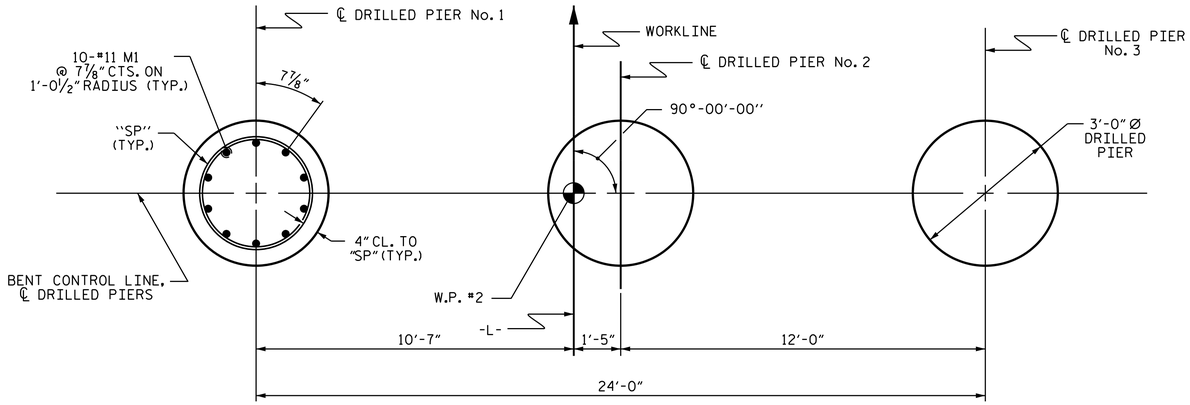

PLAN OF DRILLED PIERS

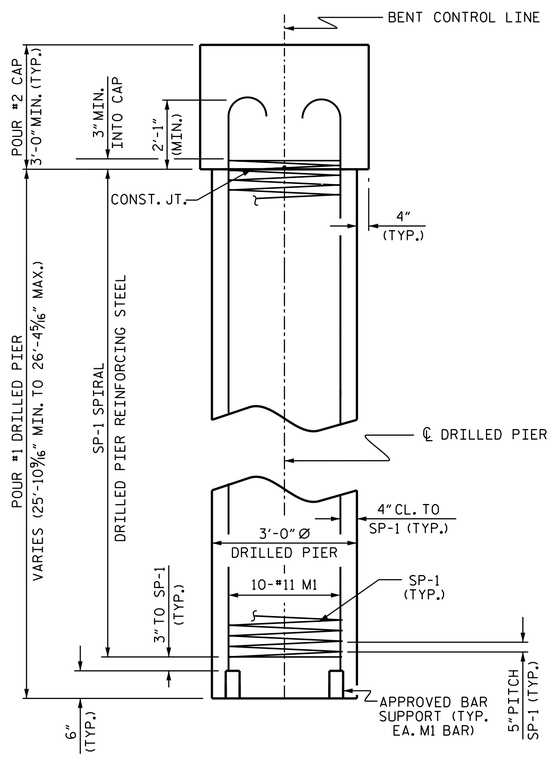

END ELEVATION

BAR TYPES

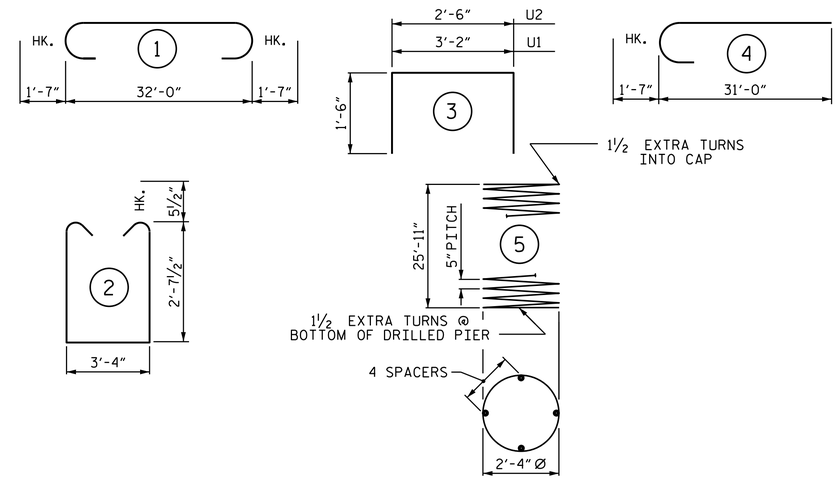

ALL BAR DIMENSIONS ARE OUT TO OUT

BILL OF MATERIAL
FOR ONE BENT

BAR	NO.	SIZE	TYPE	LENGTH	WEIGHT
B1	10	#11	1	35'-2"	1868
B2	6	#5	STR	32'-2"	201
M1	30	#11	4	32'-7"	5193
S1	52	#5	2	9'-6"	515
U1	6	#4	3	6'-2"	25
U2	6	#4	3	5'-6"	22

REINFORCING STEEL
(FOR ONE BENT) 7824 LBS.

SP-1	3	*	5	467'-1"	1462

SPIRAL REINFORCING STEEL
(FOR ONE BENT) 1462 LBS.

* THE SP-1 SPIRAL REINFORCING STEEL SHALL BE W31 OR D-31 COLD DRAWN WIRE OR #5 PLAIN OR DEFORMED BAR

CLASS A CONCRETE BREAKDOWN
(FOR ONE BENT)

POUR #2 (CAP) 13.3 C.Y.

TOTAL CLASS A CONCRETE 13.3 C.Y.

DRILLED PIERS:
(FOR ONE BENT)

DRILLED PIER CONCRETE
POUR #1 (DRILLED PIERS) 20.6 C.Y.

3'-0" Ø DRILLED PIER LENGTH
(APPROX. PER BENT) 79.5 LIN. FT.

PERMANENT STEEL CASING FOR
3'-0" Ø DRILLED PIER 30.0 LIN. FT.

CSL TUBES 1 EA.

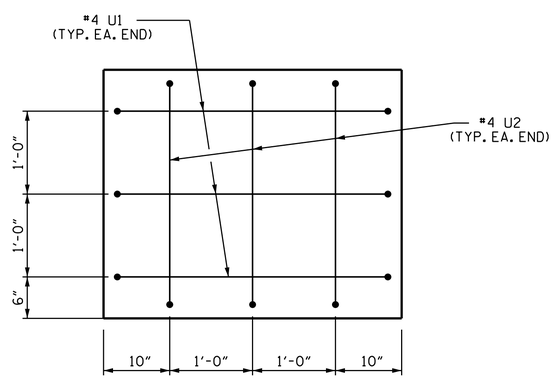

END OF CAP VIEW
(TYPICAL BOTH ENDS)

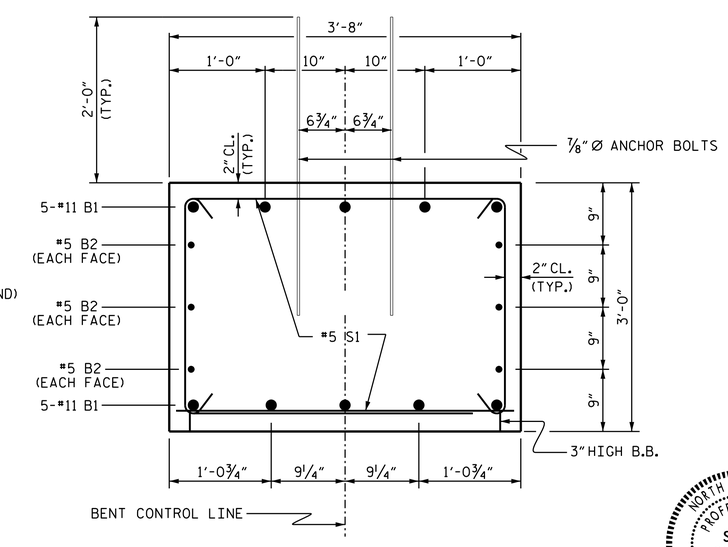

SECTION THRU CAP

PROJECT NO. HB-0050
ASHE COUNTY
STATION: 16+04.00 -L-

SHEET 2 OF 2

STATE OF NORTH CAROLINA
DEPARTMENT OF TRANSPORTATION
RALEIGH

SUBSTRUCTURE

BENT No. 1

NORTH CAROLINA PROFESSIONAL SEAL 037903 ENGINEER JEFFREY M KEPICH

Signed by: Jeffrey Kepich 7C5C71DBEF914E3... 6/12/2026

ms consultants, inc.
5444 Wade Park Blvd.
Suite 160
Raleigh, NC 27607
NC License Number : C-3239

DOCUMENT NOT CONSIDERED FINAL UNLESS ALL SIGNATURES COMPLETED

REVISIONS						SHEET NO.
NO.	BY:	DATE:	NO.	BY:	DATE:	S1-22
1			3			TOTAL SHEETS
2			4			26

ASSEMBLED BY:	J. KEPICH	DATE :	07/25
CHECKED BY :	J. PAPCIAK	DATE :	02/26
DRAWN BY :	DGE 3/10	REV. 11/14	MAA/TMG
CHECKED BY :	MKT 3/10		

6/12/2026
c:\workdir\ncdot-pw.bentley.com_ncdot-pw-01\jeffrey kepich\d0529513\400_043_HB0050_SMU_B2_S1-22_040463.dgn
jkepich

STD. NO. DP_BT_30_90S_<50'

Docusign Envelope ID: 1744488F-FDFB-8A99-8142-3188EE09531A

8/26/21

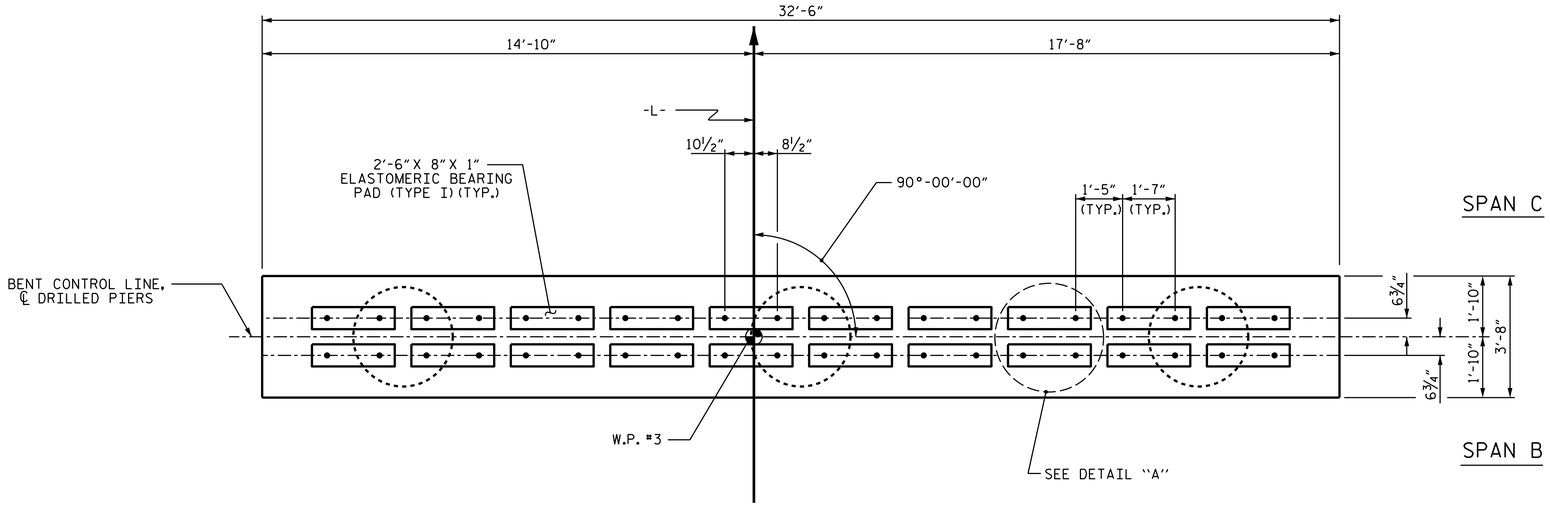

PLAN

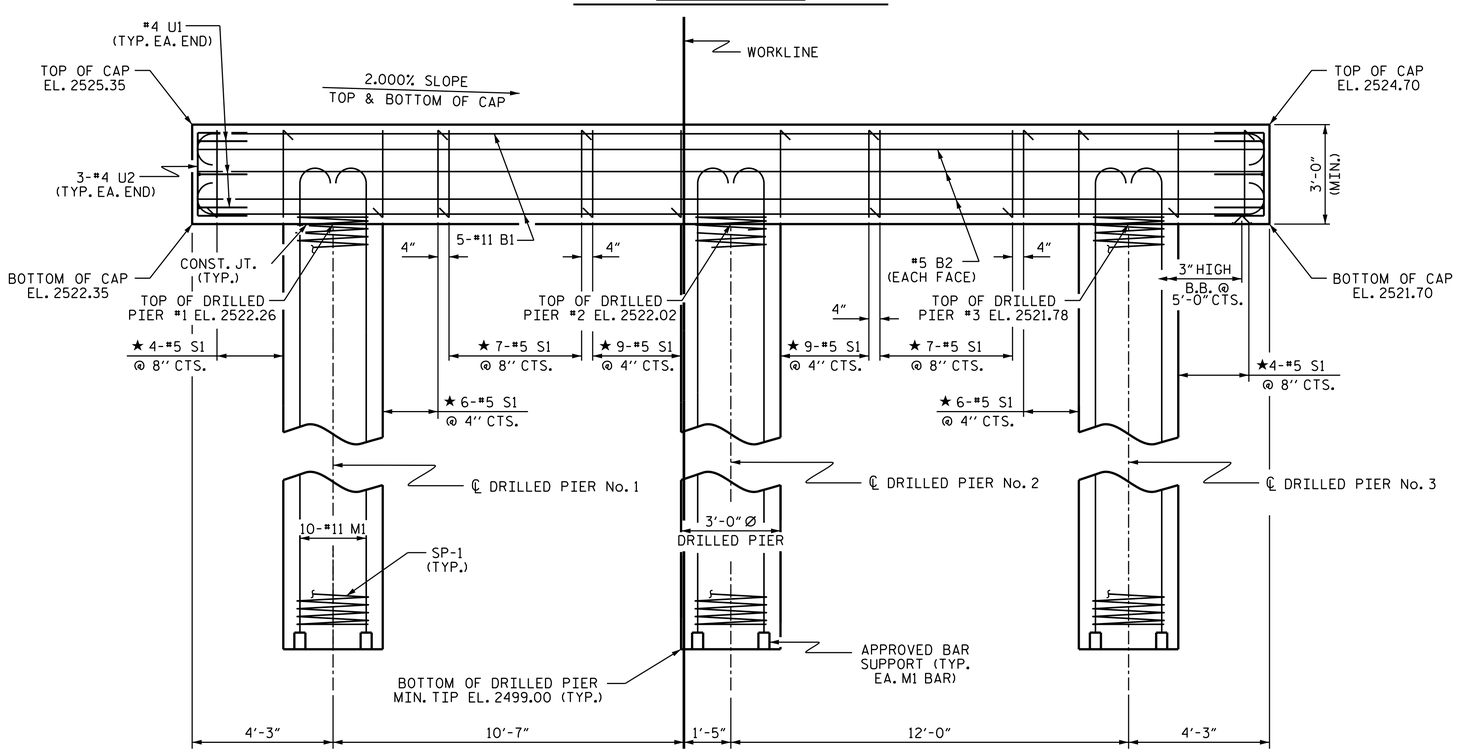

ELEVATION

DIMENSIONS & REINFORCING STEEL ARE TYPICAL FOR EACH COLUMN & DRILLED PIER UNLESS OTHERWISE NOTED.

NOTES

STIRRUPS IN CAP MAY BE SHIFTED AS NECESSARY TO CLEAR ANCHOR BOLT LOCATIONS.

HOOKS ON "V" BARS MAY BE TURNED AS NECESSARY FOR PLACING REINFORCING STEEL.

FOR DRILLED PIERS, SEE SECTION 411 OF THE STANDARD SPECIFICATIONS.

ALL STEEL IN THE DRILLED PIERS IS INCLUDED IN THE PAY ITEMS FOR "REINFORCING STEEL" AND "SPIRAL COLUMN REINFORCING STEEL."

★ INVERT ALTERNATE STIRRUPS.

DRILLED PIERS SHALL BE TERMINATED ONE FOOT ± ABOVE NORMAL WATER SURFACE ELEVATION FOR SHAFTS LOCATED IN WATER.

THE CONTRACTOR'S ATTENTION IS CALLED TO THE FACT THAT THE LONGITUDINAL REINFORCEMENT FOR DRILLED PIERS IS DETAILED WITH 3 FEET OF EXTRA LENGTH. AS THERE IS NO SPLICE, VERIFY THE "M" BAR LENGTH INTO THE CAP PRIOR TO POURING THE DRILLED PIER CONCRETE AND CUT AS NECESSARY MAINTAINING THE NECESSARY EMBEDMENT INTO THE CAP AS PER PLANS.

SWEDGE ANCHOR BOLTS SHALL MEET THE REQUIREMENTS OF ASTM A449. ANCHOR PLATES, WASHERS, AND NUTS SHALL MEET THE REQUIREMENTS OF THE STANDARD SPECIFICATIONS. SWEDGE ANCHOR BOLTS, ANCHOR PLATES, WASHERS, AND NUTS SHALL BE GALVANIZED IN ACCORDANCE WITH THE STANDARD SPECIFICATIONS.

NO SEPARATE PAYMENT SHALL BE MADE FOR THE SWEDGE ANCHOR BOLTS, ANCHOR PLATES, WASHERS, AND NUTS. THE COST OF THE MATERIAL AND INSTALLATION SHALL BE CONSIDERED INCIDENTAL TO VARIOUS PAY ITEMS.

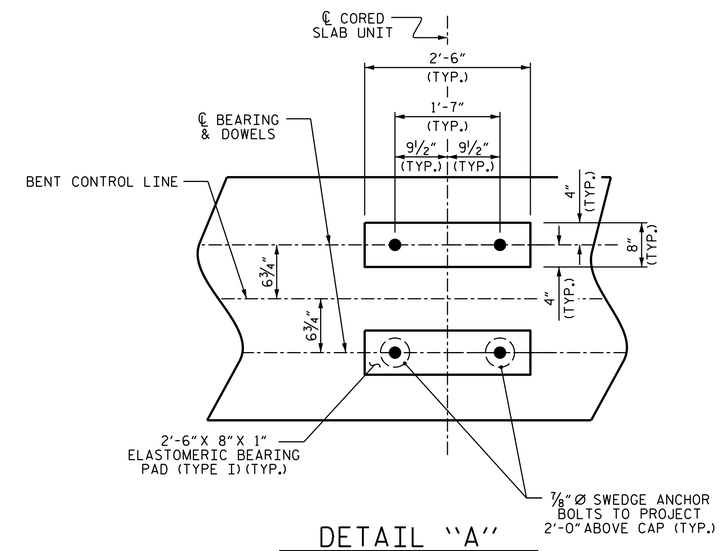

DETAIL "A"

(DIMENSIONS ARE TYPICAL EACH BEARING)

PROJECT NO. HB-0050

ASHE COUNTY

STATION: 16+04.00 -L-

SHEET 1 OF 2

STATE OF NORTH CAROLINA
DEPARTMENT OF TRANSPORTATION
RALEIGH

SUBSTRUCTURE
BENT No. 2

NORTH CAROLINA PROFESSIONAL SEAL 037903 ENGINEER JEFFREY M KEPICH

Signed by: Jeffrey Kepich 7C5C71DBEF914E3... 6/12/2026

ms consultants, inc.
5444 Wade Park Blvd.
Suite 160
Raleigh, NC 27607
NC License Number : C-3239

DOCUMENT NOT CONSIDERED FINAL UNLESS ALL SIGNATURES COMPLETED

REVISIONS						SHEET NO.
NO.	BY:	DATE:	NO.	BY:	DATE:	S1-23
1			3			TOTAL SHEETS
2			4			26

ASSEMBLED BY:	J. KEPICH	DATE :	07/25
CHECKED BY :	J. PAPCIAK	DATE :	02/26
DRAWN BY :	DGE 4/10	REV. II/14	MAA/TMG
CHECKED BY :	MKT 4/10		

6/12/2026
c:\workdir\ncdot-pw.bentley.com_ncdot-pw-01\jeffrey kepich\d0529513\400_045_HB0050_SMU_B3_S1-23_040463.dgn
jkepich

STD. NO. DP_BT_30_90S_<50'

Docusign Envelope ID: 1744488F-FDFB-8A99-8142-3188EE09531A

8/26/21

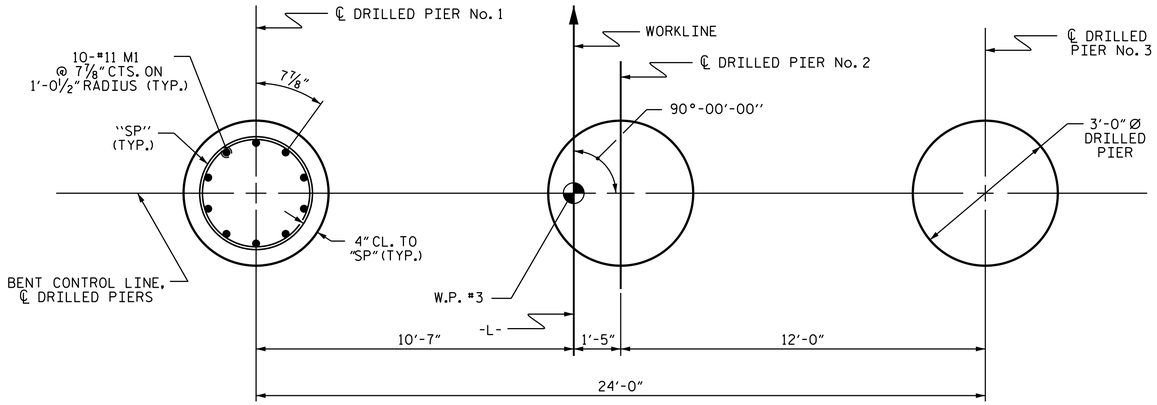

PLAN OF DRILLED PIERS

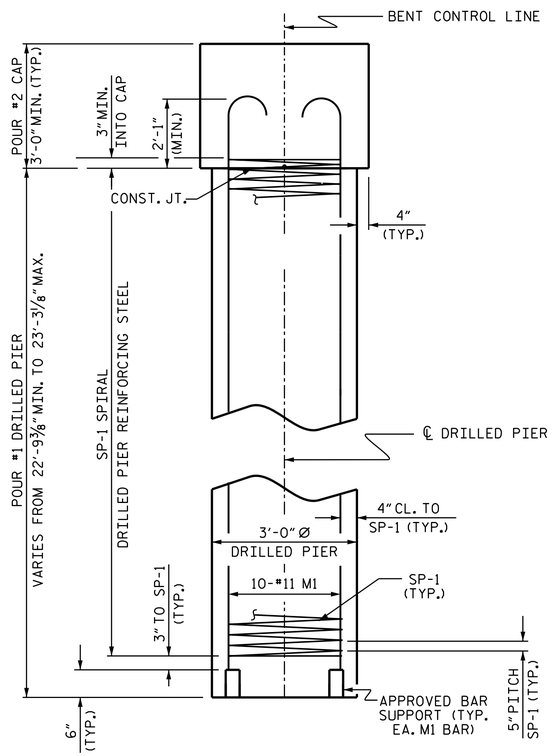

END ELEVATION

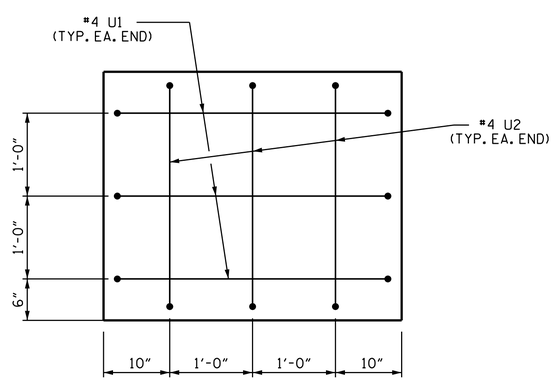

END OF CAP VIEW

(TYPICAL BOTH ENDS)

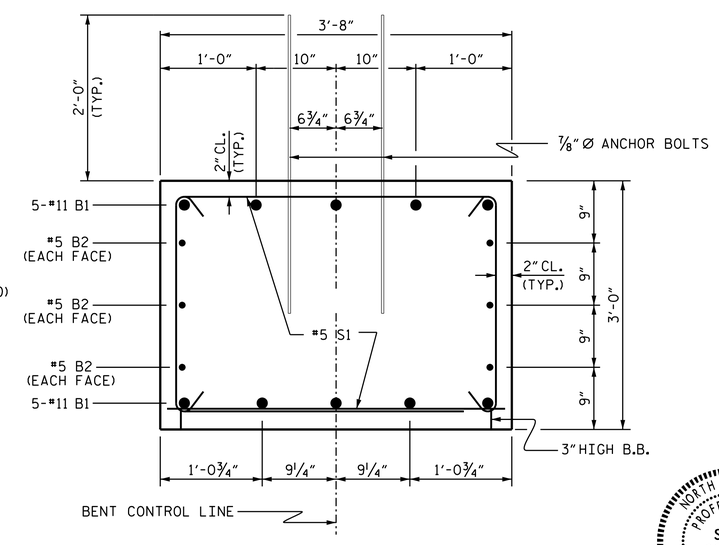

SECTION THRU CAP

BAR TYPES

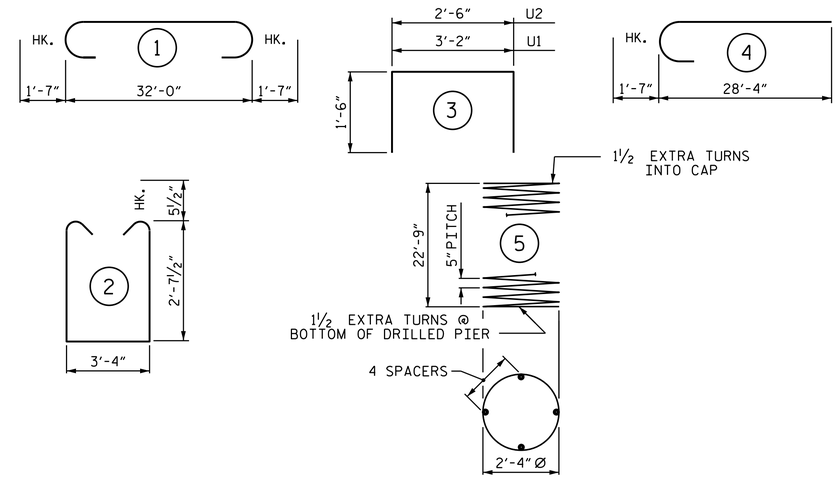

ALL BAR DIMENSIONS ARE OUT TO OUT

BILL OF MATERIAL
FOR ONE BENT

BAR	NO.	SIZE	TYPE	LENGTH	WEIGHT
B1	10	#11	1	35'-2"	1868
B2	6	#5	STR	32'-2"	201
M1	30	#11	4	29'-11"	4768
S1	52	#5	2	9'-6"	515
U1	6	#4	3	6'-2"	25
U2	6	#4	3	5'-6"	22

REINFORCING STEEL (FOR ONE BENT) 7399 LBS.

SP-1	3	*	5	413'-8"	1294 LBS.

SPIRAL COLUMN REINFORCING STEEL (FOR ONE BENT) 1294 LBS.

* THE SP-1 SPIRAL REINFORCING STEEL SHALL BE W31 OR D-31 COLD DRAWN WIRE OR #5 PLAIN OR DEFORMED BAR

CLASS A CONCRETE BREAKDOWN (FOR ONE BENT)

POUR #2 (CAP) 13.3 C.Y.

TOTAL CLASS A CONCRETE 13.3 C.Y.

DRILLED PIERS: (FOR ONE BENT)

DRILLED PIER CONCRETE
POUR #1 (DRILLED PIERS) 18.1 C.Y.

3'-0" Ø DRILLED PIER LENGTH (PER BENT) 69.0 LIN. FT.

PERMANENT STEEL CASING FOR 3'-0" Ø DRILLED PIER 30.0 LIN. FT.

CSL TUBES 1 EA.

PROJECT NO. HB-0050
ASHE COUNTY
STATION: 16+04.00 -L-

SHEET 2 OF 2

STATE OF NORTH CAROLINA
DEPARTMENT OF TRANSPORTATION
RALEIGH

SUBSTRUCTURE

BENT No. 2

NORTH CAROLINA PROFESSIONAL SEAL 037903 ENGINEER JEFFREY M KEPICH

Signed by: Jeffrey Kepich 7C5C71DBEF914E3... 6/12/2026

ms consultants, inc.
5444 Wade Park Blvd.
Suite 160
Raleigh, NC 27607
NC License Number : C-3239

DOCUMENT NOT CONSIDERED FINAL UNLESS ALL SIGNATURES COMPLETED

REVISIONS						SHEET NO.
NO.	BY:	DATE:	NO.	BY:	DATE:	S1-24
1			3			TOTAL SHEETS
2			4			26

ASSEMBLED BY:	J. KEPICH	DATE :	07/25
CHECKED BY :	J. PAPCIAK	DATE :	02/26
DRAWN BY :	DGE 3/10	REV. 11/14	MAA/TMG
CHECKED BY :	MKT 3/10		

6/12/2026
c:\workdir\ncdot-pw.bentley.com_ncdot-pw-01\jeffrey kepich\d0529513\400_047_HB0050_SMU_B4_S1-24_040463.dgn
jkepich

STD. NO. DP_BT_30_90S_<50'

Docusign Envelope ID: 1744488F-FDFB-8A99-8142-3188EE09531A

8/26/21

NOTES :

FOR BERM WIDTH DIMENSIONS, SEE GENERAL DRAWING.

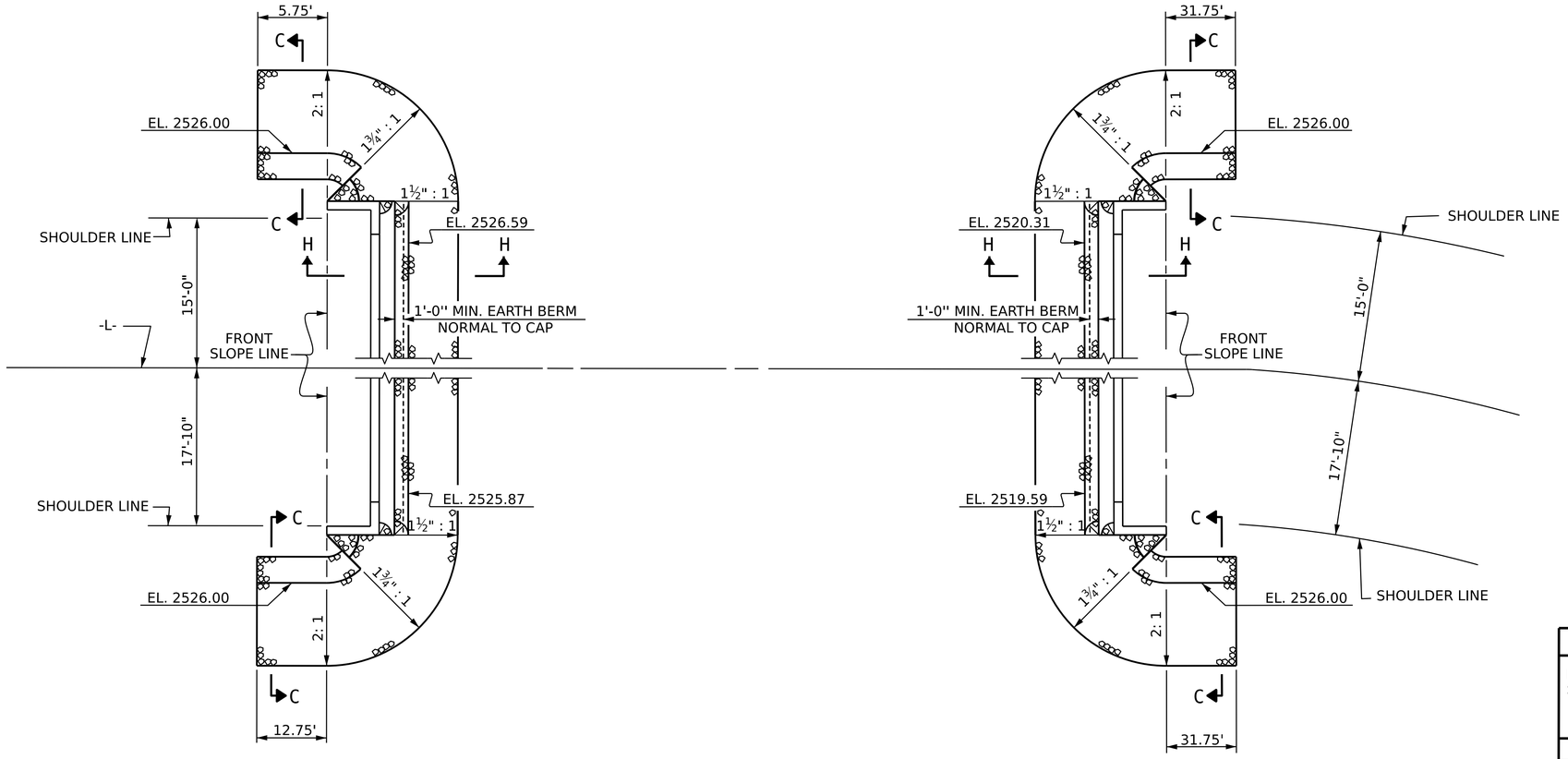

END BENT 1

RIP RAP PLAN

END BENT 2

ESTIMATED QUANTITIES		
BRIDGE @ STA. 16+04.00 -L-	RIP RAP CLASS II (2'-0" THICK)	GEOTEXTILE FOR DRAINAGE
	TONS	SQUARE YARDS
END BENT 1	49	54
END BENT 2	93	103

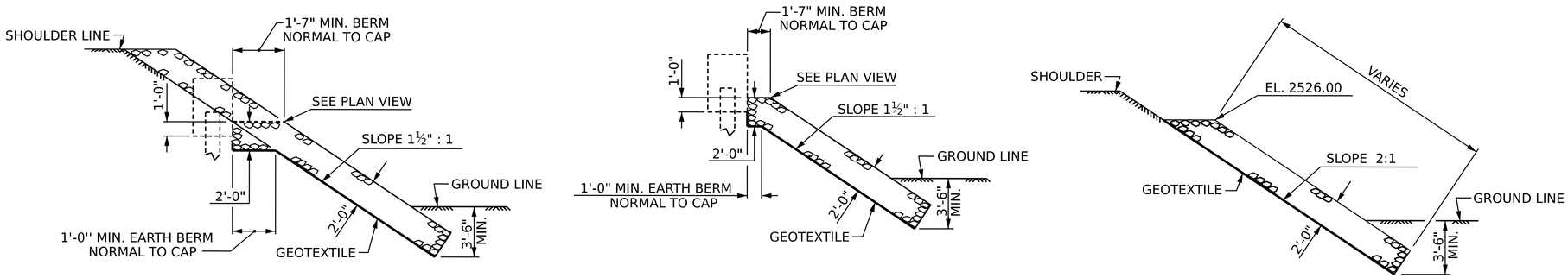

SECTION H-H

℄ SECTION

SECTION C-C

BERM RIP RAPPED

PROJECT NO. HB-0050

ASHE COUNTY

STATION: 16+04.00 -L-

STATE OF NORTH CAROLINA
DEPARTMENT OF TRANSPORTATION
RALEIGH

STANDARD

RIP RAP DETAILS

NORTH CAROLINA PROFESSIONAL SEAL 037903 ENGINEER JEFFREY M. KEPICH

Signed by: Jeffrey Kepich 7C6C71DBEF914E3... 6/12/2026

ms consultants, inc.
5444 Wade Park Blvd.
Suite 160
Raleigh, NC 27607
NC License Number : C-3239

DOCUMENT NOT CONSIDERED FINAL UNLESS ALL SIGNATURES COMPLETED

REVISIONS							SHEET NO.
NO.	BY:	DATE:	NO.	BY:	DATE:		S1-25
1			3				TOTAL SHEETS
2			4				26

ASSEMBLED BY:	J. KEPICH		DATE :	07/25
CHECKED BY :	J. PAPCIAK		DATE :	09/25
DRAWN BY :	REK	1/84	REV. 10/1/11	MAA/GM
CHECKED BY :	RDU	1/84	REV. 12/21/11	MAA/GM
			REV. 12/17	MAA/THC

6/12/2026
c:\workdir\ncdot-pw.bentley.com_ncdot-pw-01\jeffrey kepich\d0529513\400_049_HB0050_SMU_RR_S1-25_040463.dgn
jkepich

STD. NO. RR1 Sht. 2

Docusign Envelope ID: 1744488F-FDFB-8A99-8142-3188EE09531A

8/26/21

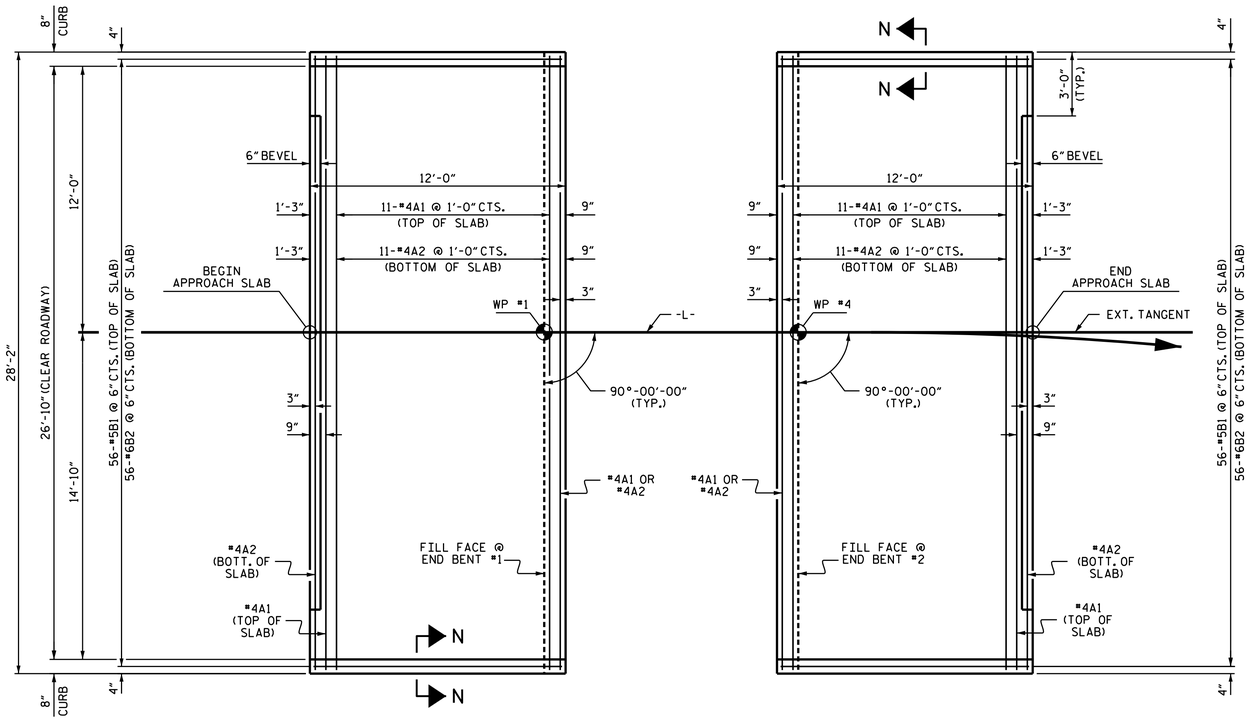

PLAN @ END BENT #1

PLAN @ END BENT #2

DIMENSIONS SHOWN ARE TYPICAL FOR BOTH APPROACH SLABS

NOTES

FOR BRIDGE APPROACH FILL, SEE ROADWAY PLANS.

AREA BETWEEN THE WINGWALL AND APPROACH SLAB SHALL BE GRADED TO DRAIN THE WATER AWAY FROM THE FILL FACE OF THE BRIDGE AND SHALL BE PAVED. SEE ROADWAY PLANS.

APPROACH SLABS SHALL BE POURED AFTER CONCRETE WEARING SURFACE IS POURED

THE JOINT OPENING AT THE APPROACH SLAB/DECK INTERFACE SHALL BE SAWED NO MORE THAN 12 HOURS AFTER THE APPROACH SLAB IS CAST. THE JOINT SHALL BE CLEANED OF ALL DEBRIS BEFORE THE SEALANT IS APPLIED. THE JOINT SEALER MATERIAL SHALL CONFORM TO THE REQUIREMENTS OF SECTION 1028-3 OF THE STANDARD SPECIFICATIONS

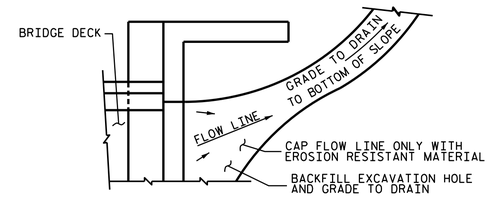

NOTE: IF THE APPROACH SLAB IS NOT CONSTRUCTED IMMEDIATELY AFTER THE BACKFILLING OF THE END BENT EXCAVATION, GRADE TO DRAIN TO THE BOTTOM OF THE SLOPE AND PROVIDE EROSION RESISTANT MATERIAL, SUCH AS FIBERGLASS ROVING OR AS DIRECTED BY THE ENGINEER TO PREVENT SOIL EROSION AND TO PROTECT THE AREA ADJACENT TO THE STRUCTURE. THE CONTRACTOR WILL BE REQUIRED TO REMOVE THESE MATERIALS PRIOR TO CONSTRUCTION OF THE APPROACH SLAB.

TEMPORARY DRAINAGE DETAIL

BILL OF MATERIAL

APPROACH SLAB AT EB #1

BAR	NO.	SIZE	TYPE	LENGTH	WEIGHT
* A1	13	#4	STR	27'-10"	242
A2	13	#4	STR	27'-10"	242
* B1	56	#5	STR	11'-2"	652
B2	56	#6	STR	11'-8"	981
REINFORCING STEEL				LBS.	1223
* EPOXY COATED REINFORCING STEEL				LBS.	894
CLASS AA CONCRETE				C.Y.	18.1

APPROACH SLAB AT EB #2

BAR	NO.	SIZE	TYPE	LENGTH	WEIGHT
* A1	13	#4	STR	27'-10"	242
A2	13	#4	STR	27'-10"	242
* B1	56	#5	STR	11'-2"	652
B2	56	#6	STR	11'-8"	981
REINFORCING STEEL				LBS.	1223
* EPOXY COATED REINFORCING STEEL				LBS.	894
CLASS AA CONCRETE				C.Y.	18.1

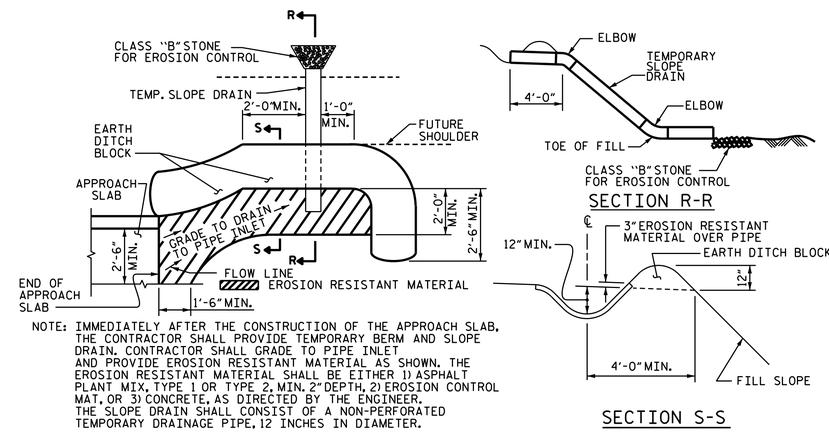

NOTE: IMMEDIATELY AFTER THE CONSTRUCTION OF THE APPROACH SLAB, THE CONTRACTOR SHALL PROVIDE TEMPORARY BERM AND SLOPE DRAIN. CONTRACTOR SHALL GRADE TO PIPE INLET AND PROVIDE EROSION RESISTANT MATERIAL AS SHOWN. THE EROSION RESISTANT MATERIAL SHALL BE EITHER 1) ASPHALT PLANT MIX, TYPE 1 OR TYPE 2, MIN. 2" DEPTH, 2) EROSION CONTROL MAT, OR 3) CONCRETE, AS DIRECTED BY THE ENGINEER. THE SLOPE DRAIN SHALL CONSIST OF A NON-PERFORATED TEMPORARY DRAINAGE PIPE, 12 INCHES IN DIAMETER.

TEMPORARY BERM AND SLOPE DRAIN DETAILS

(TO BE USED WHEN SHOULDER BERM GUTTER IS REQUIRED)

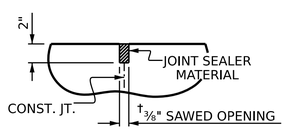

DETAIL "A"

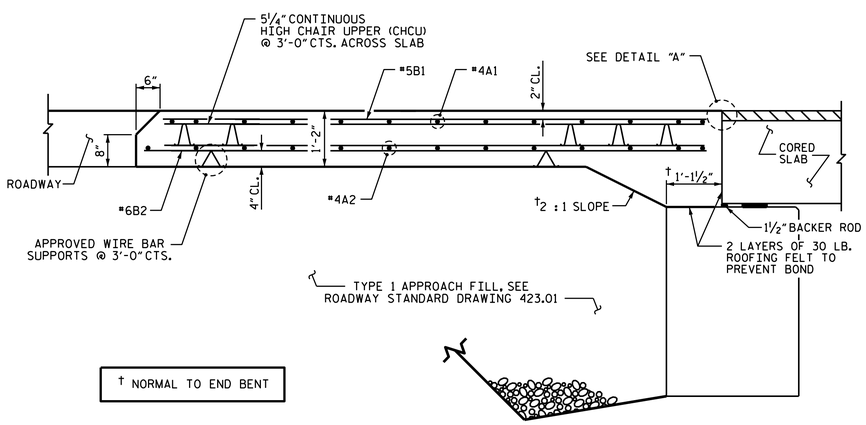

† NORMAL TO END BENT

SECTION THRU SLAB

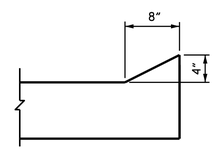

SECTION N-N

CURB DETAILS

PROJECT NO. HB-0050

ASHE COUNTY

STATION: 16+04.00 -L-

SPLICE LENGTHS		
BAR SIZE	EPOXY COATED	UNCOATED
#4	1'-11"	1'-7"
#5	2'-5"	2'-0"
#6	3'-7"	2'-5"

NORTH CAROLINA PROFESSIONAL SEAL 037903 ENGINEER JEFFREY M. KEPICH

Signed by: Jeffrey Kepich 6/12/2026
7C5C71DBEF914E3...

ms consultants, inc.
5444 Wade Park Blvd.
Suite 160
Raleigh, NC 27607
NC License Number : C-3239

DOCUMENT NOT CONSIDERED FINAL UNLESS ALL SIGNATURES COMPLETED

STATE OF NORTH CAROLINA
DEPARTMENT OF TRANSPORTATION
RALEIGH

STANDARD
BRIDGE APPROACH SLAB
FOR PRESTRESSED CONCRETE
CORED SLAB UNIT
(SUB-REGIONAL TIER)
90° SKEW

REVISIONS						SHEET NO.
NO.	BY:	DATE:	NO.	BY:	DATE:	S1-26
1			3			TOTAL SHEETS
2			4			26

STD. NO. BAS_30_90S

ASSEMBLED BY: J. KEPICH		DATE : 07/25	
CHECKED BY : J. PAPCIAK		DATE : 09/25	
DRAWN BY : SHS/MAA	5-09	REV. 08-19	BNB/THC
CHECKED BY : BCH	5-09	REV. 01-25	HRS

6/12/2026
c:\workdir\ncdot-pw.bentley.com_ncdot-pw-01\jeffrey kepich\d0529513\400_051_HB0050_SMU_AS_S1-26_040463.dgn
jkepich

STANDARD NOTES

DESIGN DATA:

SPECIFICATIONS	AASHTO (CURRENT)
LIVE LOAD	SEE PLANS
IMPACT ALLOWANCE	SEE AASHTO
STRESS IN EXTREME FIBER OF STRUCTURAL STEEL - AASHTO M270 GRADE 36	20,000 LBS. PER SQ. IN.
- AASHTO M270 GRADE 50W	27,000 LBS. PER SQ. IN.
- AASHTO M270 GRADE 50	27,000 LBS. PER SQ. IN.
REINFORCING STEEL IN TENSION - GRADE 60	24,000 LBS. PER SQ. IN.
CONCRETE IN COMPRESSION	1,200 LBS. PER SQ. IN.
CONCRETE IN SHEAR	SEE AASHTO
STRUCTURAL TIMBER - TREATED OR UNTREATED EXTREME FIBER STRESS	1,800 LBS. PER SQ. IN.
COMPRESSION PERPENDICULAR TO GRAIN OF TIMBER	375 LBS. PER SQ. IN.
EQUIVALENT FLUID PRESSURE OF EARTH	30 LBS. PER CU. FT. (MINIMUM)

MATERIAL AND WORKMANSHIP:

EXCEPT AS MAY OTHERWISE BE SPECIFIED ON PLANS OR IN THE SPECIAL PROVISIONS, ALL MATERIAL AND WORKMANSHIP SHALL BE IN ACCORDANCE WITH THE 2024 "STANDARD SPECIFICATIONS FOR ROADS AND STRUCTURES" OF THE N. C. DEPARTMENT OF TRANSPORTATION.

STEEL SHEET PILING FOR PERMANENT OR TEMPORARY APPLICATIONS SHALL BE HOT ROLLED.

CONCRETE:

UNLESS OTHERWISE REQUIRED ON PLANS, CLASS A CONCRETE SHALL BE USED FOR ALL PORTIONS OF ALL STRUCTURES WITH THE EXCEPTION THAT: CLASS AA CONCRETE SHALL BE USED IN BRIDGE SUPERSTRUCTURES, ABUTMENT BACKWALLS, AND APPROACH SLABS; AND CLASS B CONCRETE SHALL BE USED FOR SLOPE PROTECTION AND RIP RAP.

CONCRETE CHAMFERS:

UNLESS OTHERWISE NOTED ON THE PLANS, ALL EXPOSED CORNERS ON STRUCTURES SHALL BE CHAMFERED ¾" WITH THE FOLLOWING EXCEPTIONS: TOP CORNERS OF CURBS MAY BE ROUNDED TO 1½" RADIUS WHICH IS BUILT INTO CURB FORMS; CORNERS OF TRANSVERSE FLOOR EXPANSION JOINTS SHALL BE ROUNDED WITH A ¼" FINISHING TOOL UNLESS OTHERWISE REQUIRED ON PLANS; AND CORNERS OF EXPANSION JOINTS IN THE ROADWAY FACES AND TOPS OF CURBS AND SIDEWALKS SHALL BE ROUNDED TO A ¼" RADIUS WITH A FINISHING STONE OR TOOL UNLESS OTHERWISE REQUIRED ON PLANS.

DOWELS:

DOWELS WHEN INDICATED ON PLANS AS FOR CULVERT EXTENSIONS, SHALL BE EMBEDDED AT LEAST 12" INTO THE OLD CONCRETE AND GROUTED INTO PLACE WITH 1:2 CEMENT MORTAR.

ALLOWANCE FOR DEAD LOAD DEFLECTION, SETTLEMENT, ETC. IN CASTING SUPERSTRUCTURES:

BRIDGES SHALL BE BUILT ON THE GRADE OR VERTICAL CURVE SHOWN ON PLANS. SLABS, CURBS AND PARAPETS SHALL CONFORM TO THE GRADE OR CURVE.

ALL DIMENSIONS WHICH ARE GIVEN IN SECTION AND ARE AFFECTED BY DEAD LOAD DEFLECTIONS ARE DIMENSIONS AT CENTER LINE OF BEARING UNLESS OTHERWISE NOTED ON PLANS. IN SETTING FORMS FOR STEEL BEAM BRIDGES AND PRESTRESSED CONCRETE GIRDER BRIDGES, ADJUSTMENTS SHALL BE MADE DUE TO THE DEAD LOAD DEFLECTIONS FOR THE ELEVATIONS SHOWN. WHERE BLOCKS ARE SHOWN OVER BEAMS FOR BUILDING UP TO THE SLAB, THE VERTICAL DIMENSIONS OF THE BLOCKS SHALL BE ADJUSTED BETWEEN BEARINGS TO COMPENSATE FOR DEAD LOAD DEFLECTIONS, VERTICAL CURVE ORDINATE, AND ACTUAL BEAM CAMBER. WHERE BOTTOM OF SLAB IS IN LINE WITH BOTTOM OF TOP FLANGES, DEPTH OF SLAB BETWEEN BEARINGS SHALL BE ADJUSTED TO COMPENSATE FOR DEAD LOAD DEFLECTION, VERTICAL CURVE ORDINATE, AND ACTUAL BEAM CAMBER.

IN SETTING FALSEWORK AND FORMS FOR REINFORCED CONCRETE SPANS, AN ALLOWANCE SHALL BE MADE FOR DEAD LOAD DEFLECTIONS, SETTLEMENT OF FALSEWORK, AND PERMANENT CAMBER WHICH SHALL BE PROVIDED FOR IN ADDITION TO THE ELEVATIONS SHOWN. AFTER REMOVAL OF THE FALSEWORK, THE FINISHED STRUCTURES SHALL CONFORM TO THE PROFILE AND ELEVATIONS SHOWN ON THE PLANS AND CONSTRUCTION ELEVATIONS FURNISHED BY THE ENGINEER.

DETAILED DRAWINGS FOR FALSEWORK OR FORMS FOR BRIDGE SUPERSTRUCTURE AND ANY STRUCTURE OR PARTS OF A STRUCTURE AS NOTED ON THE PLANS SHALL BE SUBMITTED TO THE ENGINEER FOR APPROVAL BEFORE CONSTRUCTION OF THE FALSEWORK OR FORMS IS STARTED.

REINFORCING STEEL:

ALL REINFORCING STEEL SHALL BE DEFORMED. DIMENSIONS RELATIVE TO PLACEMENT OF REINFORCING ARE TO CENTERS OF BARS UNLESS OTHERWISE INDICATED IN THE PLANS. DIMENSIONS ON BAR DETAILS ARE TO CENTERS OF BARS OR ARE OUT TO OUT AS INDICATED ON PLANS.

WIRE BAR SUPPORTS SHALL BE PROVIDED FOR REINFORCING STEEL WHERE INDICATED ON THE PLANS. WHEN BAR SUPPORT PIECES ARE PLACED IN CONTINUOUS LINES, THEY SHALL BE SO PLACED THAT THE ENDS OF THE SUPPORTING WIRES SHALL BE LAPPED TO LOCK LEGS ON ADJOINING PIECES.

STRUCTURAL STEEL:

AT THE CONTRACTOR'S OPTION, HE MAY SUBSTITUTE ⅞" ∅ SHEAR STUDS FOR THE ¾" ∅ STUDS SPECIFIED ON THE PLANS. THIS SUBSTITUTION SHALL BE MADE AT THE RATE OF 3 - ⅞" ∅ STUDS FOR 4 - ¾" ∅ STUDS, AND STUD SPACING CHANGES SHALL BE MADE AS NECESSARY TO PROVIDE THE SAME EQUIVALENT NUMBER OF ⅞" ∅ STUDS ALONG THE BEAM AS SHOWN FOR ¾" ∅ STUDS BASED ON THE RATIO OF 3 - ⅞"∅ STUDS FOR 4 - ¾" ∅ STUDS. STUDS OF THE LENGTH SPECIFIED ON THE PLANS MUST BE PROVIDED. THE MAXIMUM SPACING SHALL BE 2'-0".

EXCEPT AT THE INTERIOR SUPPORTS OF CONTINUOUS BEAMS WHERE THE COVER PLATE IS IN CONTACT WITH BEARING PLATE, THE CONTRACTOR MAY, AT HIS OPTION, SUBSTITUTE FOR THE COVER PLATES DESIGNATED ON THE PLANS COVER PLATES OF THE EQUIVALENT AREA PROVIDED THESE PLATES ARE AT LEAST 5/16" IN THICKNESS AND DO NOT EXCEED A WIDTH EQUAL TO THE FLANGE WIDTH LESS 2" OR A THICKNESS EQUAL TO 2 TIMES THE FLANGE THICKNESS. THE SIZE OF FILLET WELDS SHALL CONFORM TO THE REQUIREMENTS OF THE CURRENT ANSI/AASHTO/AWS "BRIDGE WELDING CODE". ELECTROSLAG WELDING WILL NOT BE PERMITTED.

WITH THE SOLE EXCEPTION OF EDGES AT SURFACES WHICH BEAR ON OTHER SURFACES, ALL SHARP EDGES AND ENDS OF SHAPES AND PLATES SHALL BE SLIGHTLY ROUNDED BY SUITABLE MEANS TO A RADIUS OF APPROXIMATELY 1/16" OR EQUIVALENT FLAT SURFACE AT A SUITABLE ANGLE PRIOR TO PAINTING, GALVANIZING, OR METALLIZING.

HANDRAILS AND POSTS:

METAL STANDARDS AND FACES OF THE CONCRETE END POSTS FOR THE METAL RAIL SHALL BE SET NORMAL TO THE GRADE OF THE CURB, UNLESS OTHERWISE SHOWN ON PLANS. THE METAL RAIL AND TOPS OF CONCRETE POSTS USED WITH THE ALUMINUM RAIL SHALL BE BUILT PARALLEL TO THE GRADE OF THE CURB.

METAL HANDRAILS SHALL BE IN ACCORDANCE WITH THE PLANS. RAILS SHALL BE AS MANUFACTURED FOR BRIDGE RAILING. CASTINGS SHALL BE OF A UNIFORM APPEARANCE. FINS AND OTHER DEFORMATIONS RESULTING FROM CASTING OR OTHERWISE SHALL BE REMOVED IN A MANNER SO THAT A UNIFORM COLORING OF THE COMPLETED CASTING SHALL BE OBTAINED. CASTINGS WITH DISCOLORATIONS OR OF NON-UNIFORM COLORING WILL NOT BE ACCEPTED. CERTIFIED MILL REPORTS ARE REQUIRED FOR METAL RAILS AND POSTS.

SPECIAL NOTES:

GENERALLY, IN CASE OF DISCREPANCY, THIS STANDARD SHEET OF NOTES SHALL GOVERN OVER THE SPECIFICATIONS, BUT THE REMAINDER OF THE PLANS SHALL GOVERN OVER NOTES HEREON, AND SPECIAL PROVISIONS SHALL GOVERN OVER ALL. SEE SPECIFICATIONS ARTICLE 105-4.

Docusign Envelope ID: 3F55B26C-7C78-8EA2-8391-D49442830 6FB

01/16/24

TIP PROJECT: HB-0053

CONTRACT: DK00482

See Sheet 1A For Index of Sheets
See Sheet 1B for Conventional Symbols

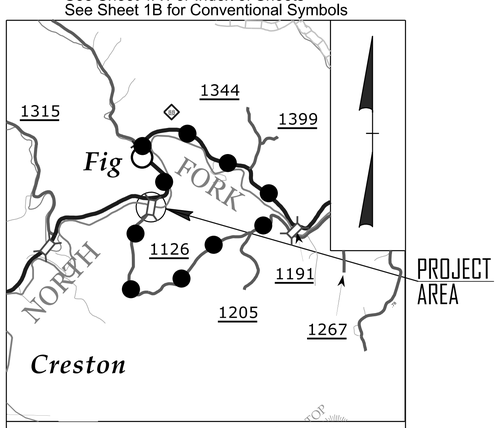

VICINITY MAP (NTS)
OFFSITE DETOUR ROUTE

STATE OF NORTH CAROLINA
DIVISION OF HIGHWAYS

ASHE COUNTY

LOCATION: *REPLACE BRIDGE NO. 040480 ON SR 1126 (ED LITTLE ROAD) OVER NORTH FORK NEW RIVER*

TYPE OF WORK: *GRADING, PAVING, STRUCTURE AND DRAINAGE*

STATE	STATE PROJECT REFERENCE NO.	SHEET NO.	TOTAL SHEETS
N.C.	HB-0053	1	

STATE PROJ. NO.	F. A. PROJ. NO.	DESCRIPTION
50723.1.1	FBRG111	P.E.
50723.2.1	FBRG111	R/W
50723.2.2	FBRG111	UTILITIES
50723.3.1	FBRG111	CONSTRUCTION

FINAL PLANS

BEGIN PROJECT HB-0053
-L- STA 10+00.00

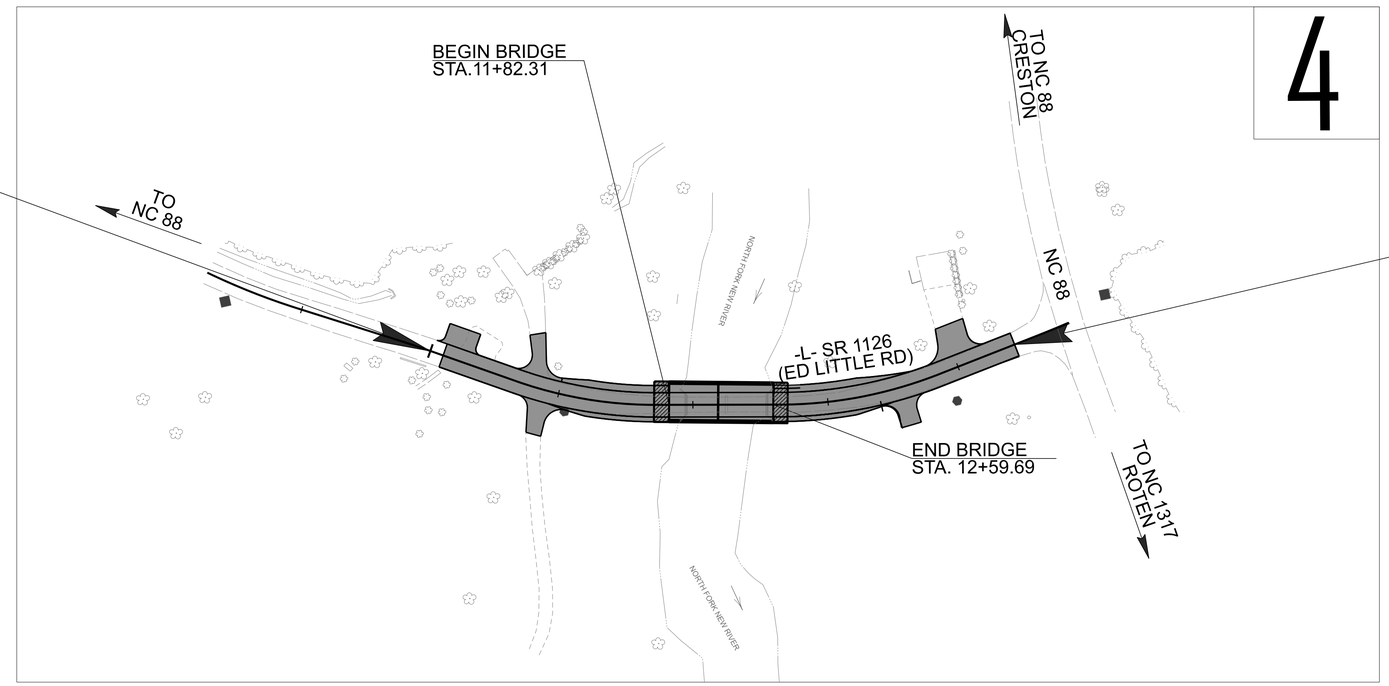

END PROJECT HB-0053
-L- STA 14+45.00

NAD 83/NA 2011

**DESIGN EXCEPTION FOR DESIGN SPEED, 15 MPH
THIS PROJECT IS NOT WITHIN ANY MUNICIPAL BOUNDARIES.

DOCUMENT NOT CONSIDERED FINAL UNLESS ALL SIGNATURES COMPLETED

GRAPHIC SCALES

30 15 0 30 60
PLANS

30 15 0 30 60
PROFILE (HORIZONTAL)

6 3 0 6 12
PROFILE (VERTICAL)

DESIGN DATA

ADT 2025 = 150
ADT 2045 = 223

T = 8 % *
V = 15 MPH**
* TTST = 6% DUAL 2%
FUNC CLASS =
RURAL LOCAL
SUBREGIONAL TIER

PROJECT LENGTH

LENGTH ROADWAY STATE PROJECT HB-0053 = 0.069 MILES
LENGTH STRUCTURE PROJECT HB-0053 = 0.015 MILES
TOTAL LENGTH STATE PROJECT HB-0053 = 0.084 MILES

PREPARED BY:
ms consultants, inc.
5444 Wade Park Blvd.
Suite 160
Raleigh, NC 27607
NC License Number : C-3239

2024 STANDARD SPECIFICATIONS

RIGHT OF WAY DATE:
08/15/2025

LETTING DATE:
09/17/2026

PREPARED FOR:
DIVISION OF HIGHWAYS
DIVISION 11
801 Statesville Rd.,
North Wilkesboro NC, 28659

RAMIE SHAW, PE
NCDOT CONTACT

DAVID JANOSKO, PE
PROJECT ENGINEER

SKYLAR STULTZ, EIT
PROJECT DESIGN ENGINEER

HYDRAULICS ENGINEER
MI ENGINEERING
1011 SCHAUB DRIVE, SUITE 100
RALEIGH, NC 27606
(919) 851-6606
FIRM PE NUMBER : P-0671

DocuSigned by: Herb Turner 7/28/2026 P.E.
SIGNATURE:

NORTH CAROLINA PROFESSIONAL SEAL 021162 ENGINEER W. HERBERT TURNER, JR.

PROJECT ENGINEER

DocuSigned by: David Janosko 7/28/2026 P.E.
SIGNATURE:

NORTH CAROLINA PROFESSIONAL SEAL 043023 ENGINEER DAVID V. JANOSKO

STATE OF NORTH CAROLINA DEPARTMENT OF TRANSPORTATION

Docusign Envelope ID: 1623FB64-AC73-83AD-82C3-465B8E874CF5

11/14/23

11/15/23

INDEX OF SHEETS

SHEET NUMBER	SHEET
1	TITLE SHEET
1A	INDEX OF SHEETS, GENERAL NOTES, AND STANDARD DRAWINGS
1B	CONVENTIONAL SYMBOLS
2A-1	PAVEMENT SCHEDULE AND TYPICAL SECTIONS
2B-1	GEOMETRY AND RIGHT-OF-WAY DETAIL
2C-1	DETAIL IN LIEU OF STANDARD 300.01 METHOD OF PIPE INSTALLATION (SHEET 1 OF 2)
2C-2	DETAIL IN LIEU OF STANDARD 300.01 METHOD OF PIPE INSTALLATION (SHEET 2 OF 2)
2C-3	DETAIL IN LIEU OF STANDARD 862.01 GUARDRAIL PLACEMENT (SHEET 4 OF 15)
2C-4	DETAIL IN LIEU OF STANDARD 862.01 GUARDRAIL PLACEMENT (SHEET 6 OF 15)
2C-5	DETAIL IN LIEU OF STANDARD MODFLMDTCH MODIFIED CONCRETE FLUME (SHEET 1 OF 1)
3B-1	ROADWAY SUMMARY
3D-1	DRAINAGE SUMMARY
3G-1	GEOTECHNICAL SUMMARY
4	PLAN SHEET
5	PROFILE SHEET
RW-1 THRU RW-4	RIGHT-OF-WAY PLANS
TMP-1 THRU TMP-3	TRAFFIC MANAGEMENT PLANS
PMP-1 THRU PMP-2	PAVEMENT MARKING PLANS
EC-1 THRU EC-5	EROSION CONTROL PLANS
UO-1 THRU UO-2	UTILITIES BY OTHERS PLANS
X-1	CROSS-SECTION INDEX
X-1A	CROSS-SECTION SUMMARY SHEET
X-2 THRU X-8	CROSS-SECTIONS
S-1 THRU S-23	STRUCTURE PLANS

GENERAL NOTES:

2024 SPECIFICATIONS
EFFECTIVE: 01-16-2024
REVISED:

GRADING AND SURFACING OR RESURFACING AND WIDENING:

THE GRADE LINES SHOWN DENOTE THE FINISHED ELEVATION OF THE PROPOSED SURFACING AT GRADE POINTS SHOWN ON THE TYPICAL SECTIONS. WHERE NO GRADE LINES ARE SHOWN, THE PROFILES SHOWN DENOTE THE TOP ELEVATION OF THE EXISTING PAVEMENT ALONG THE CENTER LINE OF SURVEY ON WHICH THE PROPOSED RESURFACING WILL BE PLACED. GRADE LINES MAY BE ADJUSTED BY THE ENGINEER IN ORDER TO SECURE A PROPER TIE-IN.

CLEARING:

CLEARING ON THIS PROJECT SHALL BE PERFORMED TO THE LIMITS ESTABLISHED BY METHOD III.

SUPERELEVATION:

ALL CURVES ON THIS PROJECT SHALL BE SUPERELEVATED IN ACCORDANCE WITH **STD. NO. 225.04** USING THE RATE OF SUPERELEVATION AND RUNOFF SHOWN ON THE PLANS. SUPERELEVATION IS TO BE REVOLVED ABOUT THE GRADE POINTS SHOWN ON THE TYPICAL SECTIONS.

SHOULDER CONSTRUCTION:

ASPHALT, EARTH, AND CONCRETE SHOULDER CONSTRUCTION ON THE HIGH SIDE OF SUPERELEVATED CURVES SHALL BE IN ACCORDANCE WITH **STD. NO. 560.01**

SUBSURFACE DRAINS:

SUBSURFACE DRAINS SHALL BE CONSTRUCTED IN ACCORDANCE WITH STD. NO. 815.02 AT LOCATIONS DIRECTED BY THE ENGINEER.

DRIVEWAYS:

DRIVEWAYS SHALL BE CONSTRUCTED IN ACCORDANCE WITH STD. 848.02 USING 3 FOOT RADII OR RADII AS SHOWN ON THE PLANS. LOCATIONS OF DRIVES WILL BE AS SHOWN ON THE PLANS OR AS DIRECTED BY THE ENGINEER.

GUARDRAIL:

THE GUARDRAIL LOCATIONS SHOWN ON THE PLANS MAY BE ADJUSTED DURING CONSTRUCTION AS DIRECTED BY THE ENGINEER. THE CONTRACTOR SHOULD CONSULT WITH THE ENGINEER PRIOR TO ORDERING GUARDRAIL MATERIAL.

TEMPORARY SHORING:

SHORING REQUIRED FOR THE MAINTENANCE OF TRAFFIC WILL BE PAID FOR AS "EXTRA WORK" IN ACCORDANCE WITH SECTION 104-7.

END BENTS:

THE ENGINEER SHALL CHECK THE STRUCTURE END BENT PLANS, DETAILS, AND CROSS-SECTION PRIOR TO SETTING OF THE SLOPE STAKES FOR THE EMBANKMENT OR EXCAVATION APPROACHING A BRIDGE.

UTILITIES:

ANY RELOCATION OF EXISTING UTILITIES WILL BE ACCOMPLISHED BY OTHERS.
A) BLUE RIDGE ENERGY EMC - POWER
B) SKYLINE MEMBERSHIP CORP - TELEPHONE

RIGHT-OF-WAY MARKERS:

ALL RIGHT-OF-WAY MARKERS ON THIS PROJECT SHALL BE PLACED BY OTHERS.

2024 ROADWAY ENGLISH STANDARD DRAWINGS: EFFECTIVE: 08-11-2025
REV. 11-26-2025

The following Roadway Standards as appear in "Roadway Standard Drawings" Contracts Standards and Development Unit - N. C. Department of Transportation - Raleigh, N. C., Dated January 16, 2024 are applicable to this project and by reference hereby are considered a part of these plans:

STD.	TITLE
DIVISION 2 - EARTHWORK	
200.03	Method of Clearing - Method III
225.02	Guide for Grading Subgrade - Secondary and Local
225.04	Method of Obtaining Superelevation - Two Lane Pavement
DIVISION 3 - PIPE CULVERTS	
300.01	Method of Pipe Installation (Use Details in Lieu of Standards for Sheets 1 and 2 of 2)
310.10	Driveway Pipe Construction
DIVISION 4 - MAJOR STRUCTURES	
423.01	Bridge Approach Fills - Type 1 Approach Fill for Bridge Abutment
DIVISION 5 - SUBGRADE, BASES AND SHOULDERS	
560.01	Method of Shoulder Construction - High Side of Superelevated Curve - Method I
DIVISION 8 - INCIDENTALS	
815.02	Subsurface Drain
840.00	Concrete Base Pad for Drainage Structures
840.14	Concrete Drop Inlet - 12" thru 30" Pipe
840.15	Brick Drop Inlet - 12" thru 30" Pipe
840.16	Drop Inlet Frame and Grates - for use with Std. Dwg 840.14 and 840.15
840.25	Anchorage for Frames - Brick or Concrete or Precast
840.45	Precast Drainage Structure
846.01	Concrete Curb, Gutter and Curb & Gutter
848.02	Driveway Turnout - Radius Type
850.01	Concrete Paved Ditches
850.10	Guide for Berm Drainage Outlet - 15" and 18" Pipe
862.01	Guardrail Placement (Use Details in Lieu of Standards for Sheets 4, 6, and 11 of 15)
862.03	Structure Anchor Units
876.01	Rip Rap in Channels and Ditches
876.02	Guide for Rip Rap at Pipe Outlets
876.04	Drainage Ditches with Class 'B' Rip Rap

HB-0053
1A

NORTH CAROLINA
DEPARTMENT OF TRANSPORTATION
ASHE COUNTY

ROADWAY DESIGN UNIT

ROADWAY DESIGN ENGINEER

NORTH CAROLINA PROFESSIONAL SEAL 043023 ENGINEER DAVID V. JANOSKO

DocuSigned by:
David Janosko
D5DDCEF7B05E4A8...
8/16/2026

PREPARED BY

ms consultants, inc.
5444 Wade Park Blvd.
Suite 160
Raleigh, NC 27607
NC License Number : C-3230

DOCUMENT NOT CONSIDERED FINAL UNLESS ALL SIGNATURES COMPLETED

REVISIONS

Note: Not to Scale

STATE OF NORTH CAROLINA, DIVISION OF HIGHWAYS

CONVENTIONAL PLAN SHEET SYMBOLS

BOUNDARIES AND PROPERTY:

- State Line
- County Line
- Township Line
- City Line
- Reservation Line
- Property Line
- Existing Iron Pin (EIP) — EIP
- Computed Property Corner
- Existing Concrete Monument (ECM) — ECM
- Parcel / Sequence Number — 123
- Existing Fence Line
- Proposed Woven Wire Fence
- Proposed Chain Link Fence
- Proposed Barbed Wire Fence
- Existing Wetland Boundary — WLB
- Proposed Wetland Boundary — WLB
- Existing Endangered Animal Boundary — EAB
- Existing Endangered Plant Boundary — EPB
- Existing Historic Property Boundary — HPB
- Known Contamination Area: Soil — S
- Potential Contamination Area: Soil — S
- Known Contamination Area: Water — W
- Potential Contamination Area: Water — W
- Contaminated Site: Known or Potential

BUILDINGS AND OTHER CULTURE:

- Gas Pump Vent or U/G Tank Cap
- Sign — S
- Well — W
- Small Mine
- Foundation
- Area Outline
- Cemetery
- Building
- School
- Church
- Dam

HYDROLOGY:

- Stream or Body of Water
- Hydro, Pool or Reservoir
- Jurisdictional Stream — JS
- Buffer Zone 1 — BZ 1
- Buffer Zone 2 — BZ 2
- Flow Arrow
- Disappearing Stream
- Spring
- Wetland
- Proposed Lateral, Tail, Head Ditch — FLOW
- False Sump

RAILROADS:

- Standard Gauge — CSX TRANSPORTATION
- RR Signal Milepost — MILEPOST 35
- Switch — SWITCH
- RR Abandoned
- RR Dismantled

RIGHT OF WAY & PROJECT CONTROL:

- Primary Horiz Control Point
- Primary Horiz and Vert Control Point
- Secondary Horiz and Vert Control Point
- Vertical Benchmark
- Existing Right of Way Monument
- Proposed Right of Way Monument (Rebar and Cap)
- Proposed Right of Way Monument (Concrete)
- Existing Permanent Easement Monument
- Proposed Permanent Easement Monument (Rebar and Cap)
- Existing C/A Monument
- Proposed C/A Monument (Rebar and Cap)
- Proposed C/A Monument (Concrete)
- Existing Right of Way Line
- Proposed Right of Way Line — RW
- Existing Control of Access Line — CA
- Proposed Control of Access Line — CA
- Proposed ROW and CA Line — RW CA
- Existing Easement Line — E
- Proposed Temporary Construction Easement — E
- Permanent Construction Easement — PE
- Proposed Temporary Drainage Easement — TDE
- Proposed Permanent Drainage Easement — PDE
- Proposed Permanent Drainage/Utility Easement — DUE
- Proposed Permanent Utility Easement — PUE
- Proposed Temporary Utility Easement — TUE
- Proposed Aerial Utility Easement — AUE

ROADS AND RELATED FEATURES:

- Existing Edge of Pavement
- Existing Curb
- Proposed Slope Stakes Cut — C
- Proposed Slope Stakes Fill — F
- Proposed Curb Ramp — CR
- Existing Metal Guardrail
- Proposed Guardrail
- Existing Cable Guiderail
- Proposed Cable Guiderail
- Equality Symbol
- Pavement Removal

VEGETATION:

- Single Tree
- Single Shrub
- Hedge
- Woods Line
- Orchard
- Vineyard — Vineyard

EXISTING STRUCTURES:

MAJOR:

- Bridge, Tunnel or Box Culvert — CONC
- Bridge Wing Wall, Head Wall and End Wall — CONC WW

MINOR:

- Head and End Wall — CONC HW
- Pipe Culvert
- Footbridge
- Drainage Box: Catch Basin, DI or JB — CB
- Paved Ditch Gutter
- Storm Sewer Manhole — S
- Storm Sewer — S

UTILITIES:

** SUE - Subsurface Utility Engineering*
LOS - Level of Service - A,B,C or D (Accuracy)

POWER:

- Existing Power Pole
- Proposed Power Pole
- Existing Joint Use Pole
- Proposed Joint Use Pole
- Power Manhole — P
- Power Line Tower
- Power Transformer
- U/G Power Cable Hand Hole — HH
- H-Frame Pole
- U/G Power Line Test Hole (SUE - LOS A)*
- U/G Power Line (SUE - LOS B)* — P
- U/G Power Line (SUE - LOS C)* — P
- U/G Power Line (SUE - LOS D)* — P

TELEPHONE:

- Existing Telephone Pole
- Proposed Telephone Pole
- Telephone Manhole — T
- Telephone Pedestal — T
- Telephone Cell Tower
- U/G Telephone Cable Hand Hole — HH
- U/G Telephone Test Hole (SUE - LOS A)*
- U/G Telephone Cable (SUE - LOS B)* — T
- U/G Telephone Cable (SUE - LOS C)* — T
- U/G Telephone Cable (SUE - LOS D)* — T
- U/G Telephone Conduit (SUE - LOS B)* — TC
- U/G Telephone Conduit (SUE - LOS C)* — TC
- U/G Telephone Conduit (SUE - LOS D)* — TC
- U/G Fiber Optics Cable (SUE - LOS B)* — T FO
- U/G Fiber Optics Cable (SUE - LOS C)* — T FO
- U/G Fiber Optics Cable (SUE - LOS D)* — T FO

WATER:

- Water Manhole — W
- Water Meter
- Water Valve
- Water Hydrant
- U/G Water Line Test Hole (SUE - LOS A)*
- U/G Water Line (SUE - LOS B)* — W
- U/G Water Line (SUE - LOS C)* — W
- U/G Water Line (SUE - LOS D)* — W
- Above Ground Water Line — A/G Water

TV:

- TV Pedestal — C
- TV Tower
- U/G TV Cable Hand Hole — HH
- U/G TV Test Hole (SUE - LOS A)*
- U/G TV Cable (SUE - LOS B)* — TV
- U/G TV Cable (SUE - LOS C)* — TV
- U/G TV Cable (SUE - LOS D)* — TV
- U/G Fiber Optic Cable (SUE - LOS B)* — TV FO
- U/G Fiber Optic Cable (SUE - LOS C)* — TV FO
- U/G Fiber Optic Cable (SUE - LOS D)* — TV FO

GAS:

- Gas Valve
- Gas Meter
- U/G Gas Line Test Hole (SUE - LOS A)*
- U/G Gas Line (SUE - LOS B)* — G
- U/G Gas Line (SUE - LOS C)* — G
- U/G Gas Line (SUE - LOS D)* — G
- Above Ground Gas Line — A/G Gas

SANITARY SEWER:

- Sanitary Sewer Manhole
- Sanitary Sewer Cleanout
- U/G Sanitary Sewer Line — SS
- Above Ground Sanitary Sewer — A/G Sanitary Sewer
- SS Force Main Line Test Hole (SUE - LOS A)*
- SS Force Main Line (SUE - LOS B)* — FSS
- SS Force Main Line (SUE - LOS C)* — FSS
- SS Force Main Line (SUE - LOS D)* — FSS

MISCELLANEOUS:

- Utility Pole
- Utility Pole with Base
- Utility Located Object
- Utility Traffic Signal Box — S
- Utility Unknown U/G Line (SUE - LOS B)* — ?UTL
- U/G Tank; Water, Gas, Oil
- Underground Storage Tank, Approx. Loc. — UST
- A/G Tank; Water, Gas, Oil
- Geoenvironmental Boring
- Abandoned According to Utility Records — AATUR
- End of Information — E.O.I.

Docusign Envelope ID: 662A03FC-75BC-8F89-8397-F2E79272B793

11/14/23

FINAL PAVEMENT SCHEDULE

A	6" CONCRETE DRIVEWAY
C1	PROP. APPROX. 1½" ASPHALT CONCRETE SURFACE COURSE, TYPE S9.5B, AT AN AVERAGE RATE OF 165 LBS. PER SQ. YD.
C2	PROP. APPROX. 3" ASPHALT CONCRETE SURFACE COURSE, TYPE S9.5B, AT AN AVERAGE RATE OF 165 LBS. PER SQ. YD. IN EACH OF TWO LAYERS.
C3	PROP. VAR. DEPTH ASPHALT CONCRETE SURFACE COURSE, TYPE S9.5B, AT AN AVERAGE RATE OF 110 LBS. PER SQ. YD. PER 1" DEPTH. TO BE PLACED IN LAYERS NOT LESS THAN 1" OR GREATER THAN 1½" IN DEPTH.
E1	PROP. APPROX. 4" ASPHALT CONCRETE BASE COURSE, TYPE B25.0C, AT AN AVERAGE RATE OF 456 LBS. PER SQ. YD.
E2	PROP. VAR. DEPTH ASPHALT CONCRETE BASE COURSE, TYPE B25.0C, AT AN AVERAGE RATE OF 114 LBS. PER SQ. YD. PER 1" DEPTH. TO BE PLACED IN LAYERS NOT LESS THAN 3" OR GREATER THAN 5½" IN DEPTH.
R	SHOULDER BERM GUTTER.
T	EARTH MATERIAL.
U	EXISTING PAVEMENT.
V	MILLING.
W	VARIABLE DEPTH ASPHALT PAVEMENT (SEE DETAIL SHOWING METHOD OF WEDGING).

NOTE: PAVEMENT EDGE SLOPES ARE 1:1 UNLESS SHOWN OTHERWISE.

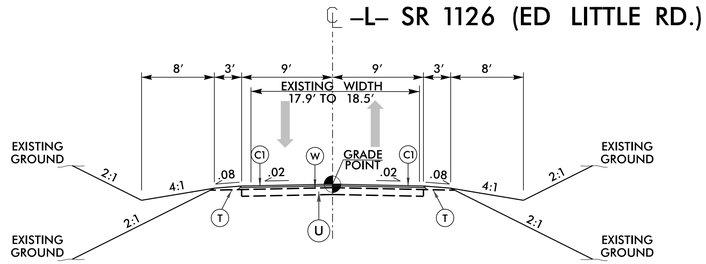

TYPICAL SECTION NO. 1

–L– STA. 10+10.00 TO –L– STA. 11+10.00

–L– STA. 13+80.00 TO –L– STA. 14+45.00

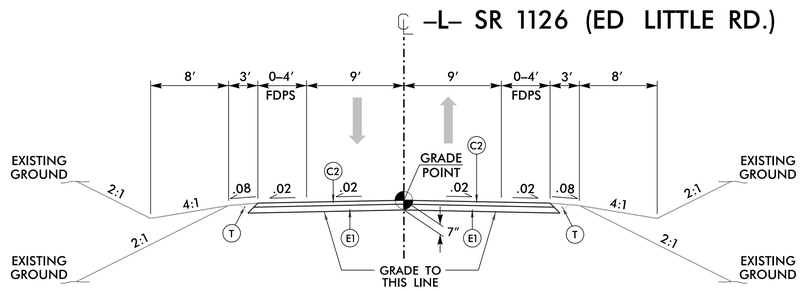

TYPICAL SECTION NO. 2

–L– STA. 11+10.00 TO –L– STA. 11+82.31

–L– STA. 12+59.69 TO –L– STA. 13+80.00

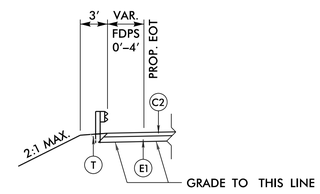

GUARDRAIL AND PAVED SHOULDER DETAIL

SEE PLAN FOR LOCATIONS

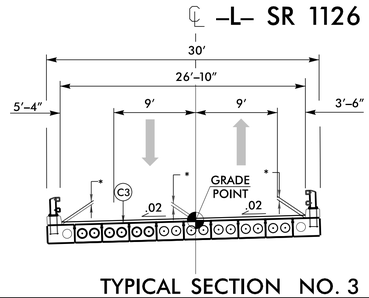

TYPICAL SECTION NO. 3

–L– STA 11+82.31 (BEGIN BRIDGE) TO –L– STA 12+59.69 (END BRIDGE)

*SEE STRUCTURE PLANS FOR CONCRETE OVERLAY SURFACE DEPTH

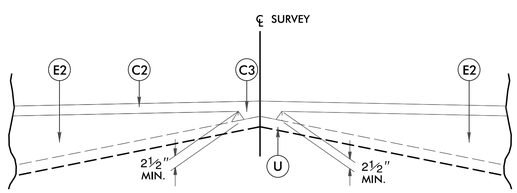

Detail Showing Method of Wedging

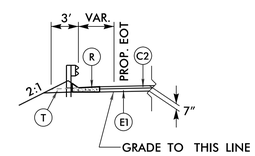

SHOULDER BERM GUTTER DETAIL

(USE IN CONJUCTION WITH TYP. NO. 2)

–L– STA. 12+59 TO –L– STA. 12+80 LT

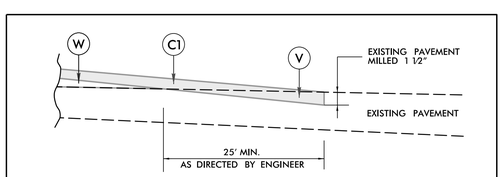

Incidental Milling Existing Pavement

HB-0053

2A-1

NORTH CAROLINA
DEPARTMENT OF TRANSPORTATION
ASHE COUNTY

ROADWAY DESIGN UNIT

ROADWAY DESIGN ENGINEER

NORTH CAROLINA PROFESSIONAL SEAL 043023 ENGINEER DAVID V. JANOSKO

DocuSigned by: David Janosko 7/17/2026

C5B0CEF1B05EC486...

PAVEMENT DESIGN ENGINEER

NORTH CAROLINA PROFESSIONAL SEAL 049851 ENGINEER RAMIE A. SHAW

DocuSigned by: Ramie Shaw 7/22/2026

C5B0CBF1B0BEC4...

PREPARED BY

ms consultants, inc.
5444 Wade Park Blvd.
Suite 160
Raleigh, NC 27607
NC License Number : C-3230

DOCUMENT NOT CONSIDERED FINAL UNLESS ALL SIGNATURES COMPLETED

REVISIONS

Docusign Envelope ID: 3C7731E1C-7228-886E-83D8-2572AD8F30DE

11/14/23

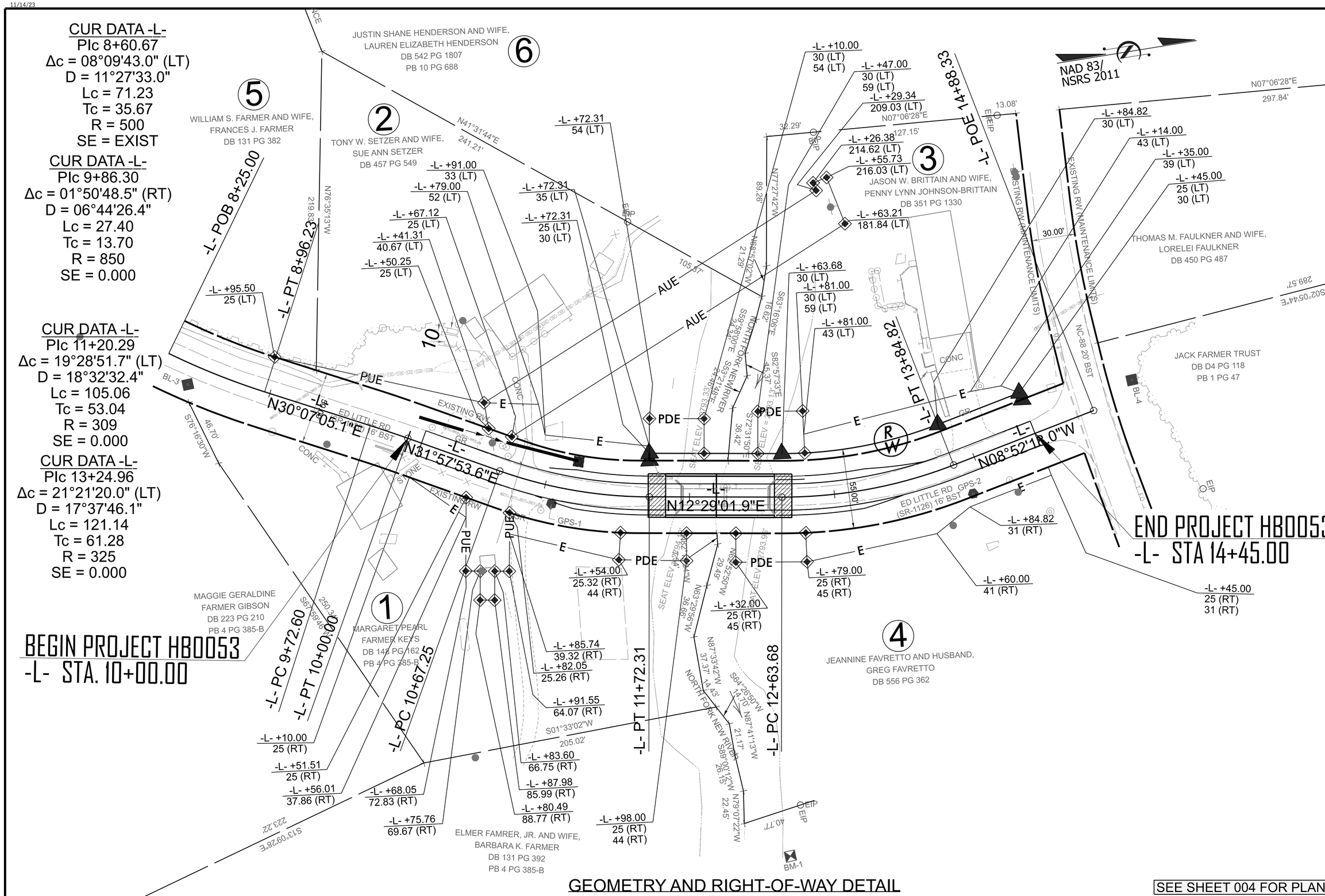

GEOMETRY AND RIGHT-OF-WAY DETAIL

SEE SHEET 004 FOR PLAN

Docusign Envelope ID: D0A3383B-23F8-8CCF-8264-647414B17419

PROJECT REFERENCE NO.	SHEET NO.
HB-0053	2C-1

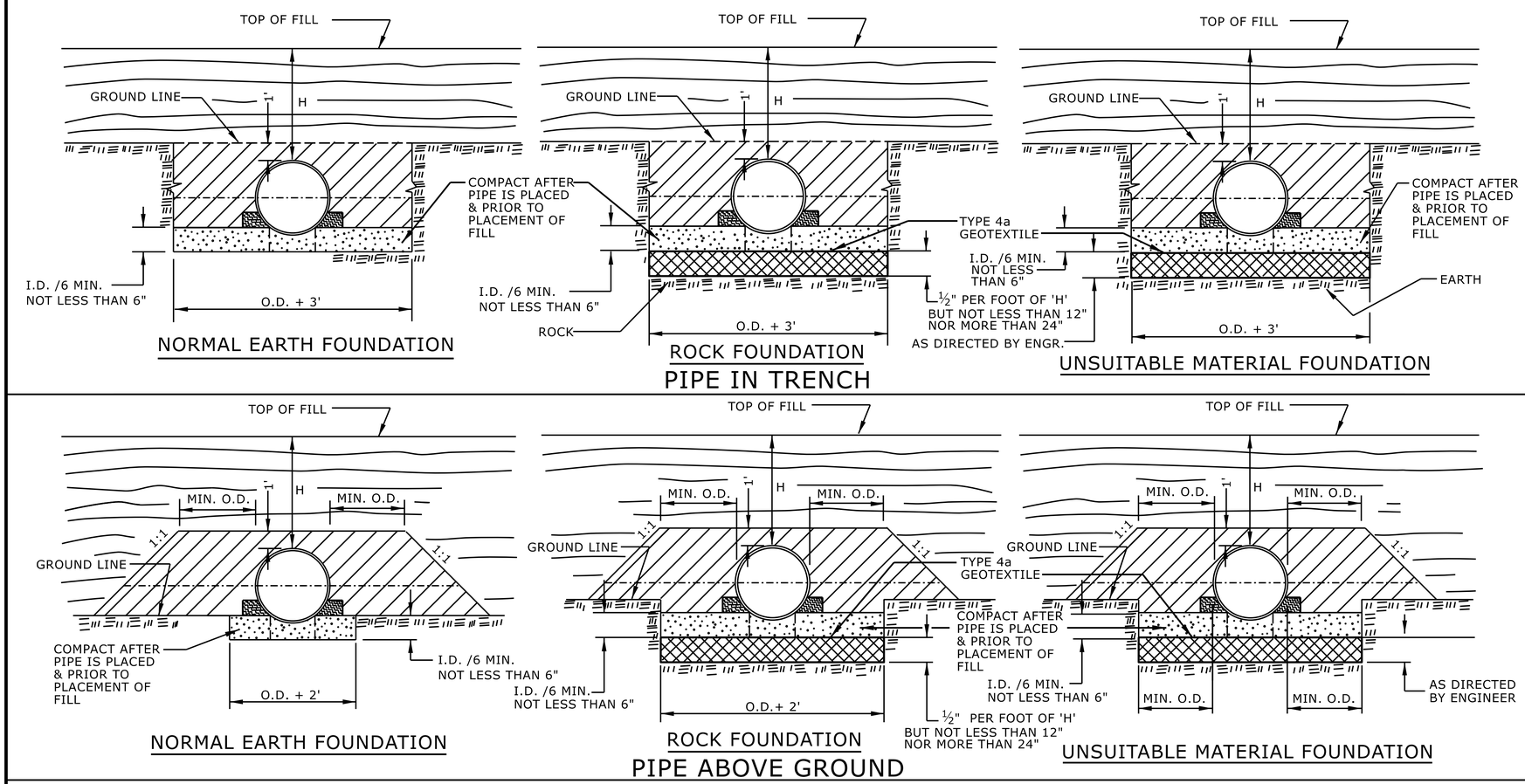

GENERAL NOTES:

I.D. = THE MAXIMUM HORIZONTAL INSIDE DIAMETER DIMENSION.

O.D. = THE MAXIMUM HORIZONTAL OUTSIDE DIAMETER DIMENSION.

H = THE FILL HEIGHT MEASURED VERTICALLY AT ANY POINT ALONG THE PIPE FROM THE TOP OF THE PIPE TO THE TOP OF THE EMBANKMENT AT THAT POINT.

APPROVED SUITABLE LOCAL MATERIAL.

TAKE CARE TO FULLY COMPACT HAUNCH ZONE OF PIPE BACKFILL.

LOOSELY PLACED SELECT MATERIAL CLASS III OR CLASS II, TYPE 1 FOR PIPE BEDDING. LEAVE SECTION DIRECTLY BENEATH PIPE UNCOMPACTED AS PIPE SEATING AND BACKFILL WILL ACCOMPLISH COMPACTION.

DO NOT OPERATE HEAVY EQUIPMENT OVER ANY PIPE CULVERT UNTIL THE PIPE CULVERT HAS BEEN PROPERLY BACKFILLED AND COVERED WITH AT LEAST 3 FEET OF APPROVED MATERIAL.

REFER TO NCDOT PIPE MATERIAL SELECTION GUIDE AND STANDARD SPECIFICATIONS FOR ALLOWABLE PIPE FILL HEIGHTS AND PIPE SPECIFICATIONS.

SPRINGLINE OF PIPE

SELECT BACKFILL MATERIAL CLASS III OR CLASS II, TYPE 1 ABOVE AND BELOW SPRINGLINE.

UNDISTURBED EARTH MATERIAL

SELECT MATERIAL CLASS V OR VI FOR FOUNDATION CONDITIONING. ENCAPSULATE WITH TYPE IV GEOTEXTILE AS DIRECTED BY THE ENGINEER.

STATE OF NORTH CAROLINA
DEPT. OF TRANSPORTATION
DIVISION OF HIGHWAYS
RALEIGH, N.C.

ROADWAY DETAIL DRAWING FOR

METHOD OF PIPE INSTALLATION

FLEXIBLE PIPE

SHEET 1 OF 2

300.01

NORTH CAROLINA PROFESSIONAL SEAL 033144 ENGINEER NICOLE M. HACKLER

Signed by: Nicole M Hackler
5884323D34164C5...

DOCUMENT NOT CONSIDERED FINAL UNLESS ALL SIGNATURES COMPLETED

CONTRACTS STANDARDS AND DEVELOPMENT UNIT
Office 919-707-6950 FAX 919-250-4119

SEE TITLE BLOCK

ORIGINAL BY: S.CALHOUN DATE: 7-25-2024
MODIFIED BY: DATE:
CHECKED BY: DATE:
FILE SPEC.:

Docusign Envelope ID: D0A3383B-23F8-8CCF-8264-647414B17419

PROJECT REFERENCE NO.	SHEET NO.
HB-0053	2C-2

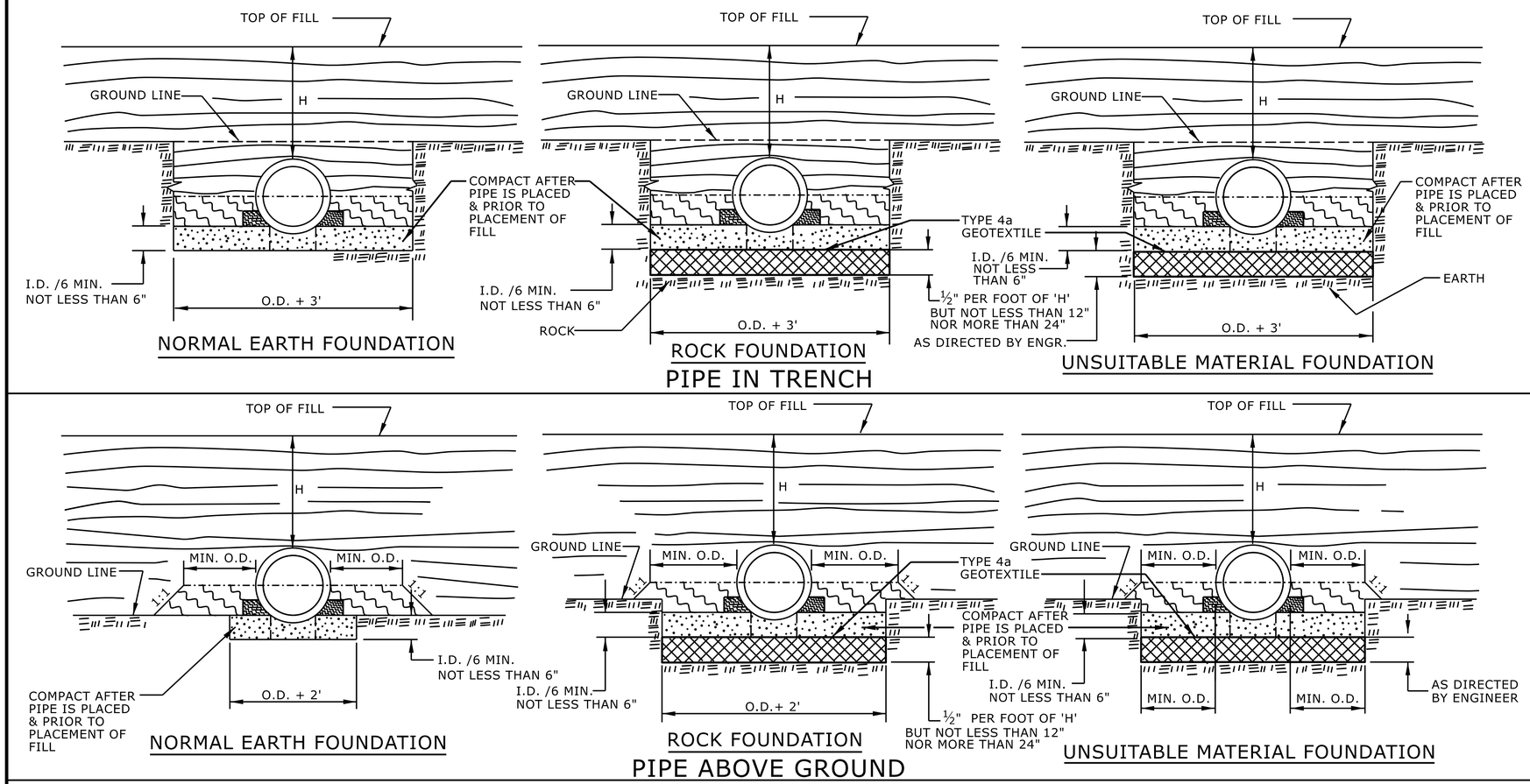

GENERAL NOTES:

I.D. = THE MAXIMUM HORIZONTAL INSIDE DIAMETER DIMENSION.

O.D. = THE MAXIMUM HORIZONTAL OUTSIDE DIAMETER DIMENSION.

H = THE FILL HEIGHT MEASURED VERTICALLY AT ANY POINT ALONG THE PIPE FROM THE TOP OF THE PIPE TO THE TOP OF THE EMBANKMENT AT THAT POINT.

APPROVED SUITABLE LOCAL MATERIAL.

TAKE CARE TO FULLY COMPACT HAUNCH ZONE OF PIPE BACKFILL.

LOOSELY PLACED SELECT MATERIAL CLASS III OR CLASS II, TYPE 1 FOR PIPE BEDDING. LEAVE SECTION DIRECTLY BENEATH PIPE UNCOMPACTED AS PIPE SEATING AND BACKFILL WILL ACCOMPLISH COMPACTION.

DO NOT OPERATE HEAVY EQUIPMENT OVER ANY PIPE CULVERT UNTIL THE PIPE CULVERT HAS BEEN PROPERLY BACKFILLED AND COVERED WITH AT LEAST 3 FEET OF APPROVED MATERIAL.

REFER TO NCDOT PIPE MATERIAL SELECTION GUIDE AND STANDARD SPECIFICATIONS FOR ALLOWABLE PIPE FILL HEIGHTS AND PIPE SPECIFICATIONS.

SPRINGLINE OF PIPE

SELECT BACKFILL MATERIAL CLASS III OR CLASS II, BELOW SPRINGLINE.

UNDISTURBED EARTH MATERIAL

SELECT MATERIAL CLASS V OR VI FOR FOUNDATION CONDITIONING. ENCAPSULATE WITH TYPE IV GEOTEXTILE AS DIRECTED BY THE ENGINEER.

STATE OF NORTH CAROLINA
DEPT. OF TRANSPORTATION
DIVISION OF HIGHWAYS
RALEIGH, N.C.

ROADWAY DETAIL DRAWING FOR

METHOD OF PIPE INSTALLATION

RIGID PIPE

NORTH CAROLINA PROFESSIONAL SEAL 033144 ENGINEER NICOLE M. HACKLER

Signed by: Nicole M Hackler
5884323D3416C5...

SHEET 2 OF 2

300.01

DOCUMENT NOT CONSIDERED FINAL UNLESS ALL SIGNATURES COMPLETED

CONTRACTS STANDARDS AND DEVELOPMENT UNIT
Office 919-707-6950 FAX 919-250-4119

SEE TITLE BLOCK

ORIGINAL BY: S.CALHOUN DATE: 7-25-2024
MODIFIED BY: DATE:
CHECKED BY: DATE:
FILE SPEC.:

Docusign Envelope ID: D0A3383B-23F8-8CCF-8264-647414B17419

PROJECT REFERENCE NO.	SHEET NO.
HB-0053	2C-3

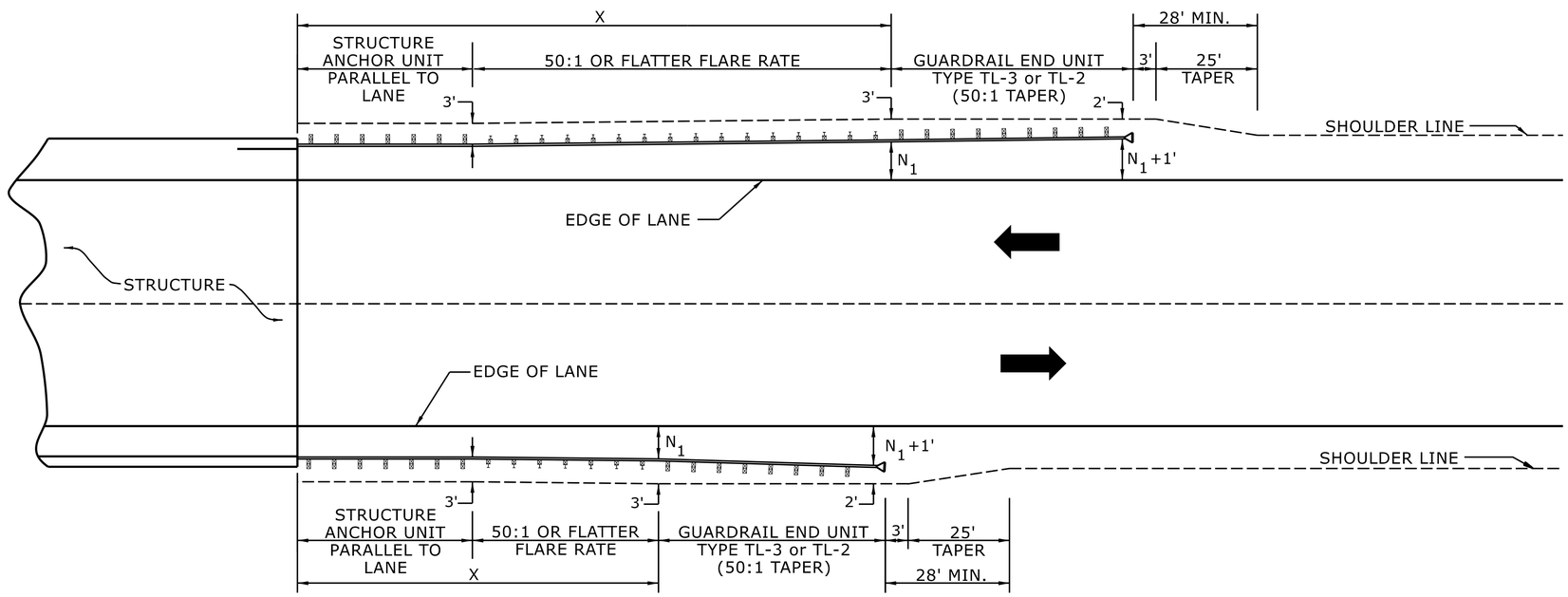

USE FLARE RATE AS THE CONTROL IF THE "N_1" DISTANCE IS NOT OBTAINED.
("N_1" IS BASED ON SHOULDER WIDTHS IN THE ROADWAY DESIGN MANUAL)

SEE STD. 862.03 FOR STRUCTURE ANCHOR UNITS

FOR POSTED SPEEDS ≥ 45MPH USE GREU TYPE TL-3
FOR POSTED SPEEDS < 45MPH USE GREU TYPE TL-2

GUARDRAIL LENGTH OF NEED (X) IS CALCULATED BASED ON THE AASHTO ROADSIDE DESIGN GUIDE.

LENGTHS AND OFFSETS FOR PROPOSED GUARDRAIL AT TWO LANE - TWO WAY LOCATIONS

STATE OF NORTH CAROLINA
DEPT. OF TRANSPORTATION
DIVISION OF HIGHWAYS
RALEIGH, N.C.

ROADWAY DETAIL DRAWING FOR
GUARDRAIL PLACEMENT

NORTH CAROLINA PROFESSIONAL SEAL 033144 ENGINEER NICOLE M. HACKLER

Signed by: Nicole M Hackler
5884323D34164C8...

SHEET 4 OF 15
862D01

DOCUMENT NOT CONSIDERED FINAL UNLESS ALL SIGNATURES COMPLETED

CONTRACTS STANDARDS AND DEVELOPMENT UNIT
Office 919-707-6950 FAX 919-250-4119

SEE TITLE BLOCK

ORIGINAL BY: S.CALHOUN DATE: 7-25-2024
MODIFIED BY: DATE:
CHECKED BY: DATE:
FILE SPEC.:

Docusign Envelope ID: D0A3383B-23F8-8CCF-8264-647414B17419

PROJECT REFERENCE NO.	SHEET NO.
HB-0053	2C-4

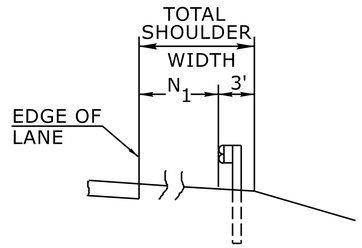

FILL SECTION

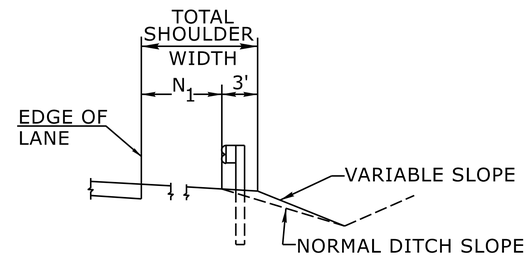

CUT SECTION

"N_1"= DISTANCE FROM EDGE OF LANE TO FACE OF GUARDRAIL WHERE GUARDRAIL IS PARALLEL TO LANE.

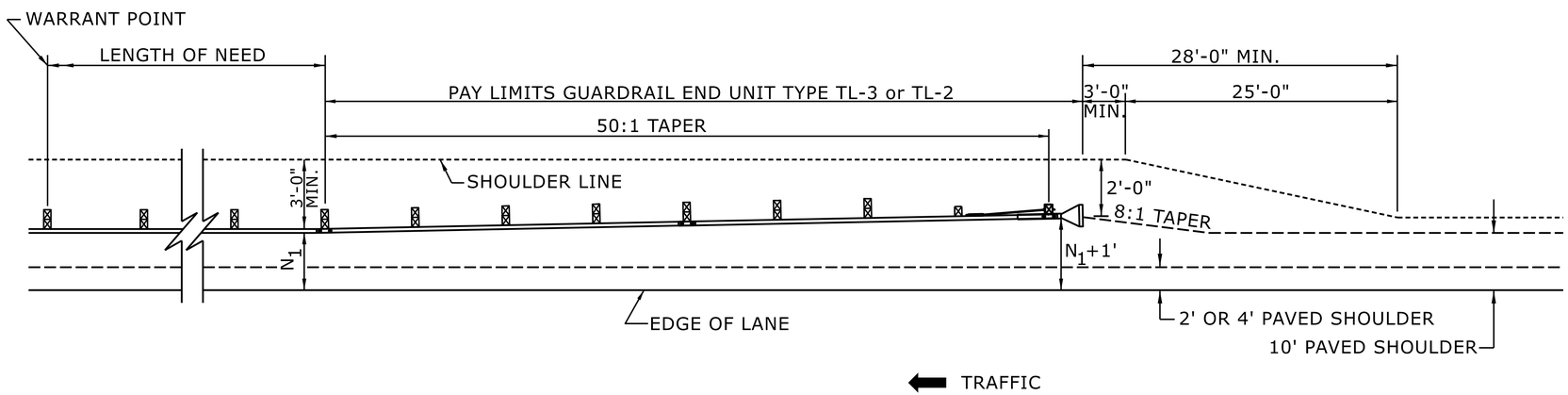

FOR POSTED SPEEDS ≥ 45mph USE GREU TYPE TL-3
FOR POSTED SPEEDS < 45mph USE GREU TYPE TL-2

DETAIL OF BEGINNING OF GUARDRAIL IN CUT OR FILL SECTION

STATE OF
NORTH CAROLINA
DEPT. OF TRANSPORTATION
DIVISION OF HIGHWAYS
RALEIGH, N.C.

ROADWAY DETAIL DRAWING FOR
GUARDRAIL PLACEMENT

SHEET 6 OF 15

862D01

NORTH CAROLINA PROFESSIONAL ENGINEER SEAL 033144 NICOLE M. HACKLER

Signed by: Nicole M Hackler
5884323D341664C5...

DOCUMENT NOT CONSIDERED FINAL
UNLESS ALL SIGNATURES COMPLETED

CONTRACTS STANDARDS AND DEVELOPMENT UNIT
Office 919-707-6950 FAX 919-250-4119

SEE TITLE BLOCK

ORIGINAL BY: S.CALHOUN DATE: 7-25-2024
MODIFIED BY: DATE:
CHECKED BY: DATE:
FILE SPEC.:

Docusign Envelope ID: DD9F6508-6E9E-80AD-8376-9406F5FAEFEF

PROJECT REFERENCE NO.	SHEET NO.
HB-0053	2C-5

STATE OF
NORTH CAROLINA
DEPT. OF TRANSPORTATION
DIVISION OF HIGHWAYS
RALEIGH, N.C.

ENGLISH DETAIL DRAWING FOR
MODIFIED CONCRETE FLUME
WITH CONCRETE OR RIP-RAP DITCH

SHEET 1 OF 1

MODFLMDTCH

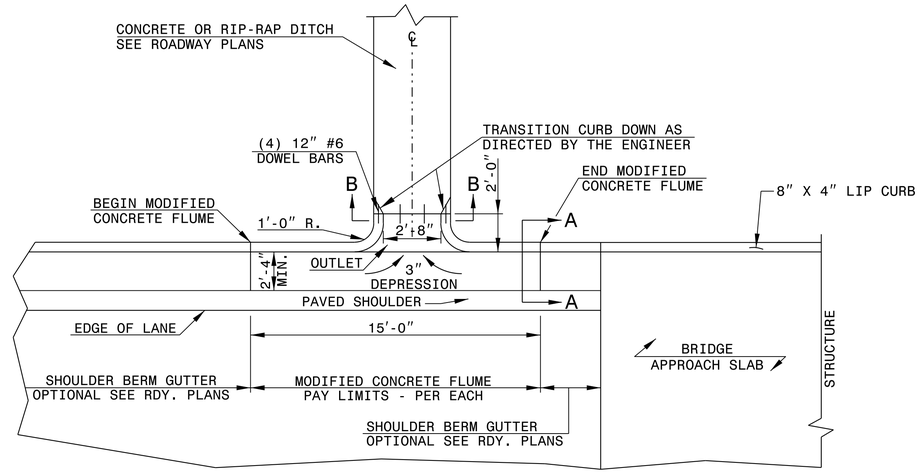

PLAN VIEW

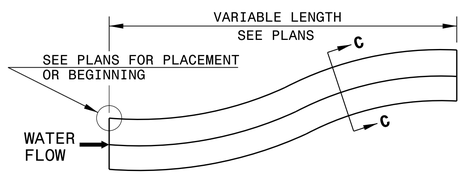

DOWNGRADE OR SAG

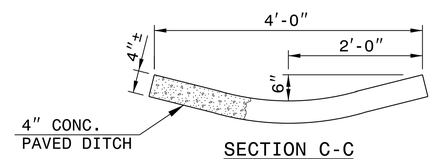

SECTION C-C

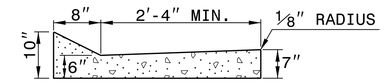

SECTION A-A

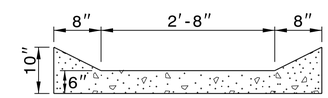

SECTION B-B

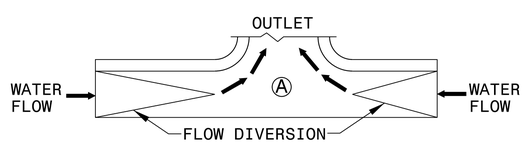

SAG

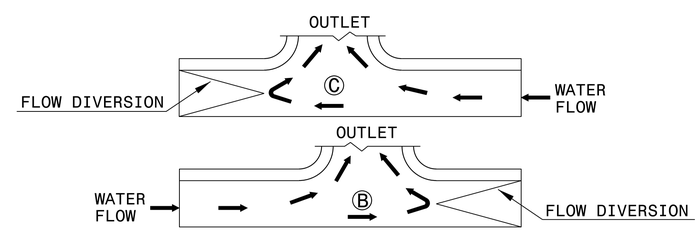

DOWN GRADE

FLOW DIVERSION EXAMPLES

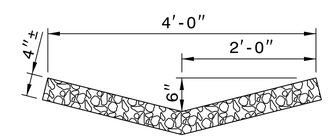

RIP-RAP LINED DITCH

NOTES:

- CONSTRUCT MODIFIED CONCRETE FLUME AND SHOULDER BERM GUTTER IN ACCORDANCE WITH THIS DETAIL.
- CONSTRUCT CONCRETE DITCH IN ACCORDANCE WITH STD. DWG. NO. 850.01.
- CONSTRUCT RIP RAP LINED DITCH IN ACCORDANCE WITH THIS DETAIL, IF CALLED FOR IN PLANS.
- CONCRETE OR RIP RAP LINED DITCH SHALL BE THE TYPE AND LENGTH SPECIFIED BY THE ROADWAY PLANS. THE DITCH SHALL TERMINATE AS SHOWN ON THE PLANS. IF NO TERMINATION IS INDICATED PLACE RIP-RAP AT THE END OF THE DITCH AS INDICATED BY STD. DWG. 876.02 FOR AN 18″ PIPE. TRANSITIONS FROM THE DITCH TO TERMINATION SHALL BE AS DIRECTED BY THE ENGINEER.
- MODIFICATIONS SHALL BE AS DICTATED BY SITE CONDITIONS AND DIRECTED BY THE ENGINEER.

STATE OF
NORTH CAROLINA
DEPT. OF TRANSPORTATION
DIVISION OF HIGHWAYS
RALEIGH, N.C.

ENGLISH DETAIL DRAWING FOR
MODIFIED CONCRETE FLUME
WITH CONCRETE OR RIP-RAP DITCH

SHEET 1 OF 1

MODFLMDTCH

DOCUMENT NOT CONSIDERED FINAL
UNLESS ALL SIGNATURES COMPLETED

NORTH CAROLINA PROFESSIONAL SEAL 33144 ENGINEER NICOLE M. HECKLER

Signed by:
Nicole M Heckler
5884323D34164C8...

CONTRACT STANDARDS
AND DEVELOPMENT UNIT
Office 919-707-6950 FAX 919-250-4119

SEE PLATE FOR TITLE

ORIGINAL BY: E.E. Ward DATE: Apr. 2002
MODIFIED BY: J.S. Howerton DATE: October 2017
CHECKED BY: DATE:
FILE SPEC.: w:details\stand\modifiedflume.dgn

18-OCT-2017 14:17
S:\Contracts\Contracts\Special Details\ericward\usr\details\stand\modifiedflume.dgn
jhowerton AT CSD-212595

5/26/20

STATE OF NORTH CAROLINA
DIVISION OF HIGHWAYS

HB-0053
38-1

PREPARED BY

ms consultants, inc.
5464 Wake Park Blvd.
Suite 160
Raleigh, NC 27607
NC License Number: C-3236

DOCUMENT NOT CONSIDERED FINAL UNLESS ALL SIGNATURES COMPLETED

SUMMARY OF EARTHWORK
VOLUME IN CUBIC YARDS

STATION	STATION	UNCL. EXCAV.	EMBANK. +15%	BORROW	WASTE
-L- 10+10.00	-L- 11+82.31	364	12		351
	(BEGIN BRIDGE)				
SUBTOTAL:		364	12		351
-L- 12+59.69	-L- 14+45.00	257	26		231
(END BRIDGE)					
SUBTOTAL:		257	26		231
TOTAL:		519	38		583
WASTE IN LIEU OF BORROW					
PROJECT TOTAL:		519	38		583
EST. 5% TO REPLACE TOP SOIL ON BORROW PIT					
GRAND TOTAL:		519	38		583
SAY:		550			

EST. DDE =26 CY
EST. UNDERCUT (CONTINGENCY) =225 CY
EST. SELECT GRANULAR MATERIAL (CONTINGENCY) =200 CY
EST. GEOTEXTILE FOR SOIL STABILIZATION (CONTIGENCY) =200 SY

Earthwork quantities are calculated by ms consultants. These earthwork quantities are based in part on subsurface data provided by the Geotechnical Engineering Unit.

Approximate quantities only. Unclassified excavation,fine grading, clearing and grubbing, and removal of existing pavement will be paid for at the lump sum price for "Grading".

SUMMARY OF EXISTING ASPHALT PAVEMENT REMOVAL

SURVEY LINE	STATION	STATION	LOCATION LT/RT/CL	YD³
-L-	11+10	11+96	CL	135
-L-	12+54	13+80	CL	193
			TOTAL:	328
			SAY:	345

SHOULDER BERM GUTTER SUMMARY

SURVEY LINE	STATION	STATION	LENGTH
-L- LT	12+59	12+80	24
		TOTAL:	24
		SAY:	30

"N" = DISTANCE FROM EDGE OF LANE TO FACE OF GUARDRAIL.
TOTAL SHOULDER WIDTH = DISTANCE FROM EDGE OF TRAVEL LANE TO SHOULDER BREAK POINT.
FLARE LENGTH = DISTANCE FROM LAST SECTION OF PARALLEL GUARDRAIL TO END OF GUARDRAIL.
W = TOTAL WIDTH OF FLARE FROM BEGINNING OF TAPER TO END OF GUARDRAIL.
G = GATING IMPACT ATTENUATOR TYPE 350
NG = NON-GATING IMPACT ATTENUATOR TYPE 350

GUARDRAIL SUMMARY

SURVEY LINE	BEG. STA.	END STA.	LOCATION	LENGTH			WARRANT POINT		"N" DIST. FROM E.O.L.	TOTAL SHOULDER WIDTH	FLARE LENGTH		W		ANCHORS									IMPACT ATTENUATOR TYPE 350			REMOVE EXISTING GUARDRAIL	REMOVE AND RESET EXISTING GUARDRAIL	REMARKS
				STRAIGHT	SHOP CURVED	DOUBLE FACED	APPROACH END	TRAILING END			APPROACH END	TRAILING END	APPROACH END	TRAILING END	GREU TL-2	TYPE III	AT-1	TYPE III SHOP CURVED						EA	G	NG			
-L-	11+24	11+82	LT	56.25				11+82	4	5.33		25		0.5	1	1													
-L-	11+26	11+82	RT	56.25			11+82		4	3.50	25		0.5		1	1													
-L-	12+59	13+20	LT	68.75			12+59		4	5.33	25		0.5		1	1													
-L-	12+59	13+15	RT	56.25				12+59	4	3.50		25		0.5	1	1													
		SUBTOTAL		237.50																									
		ANCHOR DEDUCTIONS																											
		GREU TL-2	4 @ 25.00	-100.00																									
		TYPE III	4 @ 18.75	-75.00																									
		PROJECT TOTAL		62.50											4	4													
		SAY		75.00																									
				EXTRA GUARDRAIL POSTS = 5 EA																									

RALC4406WT

COMPUTED BY:	Karen Hefner, PE	DATE:	5-27-25; Rev 5/19/26
CHECKED BY:	W. Herbert Turner, Jr., PE	DATE:	5-27-25; Rev 8/11/26

NORTH CAROLINA DEPARTMENT OF TRANSPORTATION
DIVISION OF HIGHWAYS

PROJECT NO.	SHEET NO.
HB-0053	3D-1

Note: Invert Elevations indicated are for Bid Purposes only and shall not be used for project construction stakeout. See "Standard Specifications For Roads and Structures, Section 300-5".

LIST OF PIPES, ENDWALLS, ETC. (FOR PIPES 48 INCHES & UNDER)

| LINE & STATION / SIZE / THICKNESS OR GAUGE | OFFSET | STRUCTURE NUMBER FROM | STRUCTURE NUMBER TO | TOP ELEVATION FT. | INVERT ELEVATION FT. | INVERT ELEVATION FT. | MINIMUM REQUIRED SLOPE % | Drainage Pipe (RCP, CSP, HDPE, PVC, or PP PIPE) 15 | 18 | 24 | 30 | 36 | 42 | 48 | | DO NOT USE RCP | DO NOT USE CSP | DO NOT USE HDPE | DO NOT USE PVC | DO NOT USE PP PIPE | R. C. PIPE CLASS III 15 | 18 | 24 | 30 | 36 | 42 | 48 | | R. C. PIPE CLASS IV 15 | 18 | 24 | 30 | 36 | 42 | 48 | | R. C. PIPE CLASS V 15 | 18 | 24 | 30 | 36 | 42 | 48 | | 15" SIDE DRAIN PIPE | 18" SIDE DRAIN PIPE | ENDWALLS STD. 838.01 OR STD. 838.11 (UNLESS NOTED OTHERWISE) CY | REINFORCED ENDWALLS CY | DRAINAGE STRUCTURE MASONRY CY | QUANTITIES FOR DRAINAGE STRUCTURES NOTE: TOTAL LIN. FT. FOR PAY QUANTITY SHALL BE A + (1.3 X B) 0' THRU 5' EACH | A 5' THRU 10' LIN. FT. | B 10' AND ABOVE LIN. FT. | C.B. STD. 840.01 OR STD. 840.02 | FRAME, GRATES, AND HOOD STD. 840.03 GRATE TYPE E | F | G | CONCRETE TRANSITIONAL SECTION D.I. STD. 852.04 OR STD. 852.06 | C.B. STD. 852.05 | OPEN THROAT C.B. STD. 840.04 OR STD. 840.05 | CONCRETE BRIDGE APPROACH D.I. STD. 840.13 | D.I. STD. 840.14 OR STD. 840.15 | D.I. FRAME AND GRATES STD. 840.16 | G.D.I. TYPE "A" STD. 840.17 OR STD. 840.26 | G.D.I. TYPE "B" STD. 840.18 OR STD. 840.27 | G.D.I. TYPE "D" STD. 840.19 OR STD. 840.28 | G.D.I. (N.S. SAG) FRAME W/ GRATE STD. 840.24 | G.D.I. (N.S. SAG) FRAME W/ 2 GRATES STD. 840.24 | G.D.I. (N.S. FLAT) FRAME W/ GRATE STD. 840.29 | G.D.I. (N.S. FLAT) FRAME W/ 2 GRATES STD. 840.29 | DRIVEWAY D.I. STD. 840.30 | FRAME W/ GRATE FOR DRIVEWAY STD. 840.30 | J.B. STD. 840.31 OR STD. 840.32 | ANGLED VANE GRATES AND FRAMES STD. 840.33 | T.B.J.B. STD. 840.34 | T.B.D.I. STD. 840.35 | T.B.D.I. FOR STEEL GRATES STD. 840.36 | TEMP STEEL PLATE COVER MASONRY DRAINAGE | 15" DRAINAGE PIPE ELBOW | 15" C.S. ELBOW | 18" C.S. ELBOW | BERM DITCH OUTLET STD. 850.10 (PER EACH) | BERM DITCH OUTLET STD. 850.11 (PER EACH) | MODIFIED CONC. FLUME (PER EACH) | 4" CONCRETE PAVED DITCH SY | PIPE REMOVAL LIN. FT. | REMARKS |
|---|---|---|---

COMPUTED BY: __ CRL	9/9/2025
CHECKED BY: ___ MHS	9/9/2025

(9-17-24)

STATE OF NORTH CAROLINA
DIVISION OF HIGHWAYS

PROJECT NO.	SHEET NO.
HB-0053	3G-1

SUMMARY OF SUBSURFACE DRAINAGE

LINE	Station	Station	Location LT/RT/CL	Drain Type* UD/BD/SD	LF
CONTINGENCY				SD	100
				TOTAL LF:	100

*UD = Underdrain
*BD = Blind Drain
*SD = Subsurface Drain

Docusign Envelope ID: 6C837AB0-9C79-8CDC-82A5-CFA1FD182D78

11/14/23

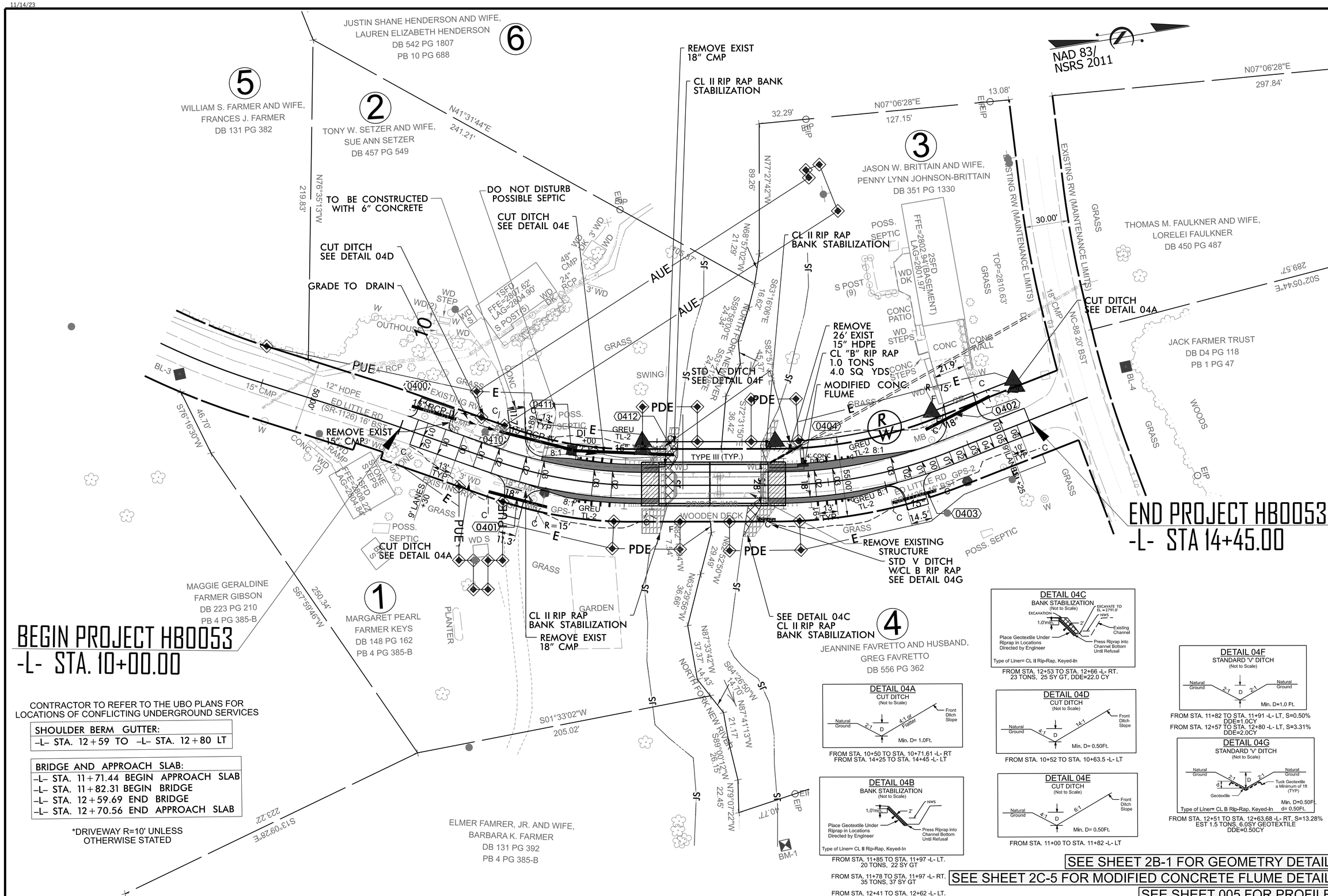

CONTRACTOR TO REFER TO THE UBO PLANS FOR LOCATIONS OF CONFLICTING UNDERGROUND SERVICES

SHOULDER BERM GUTTER:
-L- STA. 12+59 TO -L- STA. 12+80 LT

BRIDGE AND APPROACH SLAB:
-L- STA. 11+71.44 BEGIN APPROACH SLAB
-L- STA. 11+82.31 BEGIN BRIDGE
-L- STA. 12+59.69 END BRIDGE
-L- STA. 12+70.56 END APPROACH SLAB

*DRIVEWAY R=10' UNLESS OTHERWISE STATED

DETAIL 04A
CUT DITCH
(Not to Scale)
Natural Ground, 2:1, D, 4:1 or Flatter, Front Ditch Slope
Min. D= 1.0Ft.
FROM STA. 10+50 TO STA. 10+71.61 -L- RT
FROM STA. 14+25 TO STA. 14+45 -L- LT

DETAIL 04B
BANK STABILIZATION
(Not to Scale)
1.0'min., NWS, 2', Place Geotextile Under Riprap in Locations Directed by Engineer, Press Riprap into Channel Bottom Until Refusal
Type of Liner= CL II Rip-Rap, Keyed-In
FROM STA. 11+85 TO STA. 11+97 -L- LT.
20 TONS, 22 SY GT
FROM STA. 11+78 TO STA. 11+97 -L- RT.
35 TONS, 37 SY GT
FROM STA. 12+41 TO STA. 12+62 -L- LT.
20 TONS, 22 SY GT

DETAIL 04C
BANK STABILIZATION
(Not to Scale)
EXCAVATION, 1.0'min., 2', NWS, EXCAVATE TO EL.= 2791.0', Existing Channel, Place Geotextile Under Riprap in Locations Directed by Engineer, Press Riprap into Channel Bottom Until Refusal
Type of Liner= CL II Rip-Rap, Keyed-In
FROM STA. 12+53 TO STA. 12+66 -L- RT.
23 TONS, 25 SY GT, DDE=22.0 CY

DETAIL 04D
CUT DITCH
(Not to Scale)
Natural Ground, 4:1, D, 14:1, Front Ditch Slope
Min. D= 0.50Ft.
FROM STA. 10+52 TO STA. 10+63.5 -L- LT

DETAIL 04E
CUT DITCH
(Not to Scale)
Natural Ground, 4:1, D, 6:1, Front Ditch Slope
Min. D= 0.50Ft.
FROM STA. 11+00 TO STA. 11+82 -L- LT

DETAIL 04F
STANDARD 'V' DITCH
(Not to Scale)
Natural Ground, 2:1, D, 2:1, Natural Ground
Min. D=1.0 Ft.
FROM STA. 11+82 TO STA. 11+91 -L- LT, S=0.50%
DDE=1.0CY
FROM STA. 12+57 TO STA. 12+80 -L- LT, S=3.31%
DDE=2.0CY

DETAIL 04G
STANDARD 'V' DITCH
(Not to Scale)
Natural Ground, 2:1, D, 2:1, Natural Ground, d, Geotextile, Tuck Geotextile a Minimum of 1ft (TYP)
Min. D=0.50Ft.
Type of Liner= CL B Rip-Rap, Keyed-In d= 0.50Ft.
FROM STA. 12+51 TO STA. 12+63.68 -L- RT, S=13.28%
EST 1.5 TONS, 6.0SY GEOTEXTILE
DDE=0.50CY

SEE SHEET 2B-1 FOR GEOMETRY DETAIL
SEE SHEET 2C-5 FOR MODIFIED CONCRETE FLUME DETAIL
SEE SHEET 005 FOR PROFILE

HB-0053
004

NORTH CAROLINA
DEPARTMENT OF TRANSPORTATION
ASHE COUNTY

ROADWAY DESIGN UNIT

ROADWAY DESIGN ENGINEER
NORTH CAROLINA PROFESSIONAL SEAL 043023 ENGINEER DAVID V. JANOSKO
DocuSigned by: David Janosko 8/17/2026
CERTIFICATE NO.

HYDRAULICS ENGINEER
NORTH CAROLINA PROFESSIONAL SEAL 021162 ENGINEER W. HERBERT TURNER, JR.
DocuSigned by: Herb Turner 8/17/2026
CERTIFICATE NO.

PREPARED BY
ms consultants, inc.
5444 Wade Park Blvd.
Suite 160
Raleigh, NC 27607
NC License Number : C-3230

MI ENGINEERING
1011 SCHAUB DRIVE, SUITE 100
RALEIGH, NC 27606
(919) 851-6606
FIRM PE NUMBER: P-0671

DOCUMENT NOT CONSIDERED FINAL UNLESS ALL SIGNATURES COMPLETED

REVISIONS

MSCONSULTANTS/sstuit 8/17/2026

Docusign Envelope ID: FA9CB017-8B77-8946-805B-724D79E4992B

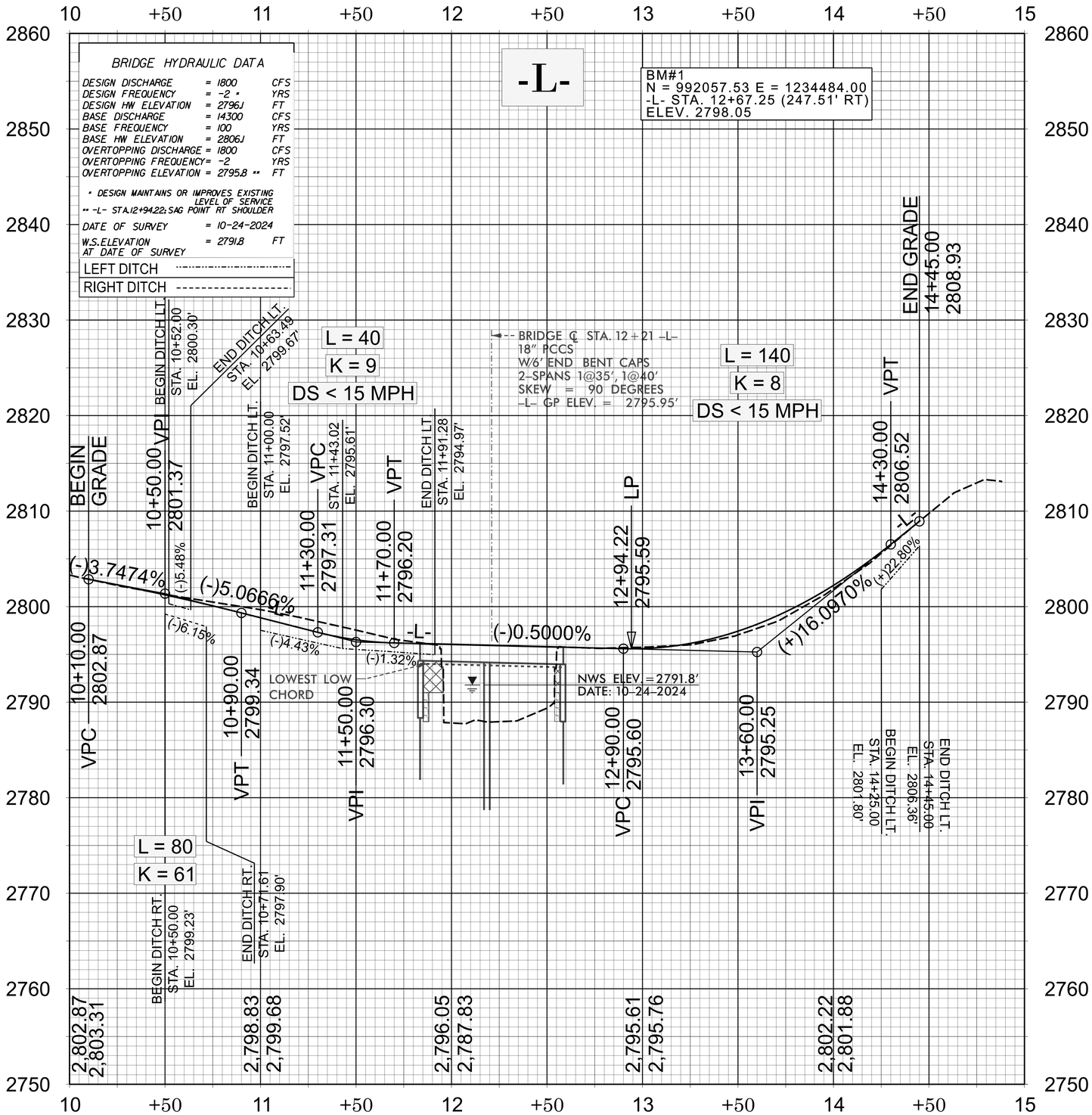

SEE SHEET 004 FOR PLAN

HB-0053

005

NORTH CAROLINA
DEPARTMENT OF TRANSPORTATION
ASHE COUNTY

ROADWAY DESIGN UNIT

ROADWAY DESIGN ENGINEER
NORTH CAROLINA PROFESSIONAL SEAL 043023 ENGINEER DAVID V. JANOSKO
David Janosko 7/17/2026
DOCUSIGNED BY:

HYDRAULICS ENGINEER
NORTH CAROLINA PROFESSIONAL SEAL 021162 ENGINEER W. HERBERT TURNER, JR.
Herb Turner 7/17/2026
DOCUSIGNED BY:

PREPARED BY
ms consultants, inc.
5444 Wade Park Blvd.
Suite 160
Raleigh, NC 27607
NC License Number: C-3230

MI ENGINEERING
1011 SCHAUB DRIVE, SUITE 100
RALEIGH, NC 27606
(919) 851-6606
FIRM PE NUMBER: P-0671

DOCUMENT NOT CONSIDERED FINAL UNLESS ALL SIGNATURES COMPLETED

REVISIONS

09/08/99

TIP PROJECT: HB-0053

STATE	STATE PROJECT REFERENCE NO.	SHEET NO.	TOTAL SHEETS
N.C.	HB-0053	RW01	6

STATE OF NORTH CAROLINA
DIVISION OF HIGHWAYS

SURVEY CONTROL, EXISTING CENTERLINES, RIGHT OF WAY, EASEMENTS AND PROPERTY TIES

ASHE COUNTY

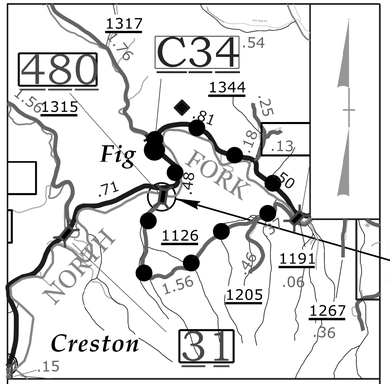

VICINITY MAP (NTS)

OFFSITE DETOUR ROUTE

NAD 83/NA 2011

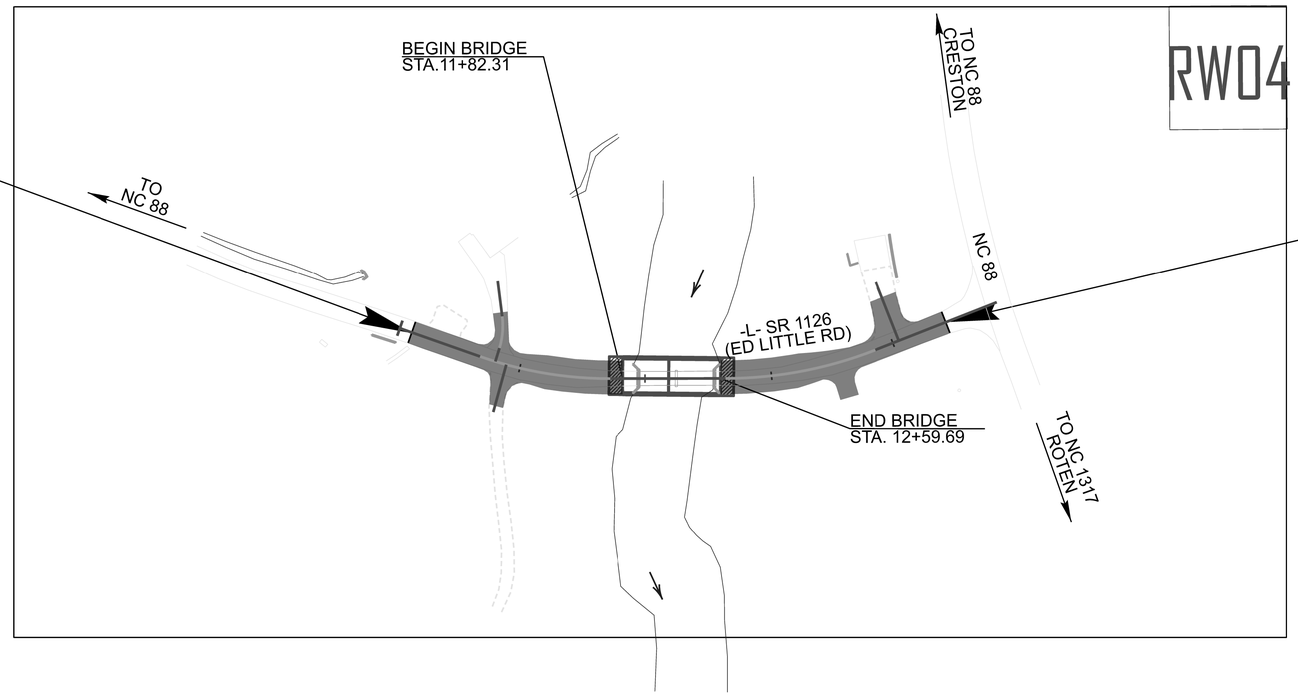

BEGIN PROJECT HB-0053
-L- STA 10+10.00

END PROJECT HB-0053
-L- STA 14+45.00

DOCUMENT NOT CONSIDERED FINAL UNLESS ALL SIGNATURES COMPLETED

GRAPHIC SCALES

60' 30' 0' 60' 120'

DATUM DESCRIPTION

THE LOCALIZED COORDINATE SYSTEM DEVELOPED FOR THIS PROJECT IS BASED ON THE STATE PLANE COORDINATES ESTABLISHED BY NCDOT FOR MONUMENT HB0053-2
WITH NAD83/2011 STATE PLANE GRID COORDINATES OF
NORTHING: 992057.535 EASTING: 1234484.000
ELEVATION: 2798.05
THE AVERAGE COMBINED GRID FACTOR USED ON THIS PROJECT (GROUND TO GRID) IS: 0.999961721
ALL LINEAR DIMENSIONS ARE LOCALIZED HORIZONTAL DISTANCES
VERTICAL DATUM USED IS NAVD 88

Prepared in the Office of:

wsp

GEOSPHERE LAND SURVEYING OF NC
128 TALBERT ROAD
MOORESVILLE NC 28117
FIRM C-5241

2024 STANDARD SPECIFICATIONS

RIGHT OF WAY DATE: 8/15/2025

LETTING DATE: 9/16/2026

PROFESSIONAL LAND SURVEYOR

NORTH CAROLINA PROFESSIONAL SEAL L-5617 LAND SURVEYOR SARAH J. VINCENT

SIGNATURE: *DATE:* 9/16/2025

PRIMARY SURVEY CONTROL SHEET

BASELINE POINTS TABLE				
POINT	**DESC**	**NORTH**	**EAST**	**ELEVATION**
1	**GPS-1**	**991772.196**	**1234428.387**	**2799.223**
2	**GPS-2**	**992057.535**	**1234484.000**	**2798.049**

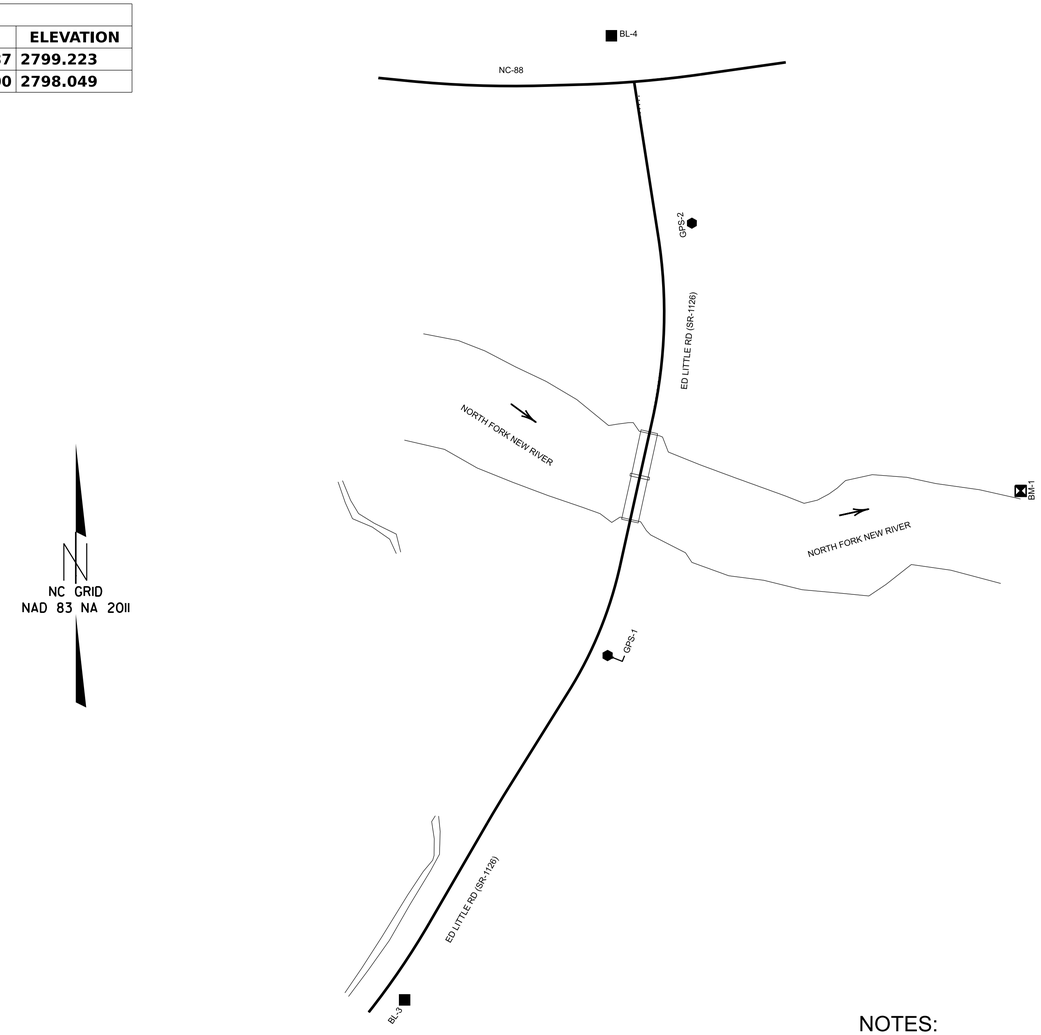

I, Christopher K, Drye, PLS, certify that the Project Control was verified by NV5 Engineers and Consultants, Inc. The actual GPS survey was performed by NCDOT and the following information was used to perform the survey:

Class of survey: AA
Type of GPS field procedure: RTN
Dates of survey: 04/08/2022
Datum/Epoch: NAD 83/2011
Published/Fixed-control use: N/A
Localized around: HB-0053-2
Northing: 992057.535
Easting: 1234484.000
Combined grid factor: 0.999961721
Geoid model: GEOID18
Units: US Survery Feet

This day 3/18/2024.

DocuSigned by:
E4E4B1C69CEC4D3...

Professional Land Surveyor L-5456

NOTES:

1. THE SURVEY CONTROL DATA FOR THIS PROJECT HAS BEEN COMPILED FROM VARIOUS SOURCES. IF FURTHER INFORMATION REGARDING PROJECT CONTROL IS NEEDED, PLEASE CONTACT THE LOCATION AND SURVEYS UNIT.

50' 25' 0 50' 100'
1" = 50'

HB0053
R/W D2C-1

NORTH CAROLINA DEPARTMENT OF TRANSPORTATION

PROFESSIONAL LAND SURVEYOR
NORTH CAROLINA PROFESSIONAL SEAL L-5456 LAND SURVEYOR CHRISTOPHER K. DRYE
3/18/2024

DOCUMENT NOT CONSIDERED FINAL UNLESS ALL SIGNATURES ARE COMPLETED

2018 STANDARD SPECIFICATIONS

TIP PROJECT: HB-0053
County: Ashe

PREPARED FOR

LOCATION AND SURVEYS UNIT

PREPARED BY

PREPARED BY:
NV5
8514 MCALPINE PARK DRIVE, SUITE 135
CHARLOTTE, NC 28211
phone: 704.537.7300 NV5.com
NC License # F-1333

5/26/20

5/26/20

SECONDARY SURVEY CONTROL SHEET

W/ EXISTING CENTERLINE ALIGNMENTS PRIOR TO CONSTRUCTION

I, Christopher K. Drye, PLS, certify that the Secondary Baseline Control for this project was completed under my direct and responsible charge from an actual survey made under my supervision; that all horizontal closures had a minimum ratio of precision of 1:20,000 (Class AA) and Vertical accuracy to 1:10,000 (Class A). Field work was performed from 02/01/2024 to 02/13/2024 , and all coordinates are based on NAD 83/2011 and all elevations are based on NAVD 88; that this survey was performed to meet the requirements of 21NCAC 56.1600 as applicable.

This day 3/18/2024.

DocuSigned by:
E4E4B1C69CEC4D3...

Professional Land Surveyor L-5456

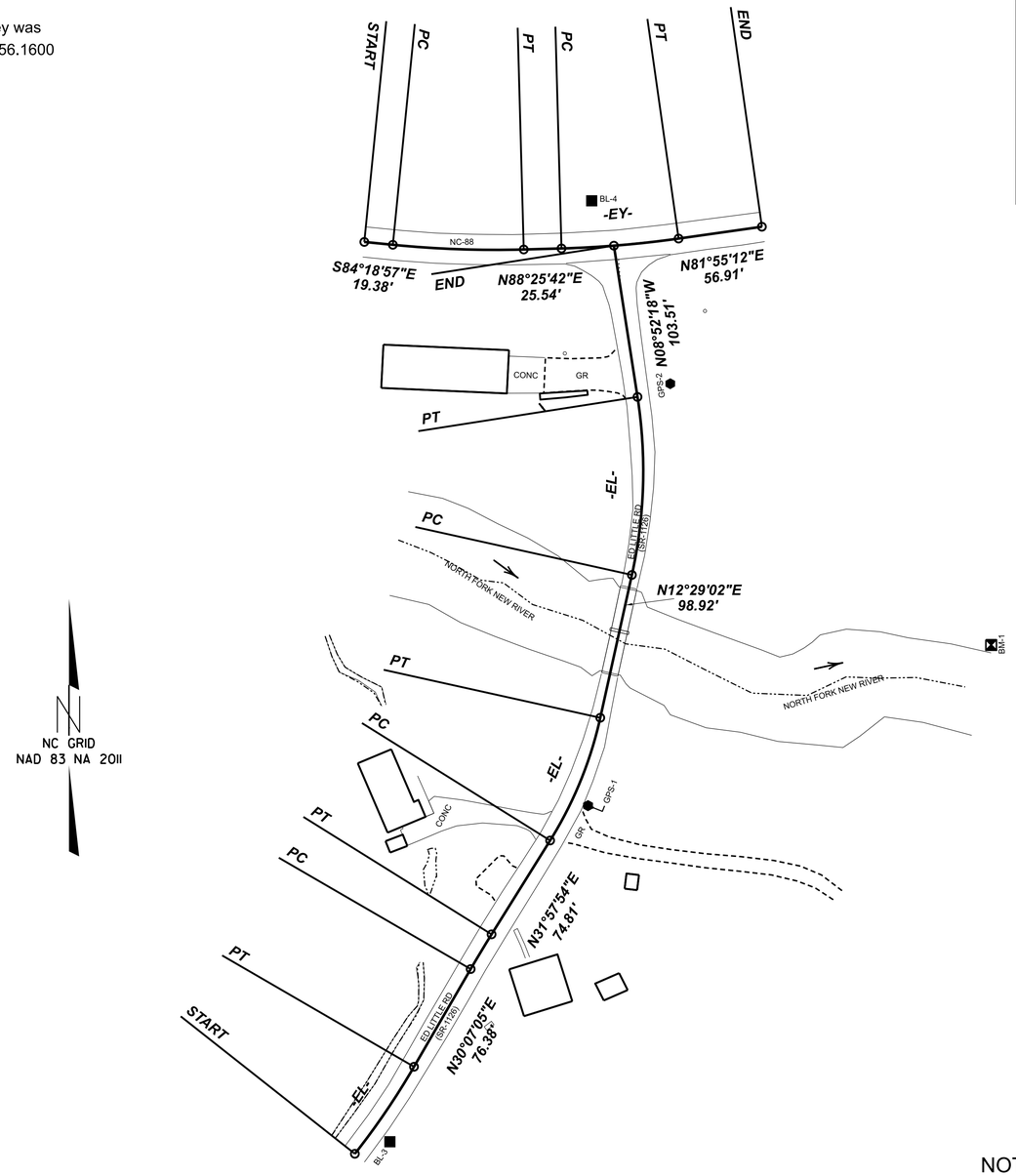

EXISTING ALIGNMENT NAME:EL									
POINT	NORTHING	EASTING	BEARING	DIST	DELTA	D	L	T	R
PC	991536.768	1234270.694							
CURVE					8.162°" Left	11.459°"	71.226	35.673	500
PT	991595.629	1234310.695							
LINE			N30°07'05""E	76.375					
PC	991661.693	1234349.018							
CURVE					1.847°" Right	6.741°"	27.398	13.7	850
PT	991685.166	1234363.146							
LINE			N31°57'54""E	74.805					
PC	991748.629	1234402.748							
CURVE					19.481°" Left	21.621°"	90.102	45.49	265
PT	991831.636	1234436.664							
LINE			N12°29'02""E	98.923					
PC	991928.22	1234458.047							
CURVE					21.356°" Left	17.629°"	121.136	61.279	325
PT	992048.596	1234461.843							
LINE			N08°52'18""W	103.512					
END	992150.869	1234445.879							

EXISTING ALIGNMENT NAME:EY									
POINT	NORTHING	EASTING	BEARING	DIST	DELTA	D	L	T	R
START	992153.395	1234277.088							
LINE			S84°18'57""E	19.384					
PC	992151.475	1234296.377							
CURVE					7.256°" Left	8.185°"	88.646	44.382	700
PT	992148.296	1234384.907							
LINE			N88°25'42""E	25.538					
PC	992148.997	1234410.435							
CURVE					6.508°" Left	8.185°"	79.515	39.8	700
PT	992155.683	1234489.625							
LINE			N81°55'12""E	56.905					
END	992163.681	1234545.965							

BASELINE POINTS TABLE				
POINT	DESC	NORTH	EAST	ELEVATION
1	GPS-1	991772.196	1234428.387	2799.215
2	GPS-2	992057.535	1234484.000	2798.049
3	BL-3	991545.027	1234294.346	2809.517
4	BL-4	992181.116	1234430.926	2823.584

BENCHMARK TABLE				
BENCHMARK	NORTHING	EASTING	ELEVATION	DESCRIPTION
BM-1	991880.859	1234701.030	2794.210	RRSPK IN 20" OAK

50' 25' 0 50' 100'
1" = 50'

NOTES:

1. THE SURVEY CONTROL DATA FOR THIS PROJECT HAS BEEN COMPILED FROM VARIOUS SOURCES. IF FURTHER INFORMATION REGARDING PROJECT CONTROL IS NEEDED, PLEASE CONTACT THE LOCATION AND SURVEYS UNIT.

HB-0053
R/W | 02C-1

NORTH CAROLINA DEPARTMENT OF TRANSPORTATION

PROFESSIONAL LAND SURVEYOR
NORTH CAROLINA PROFESSIONAL SEAL L-5456 LAND SURVEYOR CHRISTOPHER K. DRYE
3/18/2024

DOCUMENT NOT CONSIDERED FINAL UNLESS ALL SIGNATURES ARE COMPLETED

2018 STANDARD SPECIFICATIONS

TIP PROJECT: HB-0053
County: Ashe

PREPARED FOR

LOCATION AND SURVEYS UNIT

PREPARED BY

PREPARED BY:
NV5
8514 MCALPINE PARK DRIVE, SUITE 135
CHARLOTTE, NC 28211
phone: 704.537.7300 NV5.com
NC License # F-1333

Docusign Envelope ID: 8EDAAAC6-EE60-4EEA-8BD3-E06F2E480DD2

5/26/20

PROPOSED ALIGNMENT CONTROL SHEET

I, Sarah J. Vincent, PLS, CERTIFY THAT THE DATA COMPILED CAME FROM AVAILABLE SURVEYS/MAPPING PERFORMED BY OTHERS AND PROVIDED TO ME BY NCDOT AND DO NOT CERTIFY TO THE ACCURACY OR QUALITY OF THE INDIVIDUAL DATA SOURCES.

THIS 12TH DAY OF SEPTEMBER, 2025.

DocuSigned by:
Sarah Vincent
8605417B8A5848A...

PROFESSIONAL LAND SURVEYOR L-5617

PROPOSED ALIGNMENT: L												
POINT	STATION	NORTHING	EASTING	BEARING	DIST	DELTA	D	L	T	R	LT	ST
START	10+00.00	991685.1663	1234363.1458	N31°57'53.6"E	67.25							
PC	10+67.25	991742.2213	1234398.7491	N22°13'27.8"E	104.56	19°28'51.7"	18°32'32.4"	105.06	53.04	309.00		
PT	11+72.31	991839.0109	1234438.2963	N12°29'01.9"E	91.37							
PC	12+63.68	991928.2203	1234458.0472	N01°48'21.9"E	120.44	21°21'20.0"	17°37'46.1"	121.14	61.28	325.00		
PT	13+84.82	992048.5961	1234461.8430	N08°52'18.0"W	103.51							
END	14+88.33	992150.8695	1234445.8792									

NOTES:

1. THE PROPOSED ALIGNMENT CONTROL DATA FOR THIS PROJECT HAS BEEN COMPILED FROM VARIOUS SOURCES. IF FURTHER INFORMATION REGARDING PROJECT CONTROL IS NEEDED, PLEASE CONTACT THE LOCATION AND SURVEYS UNIT.

HB-0053

R/W | 020-1

NORTH CAROLINA DEPARTMENT OF TRANSPORTATION

STATE OF NORTH CAROLINA DEPARTMENT OF TRANSPORTATION

PROFESSIONAL LAND SURVEYOR

NORTH CAROLINA PROFESSIONAL SEAL L-5617 LAND SURVEYOR SARAH J. VINCENT

DOCUMENT NOT CONSIDERED FINAL UNLESS ALL SIGNATURES ARE COMPLETED

2024 STANDARD SPECIFICATIONS

TIP PROJECT: HB-0053
County Ashe

PREPARED FOR

LOCATION AND SURVEYS UNIT

PREPARED BY

wsp

GEOSPHERE LAND SURVEYING OF NC
129 TALBERT ROAD
MOORESVILLE NC 28117
FIRM C-5241

Docusign Envelope ID: 8EDAAAC6-EE60-4EEA-8BD3-E06F2E480DD2

5/26/20

RIGHT OF WAY CONTROL SHEET

I , Sarah J. Vincent , PLS, CERTIFY THAT THE RIGHT OF WAY AND PERMANENT EASEMENT MONUMENTATION FOR THIS PROJECT SHOWN HEREIN WAS COMPLETED UNDER MY DIRECT AND RESPONSIBLE CHARGE FROM AN ACTUAL SURVEY MADE UNDER MY SUPERVISION; THAT ALL HORIZONTAL CLOSURES HAD A MINIMUM RATIO OF PRECISION OF 1:10,000 (CLASS A). FIELD WORK WAS PERFORMED FROM 8/27/2025 TO 9/9/2025, AND ALL COORDINATES ARE BASED ON NAD83/NA 2011; THAT THIS SURVEY WAS PERFORMED TO MEET THE REQUIREMENTS OF 21NCAC 56.1600 AS APPLICABLE.

THIS 12TH DAY OF SEPTEMBER, 2024.

DocuSigned by:
Sarah Vincent
8605417B8A5848A...

PROFESSIONAL LAND SURVEYOR L-5617

PERMANENT ROW MARKER IRON PIN AND CAP: L			
STATION	OFFSET	NORTH	EAST
11+72.31	-25.00	991844.4107	1234413.8864
11+72.31	-30.00	991845.4958	1234409.0056
12+63.68	-30.00	991934.7053	1234428.7565
13+84.82	-30.00	992043.9694	1234432.2019
14+45.00	-30.00	992103.4294	1234422.9208
14+45.00	-25.00	992104.2005	1234427.8610

PERMANENT EASEMENT MARKER IRON PIN AND CAP: L				
STATION	OFFSET	NORTH	EAST	
11+54.00	44.00	991809.2176	1234476.1307	
11+54.00	25.33	991814.3266	1234458.1714	
11+72.31	-54.00	991850.6799	1234385.5722	
11+98.00	25.00	991858.6847	1234468.2575	POINT NOT SET - FALLS IN CREEK
11+98.00	44.00	991854.5776	1234486.8082	POINT NOT SET - FALLS IN CREEK
12+10.00	-30.00	991882.2901	1234417.1518	POINT NOT SET - FALLS IN CREEK
12+10.00	-54.00	991887.4780	1234393.7192	POINT NOT SET - FALLS IN CREEK
12+32.00	45.00	991887.5575	1234495.1342	POINT NOT SET - FALLS IN CREEK
12+32.00	25.00	991891.8809	1234475.6071	POINT NOT SET - FALLS IN CREEK
12+47.00	-30.00	991918.4153	1234425.1499	SET WITH 60P NAIL
12+47.00	-59.00	991924.6841	1234396.8356	POINT NOT SET - FALLS IN CREEK
12+79.00	45.00	991935.5993	1234505.3499	SET WITH 60P NAIL
12+79.00	25.00	991938.9979	1234485.6408	SET WITH 60P NAIL
12+81.00	-59.00	991954.8861	1234403.1357	
12+81.00	-30.00	991950.1341	1234431.7437	

NOTES:

1. IF FURTHER INFORMATION REGARDING PROJECT CONTROL IS NEEDED, PLEASE CONTACT THE LOCATION AND SURVEYS UNIT.

HB-0053
R/W | 03E-1

NORTH CAROLINA DEPARTMENT OF TRANSPORTATION

PROFESSIONAL LAND SURVEYOR

NORTH CAROLINA PROFESSIONAL SEAL L-5617 LAND SURVEYOR SARAH J. VINCENT

DOCUMENT NOT CONSIDERED FINAL UNLESS ALL SIGNATURES ARE COMPLETED

2024 STANDARD SPECIFICATIONS

TIP PROJECT: HB-0053
County: Ashe

PREPARED FOR

LOCATION AND SURVEYS UNIT

PREPARED BY

wsp

GEOSPHERE LAND SURVEYING OF NC
128 TALBERT ROAD
MOORESVILLE NC 28117
FIRM C-5241

Docusign Envelope ID: 8EDAAAC6-EE60-4EEA-8BD3-E06F2E480DD2

5/26/20

CUR DATA -L-
PIc 11+20.30
Δc = 19°28'51.7" (LT)
D = 18°32'32.4"
Lc = 105.06
Tc = 53.04
R = 309
SE = SEE PLANS
DS = 20 MPH

CUR DATA -L-
PIc 13+24.96
Δc = 21°21'20.0" (LT)
D = 17°37'46.1"
Lc = 121.14
Tc = 61.28
R = 325
SE = SEE PLANS
DS = 20 MPH

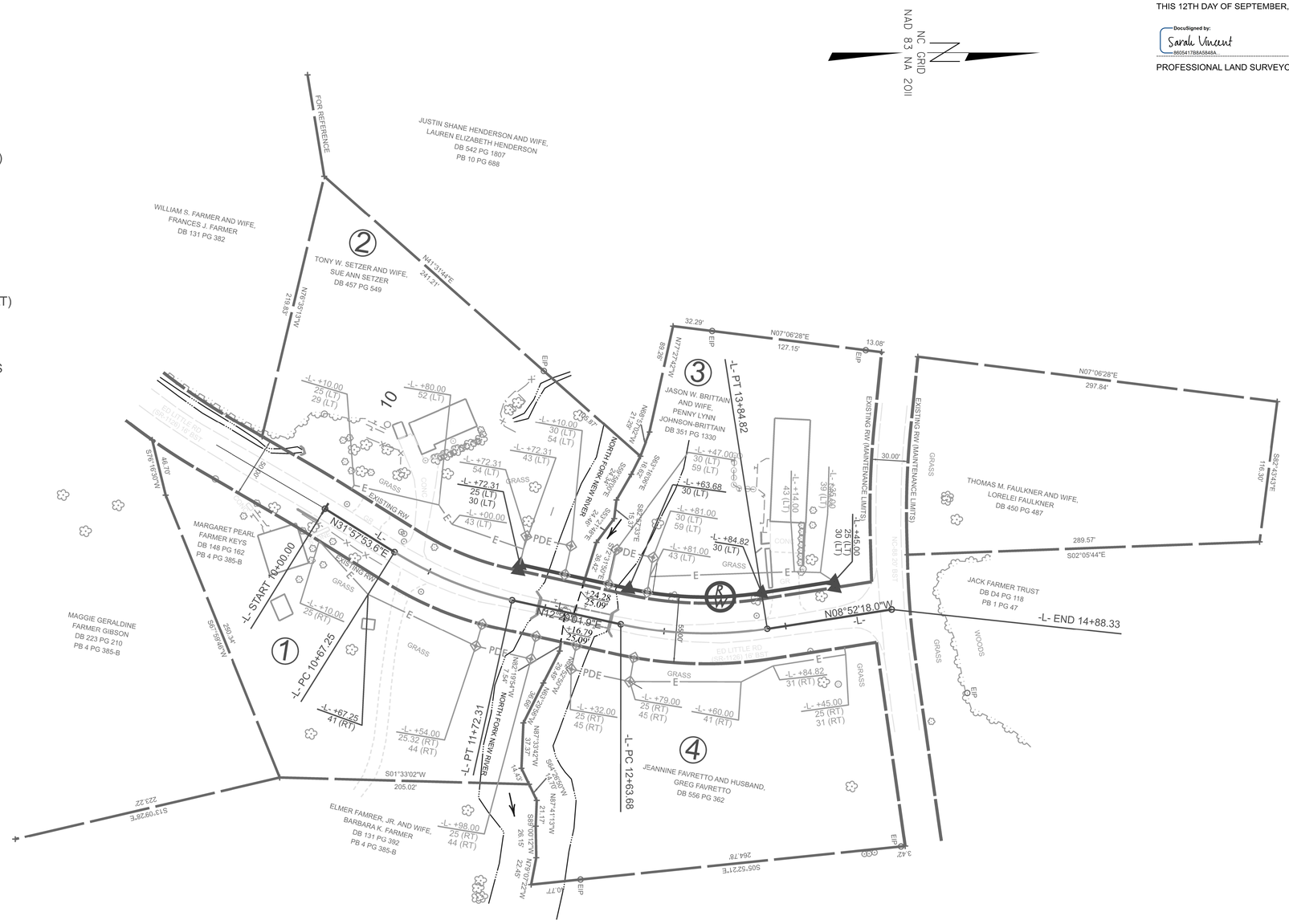

I , Sarah J. Vincent , PLS, CERTIFY THAT THE RIGHT OF WAY AND PERMANENT EASEMENT MONUMENTATION FOR THIS PROJECT SHOWN HEREIN WAS COMPLETED UNDER MY DIRECT AND RESPONSIBLE CHARGE FROM AN ACTUAL SURVEY MADE UNDER MY SUPERVISION; THAT ALL HORIZONTAL CLOSURES HAD A MINIMUM RATIO OF PRECISION OF 1:10,000 (CLASS A). FIELD WORK WAS PERFORMED FROM 8/27/2025 TO 9/9/2025, AND ALL COORDINATES ARE BASED ON NAD83/NA 2011; THAT THIS SURVEY WAS PERFORMED TO MEET THE REQUIREMENTS OF 21NCAC 56.1600 AS APPLICABLE.

THIS 12TH DAY OF SEPTEMBER, 2025.

DocuSigned by:
Sarah Vincent
8605417B8A5848A...

PROFESSIONAL LAND SURVEYOR L-5617

NOTES:

1. IF FURTHER INFORMATION REGARDING PROJECT CONTROL IS NEEDED, PLEASE CONTACT THE LOCATION AND SURVEYS UNIT.

50' 25' 0' 50' 100'

HB-0053

R/W	RW04

NORTH CAROLINA DEPARTMENT OF TRANSPORTATION

PROFESSIONAL LAND SURVEYOR

NORTH CAROLINA PROFESSIONAL SEAL L-5617 LAND SURVEYOR SARAH J. VINCENT

DOCUMENT NOT CONSIDERED FINAL UNLESS ALL SIGNATURES ARE COMPLETED

2024 STANDARD SPECIFICATIONS

TIP PROJECT: HB-0053
County: Ashe

PREPARED FOR

LOCATION AND SURVEYS UNIT

PREPARED BY

wsp

GEOSPHERE LAND SURVEYING OF NC
125 TALBERT ROAD
MOORESVILLE NC 28117
FIRM C-5241

Docusign Envelope ID: 03C4DA83-DE20-84CF-8163-03EBC9744CAC

STATE OF NORTH CAROLINA
DIVISION OF HIGHWAYS

TRANSPORTATION MANAGEMENT PLAN

ASHE COUNTY

LOCATION: *REPLACE BRIDGE NO. 040480 ON SR 1126 (ED LITTLE ROAD) OVER NORTH FORK NEW RIVER*

TYPE OF WORK: *GRADING, PAVING, STRUCTURE AND DRAINAGE*

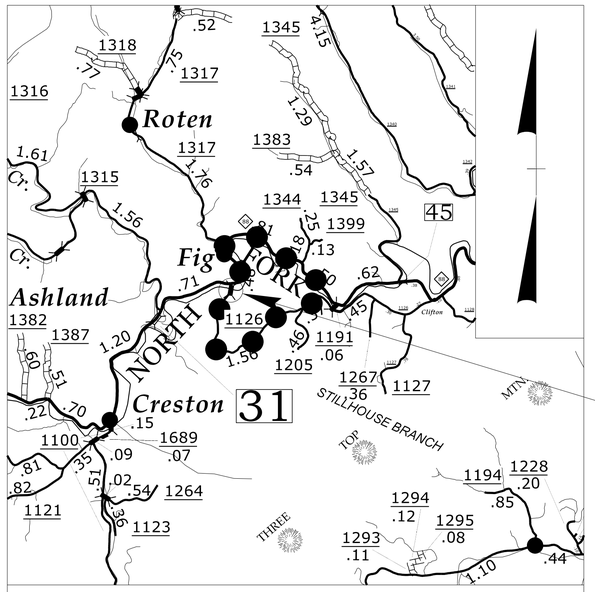

VICINITY MAP (NTS)

OFFSITE DETOUR ROUTE

INDEX OF SHEETS

SHEET NO.	TITLE
TMP-1	TITLE SHEET, VICINITY MAP, AND INDEX OF SHEETS
TMP-1A	LIST OF APPLICABLE ROADWAY STANDARD DRAWINGS, GENERAL NOTES, PHASING, AND LEGEND
TMP-2	DETOUR ROUTE
TMP-3	DETOUR SIGNING
TMP-4	SIGN DESIGN

SHEET NO.
TMP-1

HB-0053

TIP PROJECT:

WORK ZONE SAFETY & MOBILITY
"from the MOUNTAINS to the COAST"

PLANS PREPARED BY:

DAMIAN J. GEORGE, PE

CASSIDY L. MENGELKAMP, EI

NCDOT CONTACTS:

RAMIE SHAW
PROJECT ENGINEER

DIVISION OF HIGHWAYS · STATE OF NORTH CAROLINA · DEPARTMENT OF TRANSPORTATION · WORK ZONE TRAFFIC CONTROL

DOCUMENT NOT CONSIDERED FINAL UNLESS ALL SIGNATURES COMPLETED

ms consultants, inc.
5444 Wake Park Blvd.
Suite 160
Raleigh, NC 27607
NC License Number : C-3239

APPROVED: Signed by: Damian J George 6/12/2026 948E6122181342...

DATE: 6-8-2026

SEAL

NORTH CAROLINA PROFESSIONAL SEAL 061679 ENGINEER DAMIAN J. GEORGE

6/18/2026
pw://ncdot-pw.bentley.com:ncdot-pw-01/Documents/Division_11/HB-0053/Work Zone Traffic Control/HB-0053-TC-TMP-Title
User:cMengelkamp

Docusign Envelope ID: 03C4DA83-DE20-84CF-8163-03EBC9744CAC

PROJ. REFERENCE NO.	SHEET NO.
HB-0053	TMP-1A

ROADWAY STANDARD DRAWINGS

THE FOLLOWING ROADWAY STANDARDS AS SHOWN IN "ROADWAY STANDARD DRAWINGS" - N.C. DEPARTMENT OF TRANSPORTATION - RALEIGH, N.C., DATED JANUARY 2024 ARE APPLICABLE TO THIS PROJECT AND BY REFERENCE HEREBY ARE CONSIDERED A PART OF THESE PLANS:

STD. NO.	TITLE
1101.01	WORK ZONE WARNING SIGNS
1101.03	TEMPORARY ROAD CLOSURES
1101.11	TRAFFIC CONTROL DESIGN STANDARDS
1110.01	STATIONARY WORK ZONE SIGNS
1130.01	DRUMS
1135.01	CONES
1145.01	BARRICADES

GENERAL NOTES

CHANGES MAY BE REQUIRED WHEN PHYSICAL DIMENSIONS IN THE DETAIL DRAWINGS, STANDARD DETAILS, AND ROADWAY DETAILS ARE NOT ATTAINABLE TO MEET FIELD CONDITIONS OR RESULT IN DUPLICATE OR UNDESIRED OVERLAPPING OF DEVICES. MODIFICATION MAY INCLUDE: MOVING, SUPPLEMENTING, COVERING, OR REMOVAL OF DEVICES AS DIRECTED BY THE ENGINEER.

THE FOLLOWING GENERAL NOTES APPLY AT ALL TIMES FOR THE DURATION OF THE CONSTRUCTION PROJECT EXCEPT WHEN OTHERWISE NOTED IN THE PLAN OR DIRECTED BY THE ENGINEER.

TRAFFIC PATTERN ALTERATIONS

A) NOTIFY THE ENGINEER THIRTY (30) CALENDAR DAYS PRIOR TO ANY TRAFFIC PATTERN ALTERATION.

SIGNING

B) INSTALL ADVANCE WORK ZONE WARNING SIGNS WHEN WORK IS WITHIN 40 FT FROM THE EDGE OF TRAVEL LANE AND NO MORE THAN THREE (3) DAYS PRIOR TO THE BEGINNING OF CONSTRUCTION.

C) PROVIDE SIGNING AND DEVICES REQUIRED TO CLOSE THE ROAD ACCORDING TO THE ROADWAY STANDARD DRAWINGS AND TRAFFIC CONTROL PLANS.

PROVIDE SIGNING REQUIRED FOR THE OFF-SITE DETOUR ROUTE AS SHOWN IN THE TRAFFIC CONTROL PLANS.

D) COVER OR REMOVE ALL SIGNS AND DEVICES REQUIRED TO CLOSE THE ROAD WHEN ROAD CLOSURE IS NOT IN OPERATION.

COVER OR REMOVE ALL SIGNS REQUIRED FOR THE OFF-SITE DETOUR WHEN THE DETOUR IS NOT IN OPERATION.

E) ENSURE ALL NECESSARY SIGNING IS IN PLACE PRIOR TO ALTERING ANY TRAFFIC PATTERN.

TRAFFIC CONTROL DEVICES

F) PLACE TYPE III BARRICADES, WITH "ROAD CLOSED" SIGN R11-2 ATTACHED, OF SUFFICIENT LENGTH TO CLOSE ENTIRE ROADWAY.

LEGEND

GENERAL

WORK AREA

REMOVAL

TRAFFIC CONTROL DEVICES

BARRICADE (TYPE III)

CONE

DRUM SKINNY DRUM TUBULAR MARKER

TEMPORARY SIGNING

PORTABLE SIGN

STATIONARY SIGN

STATIONARY OR PORTABLE SIGN

PHASING

STEP 1 - INSTALL ADVANCE WARNING SIGNS ACCORDING TO ROADWAY STANDARD DRAWING 1101.01 (SHEET 3 OF 3).

STEP 2 - INSTALL DETOUR SIGNS AS SHOWN ON TMP-2, AND COVER.

STEP 3 - USING ROADWAY STANDARD DRAWING 1101.03 (SHEETS 1 AND 2 OF 9) , INSTALL TYPE III BARRICADES AS SHOWN ON TMP-2, UNCOVER DETOUR SIGNS, AND CLOSE ROAD -L- TO THROUGH TRAFFIC.

STEP 4 - CONSTRUCT BRIDGE, APPROACHES, AND DRIVEWAY TIE-INS (AS NEEDED). DURING CONSTRUCTION, MAINTAIN ACCESS TO EXISTING RESIDENCES ADJACENT TO THE BRIDGE.

STEP 5 - INSTALL PERMANENT PAVEMENT MARKINGS AND MARKERS.

STEP 6 - OPEN ROAD -L- TO TRAFFIC, AND REMOVE DETOUR SIGNING.

ms consultants, inc.
5444 Wake Park Blvd.
Suite 160
Raleigh, NC 27607
NC License Number : C-3239

APPROVED: Signed by: Damian J George 7/12/2026 94BE6122181342C2

DATE: 6-8-2026

SEAL

NORTH CAROLINA PROFESSIONAL SEAL 061679 ENGINEER DAMIAN J. GEORGE

DOCUMENT NOT CONSIDERED FINAL UNLESS ALL SIGNATURES COMPLETED

DIVISION OF HIGHWAYS · STATE OF NORTH CAROLINA · DEPARTMENT OF TRANSPORTATION · WORK ZONE TRAFFIC CONTROL

ROADWAY STANDARD DRAWINGS, LEGEND, GENERAL NOTES, & PHASING

6/18/2026
pw://ncdot-pw.bentley.com:ncdot-pw-01/Documents/Division_11/HB-0053/Work Zone Traffic Control/HB-0053-TC-TMP-Title-1a
User:cWengelkamp

Docusign Envelope ID: 03C4DA83-DE20-84CF-8163-03EBC9744CAC

PROJ. REFERENCE NO.	SHEET NO.
HB-0053	TMP-2

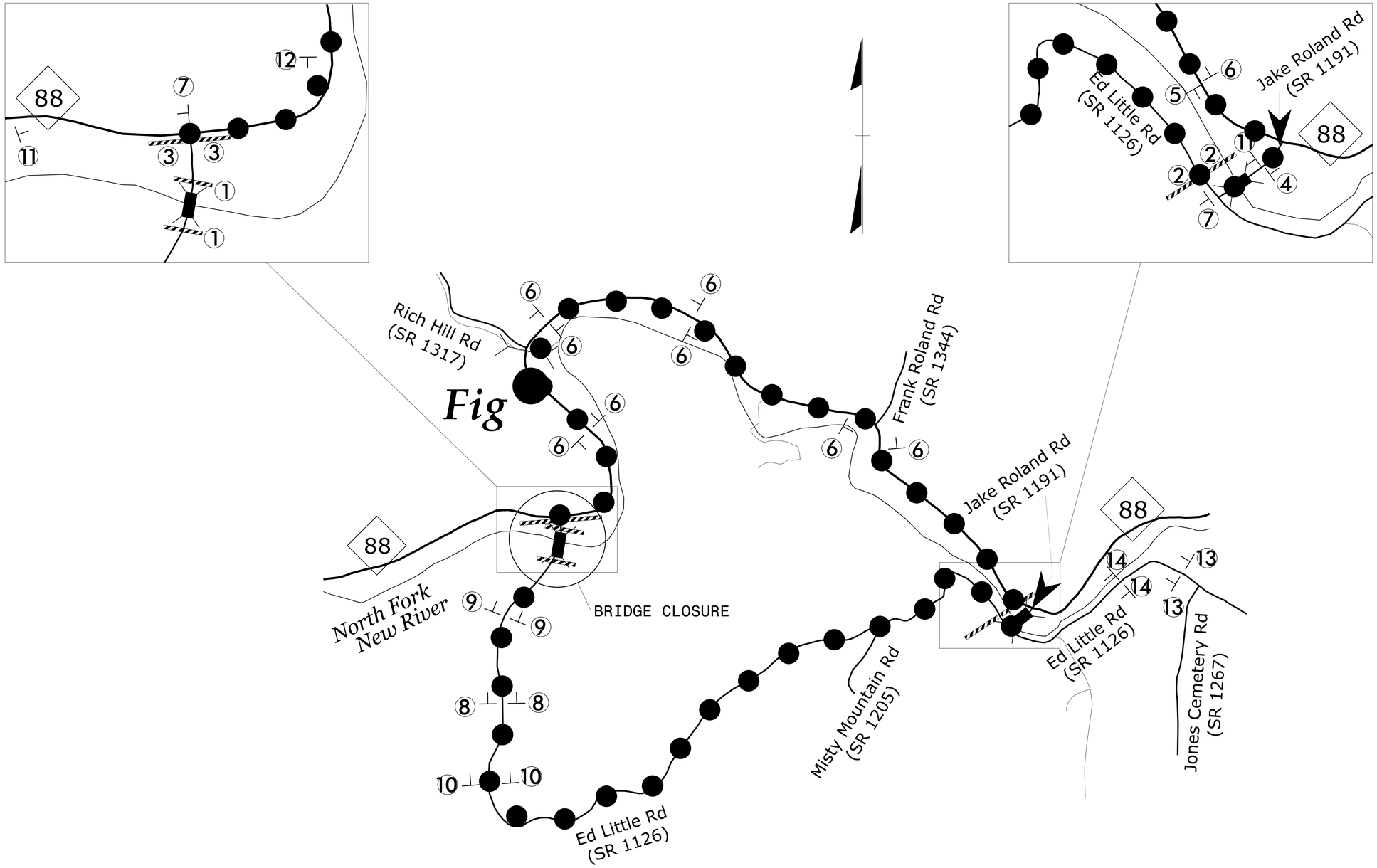

NOT TO SCALE

DETOUR ROUTE

ms consultants, inc.
5444 Wake Park Blvd.
Suite 160
Raleigh, NC 27607
NC License Number : C-3239

APPROVED: Damian J. George 7/12/2026
94BE61221813 4C2...

DATE: 6-8-2026

NORTH CAROLINA PROFESSIONAL SEAL 061679 ENGINEER DAMIAN J. GEORGE

DOCUMENT NOT CONSIDERED FINAL UNLESS ALL SIGNATURES COMPLETED

DIVISION OF HIGHWAYS · STATE OF NORTH CAROLINA · DEPARTMENT OF TRANSPORTATION · WORK ZONE TRAFFIC CONTROL

DETOUR ROUTE

6/18/2026
pw://ncdot-pw.bentley.com:ncdot-pw-01/Documents/Division_II/HB-0053/Work Zone Traffic Control/HB-0053-TC-TMP-2
User:ZCWengek.dmp

Docusign Envelope ID: 03C4DA83-DE20-84CF-8163-03EBC9744CAC

PROJ. REFERENCE NO.	SHEET NO.
HB-0053	TMP-4

SIGN NUMBER: SP
TYPE: STATIONARY
QUANTITY: SEE PLANS

SIGN WIDTH: 3′-6″
HEIGHT: 2′-6″
TOTAL AREA: 8.75 Sq.Ft.

BORDER TYPE: INSET
RECESS: 0.5″
WIDTH: 0.625″
RADII: 1.5″

NO. Z BARS:
LENGTH:

BACKG COLOR: Fluorescent Orange
COPY COLOR: Black

SYMBOL	X	Y	WID	HT

MAT′L: 0.080″ (2.0 mm) ALUMINUM

DESIGN BY: CLM
PROJECT ID: HB-0053

CHECKED BY: DJG
LOCATION:

APRIL 29, 2026
DIV: 11

USE NOTES: 1,2

1. Legend and border shall be direct applied black non-reflective sheeting.
2. Background shall be NC GRADE B fluorescent orange retroreflective sheeting.

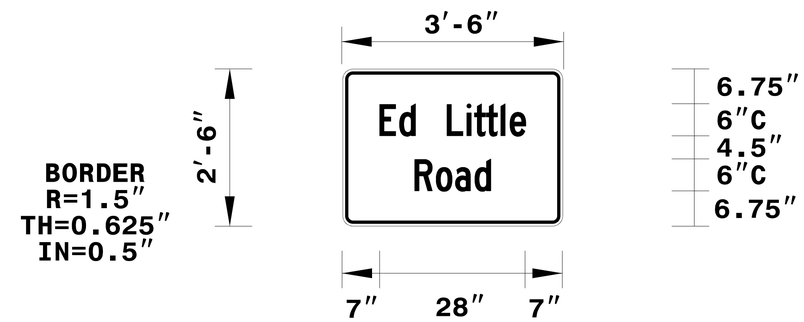

Spacing Factor is 1 unless specified otherwise

LETTER POSITIONS

Letter locations are panel edge to lower left corner

																										Series/Size Text Length
	E	d		L	i	t	t	l	e																	C 2000
	7	10.8	13.9	19.9	23.7	25.1	27.4	30.2	31.9																	28.0
	R	o	a	d																						C 2000
	13.7	17.8	21.5	25.2																						14.5

FILENAME: Work Zone_2_Ed_Little_Road

NORTH CAROLINA D.O.T. SIGN DETAIL

ms consultants, inc.
5444 Wake Park Blvd.
Suite 160
Raleigh, NC 27607
NC License Number : C-3239

APPROVED: Damian J George 6/12/2026
DATE: 6-8-2026
SEAL

NORTH CAROLINA PROFESSIONAL SEAL 061679 ENGINEER DAMIAN J. GEORGE

DOCUMENT NOT CONSIDERED FINAL UNLESS ALL SIGNATURES COMPLETED

DIVISION OF HIGHWAYS · STATE OF NORTH CAROLINA · DEPARTMENT OF TRANSPORTATION · WORK ZONE TRAFFIC CONTROL

SIGN DESIGN

6/18/2026
pw://ncdot-pw.bentley.com:ncdot-pw-01/Documents/Division_11/HB-0053/Work Zone Traffic Control/HB-0053-TC-TMP-3
User:cMengelkamp

Docusign Envelope ID: 03C4DA83-DE20-84CF-8163-03EBC9744CAC

PROJ. REFERENCE NO.	SHEET NO.
HB-0053	TMP-3

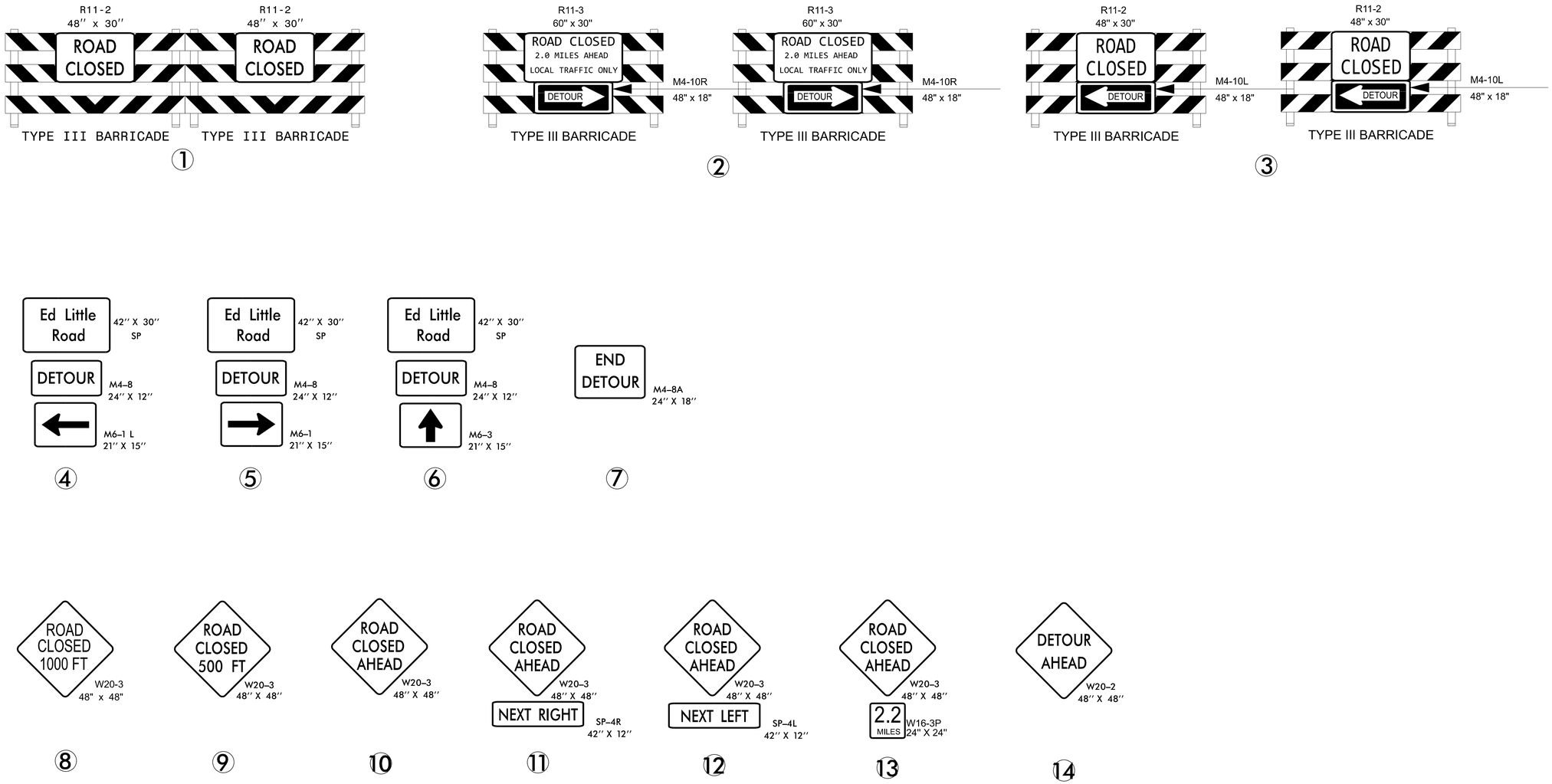

NOT TO SCALE

ms consultants, inc.
5444 Wake Park Blvd.
Suite 160
Raleigh, NC 27607
NC License Number : C-3239

APPROVED: Signed by: Damian J George 7/12/2026 94BE61221813 4C2...

DATE: 6-8-2026

SEAL

NORTH CAROLINA PROFESSIONAL SEAL 061679 ENGINEER DAMIAN J. GEORGE

DOCUMENT NOT CONSIDERED FINAL UNLESS ALL SIGNATURES COMPLETED

DIVISION OF HIGHWAYS · STATE OF NORTH CAROLINA · DEPARTMENT OF TRANSPORTATION · WORK ZONE TRAFFIC CONTROL

DETOUR SIGNS

6/18/2026
pw://ncdot-pw.bentley.com:ncdot-pw-01/Documents/Division_II/HB-0053/Work Zone Traffic Control/HB-0053-TC-TMP-4
User:EMengelkamp

TIP PROJECT: HB-0053

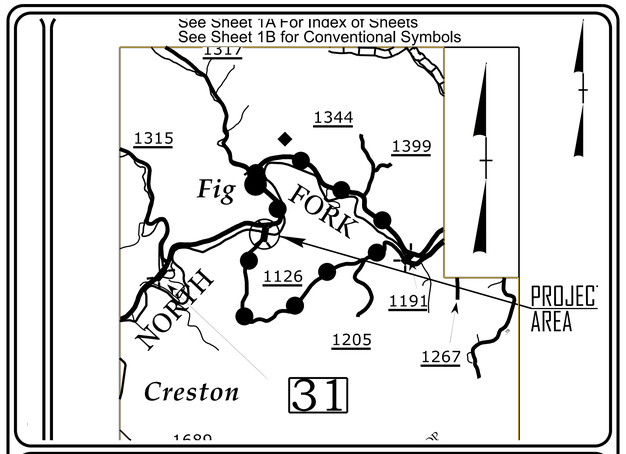

VICINITY MAP
NOT TO SCALE

STATE OF NORTH CAROLINA
DIVISION OF HIGHWAYS

PLAN FOR PROPOSED
HIGHWAY EROSION CONTROL

ASHE COUNTY

LOCATION: *REPLACE BRIDGE NO. 040480 ON SR 1126 (ED LITTLE ROAD) OVER NORTH FORK NEW RIVER*

TYPE OF WORK: *GRADING, PAVING, STRUCTURE AND DRAINAGE*

STATE	STATE PROJECT REFERENCE NO.	SHEET NO.	TOTAL SHEETS
N.C.	HB-0053	EC-1	

STATE PROJ. NO.	F.A. PROJ. NO.	DESCRIPTION

THIS PROJECT CONTAINS EROSION CONTROL PLANS FOR CLEARING AND GRUBBING PHASE OF CONSTRUCTION.

NAD 83/NA 2011

4

BEGIN PROJECT HB-0053
-L- STA 10+10.00

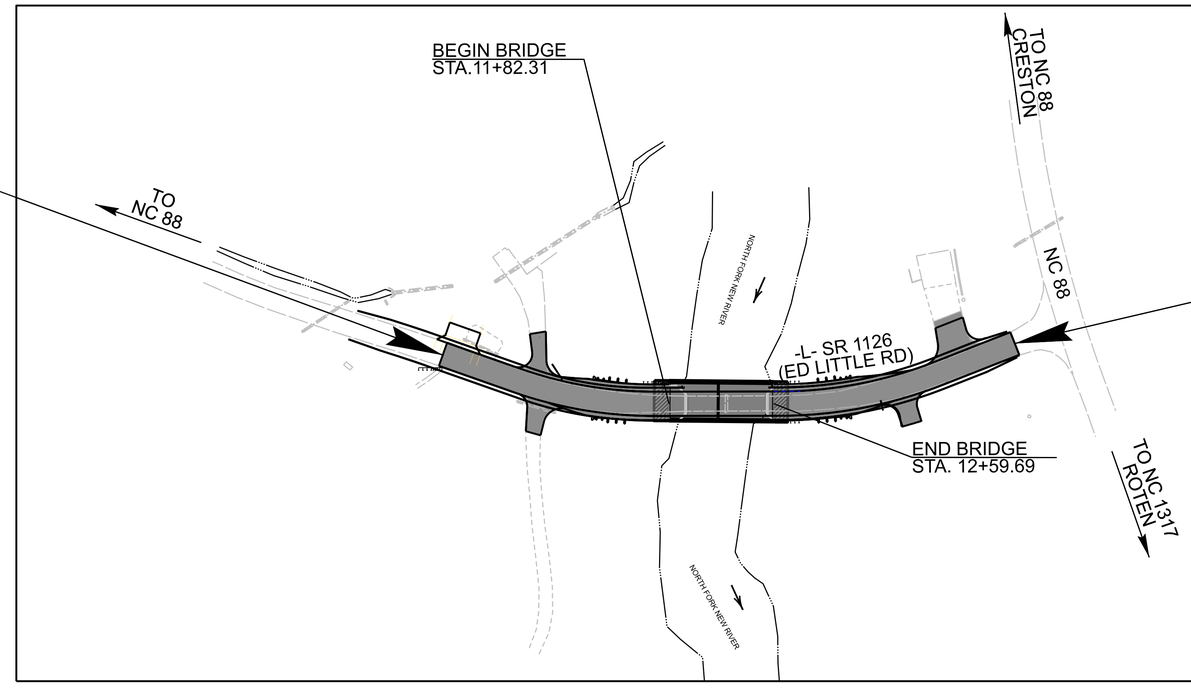

END PROJECT HB-0053
-L- STA 14+45.00

ENVIRONMENTALLY SENSITIVE AREA(S) EXIST ON THIS PROJECT

Refer To E. C. Special Provisions for Special Considerations.

THIS PROJECT HAS BEEN DESIGNED TO SENSITIVE WATERSHED STANDARDS.

HIGH QUALITY WATER(S) EXIST ON THIS PROJECT

High Quality Water Zone(s) Exist
From Sta. -L- 11+86.00
to Sta. -L- 12+61.00
Refer To E. C. Special Provisions for Special Considerations.

GRAPHIC SCALE

30 15 0 30 60
PLANS

THESE EROSION AND SEDIMENT CONTROL PLANS COMPLY WITH THE REGULATIONS SET FORTH BY THE NCG 010000 GENERAL STORMWATER CONSTRUCTION PERMIT ISSUED BY THE NORTH CAROLINA DEPARTMENT OF ENVIRONMENTAL QUALITY DIVISION OF ENERGY, MINERAL, AND LAND RESOURCES.

LEVEL III CERTIFIED BY:
KAREN HEFNER, PE
CERTIFICATION NUMBER: 3824

Prepared in the Office of:

MI ENGINEERING, PLLC
1011 SCHAUB DR, SUITE 100
RALEIGH, NC 27606
(919) 851-6606
FIRM PE NUMBER: P-0671

Designed by:

KAREN HEFNER, PE — *3824*
NAME — *LEVEL III CERTIFICATION NO.*

Roadway Standard Drawings

The "Roadway Standard Drawings"- Roadway Design Unit - N. C. Department of Transportation - Raleigh, N. C., dated January 2024 and the latest revision thereto are applicable to this project and by reference hereby are considered a part of these plans.

5/20/2026
$FILE1$
$USERNAME1$

PROJECT REFERENCE NO.	SHEET NO.
HB-0053	EC-02

DIVISION OF HIGHWAYS
STATE OF NORTH CAROLINA

EROSION & SEDIMENT CONTROL LEGEND

Std. #	Description	Symbol
1605.01	Temporary Silt Fence	
1606.01	Special Sediment Control Fence	
1622.01	Temporary Berms and Slope Drains	
1630.02	Silt Basin Type B	
1630.03	Temporary Silt Ditch	TSD
1630.04	Stilling Basin	
1630.05	Temporary Diversion	TD
1630.06	Special Stilling Basin	
1630.07	Skimmer Basin	
1630.08	Tiered Skimmer Basin	
1630.09	Earthen Dam with Skimmer	
	Infiltration Basin	
	Rock Inlet Sediment Trap:	
1632.01	Type A	A
1632.02	Type B	B
1632.03	Type C	C

Std. #	Description	Symbol
1633.01	Temporary Rock Silt Check Type A	
1633.02	Temporary Rock Silt Check Type B	
1633.03	Temporary Rock Silt Check Type A with Excelsior Matting and Flocculant	
1634.01	Temporary Rock Sediment Dam Type A	
1634.02	Temporary Rock Sediment Dam Type B	
1635.01	Rock Pipe Inlet Sediment Trap Type A	A
1635.02	Rock Pipe Inlet Sediment Trap Type B	B
1636.01	Excelsior Wattle Check	
1636.01	Excelsior Wattle Check with Flocculant	
1636.01	Coir Fiber Wattle Check	
1636.01	Coir Fiber Wattle Check with Flocculant	
1636.02	Silt Fence Excelsior Wattle Break	EW
	Silt Fence Coir Fiber Wattle Break	CFW
1636.03	Excelsior Wattle Barrier	—EW—EW—EW—
1636.03	Coir Fiber Wattle Barrier	—CFW—CFW—CFW—

5/20/2026
$$TIME$$
$$USERNAME$$

PROJECT REFERENCE NO.	SHEET NO.
HB-0053	EC-02A

ONSITE CONCRETE WASHOUT STRUCTURE WITH LINER

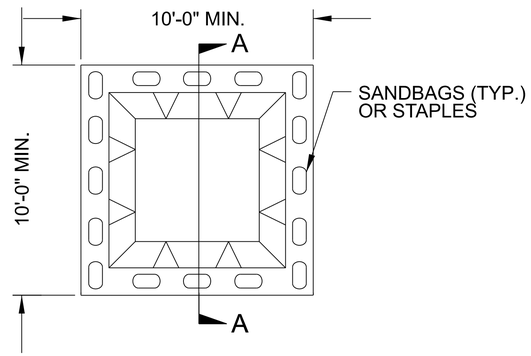

PLAN

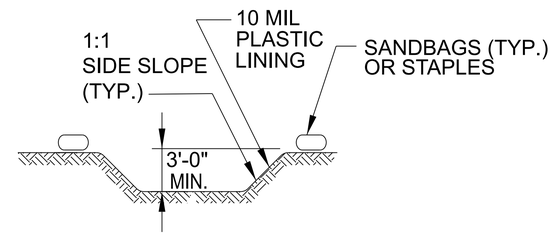

SECTION A-A

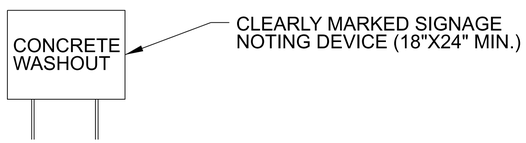

NOTES:
1. ACTUAL LOCATION DETERMINED IN FIELD

2. THE CONCRETE WASHOUT STRUCTURES SHALL BE MAINTAINED WHEN THE LIQUID AND/OR SOLID REACHES 75% OF THE STRUCTURES CAPACITY TO PROVIDE ADEQUATE HOLDING CAPACITY WITH A MINIMUM 12 INCHES OF FREEBOARD.

3.CONCRETE WASHOUT STRUCTURE NEEDS TO BE CLEARLY MARKED WITH SIGNAGE NOTING DEVICE.

BELOW GRADE WASHOUT STRUCTURE

NOT TO SCALE

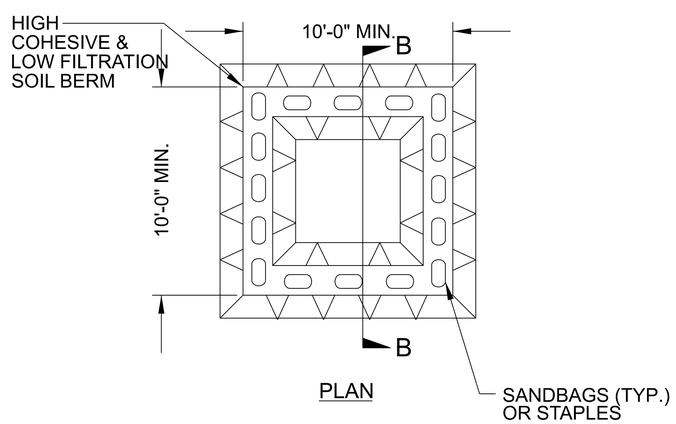

PLAN

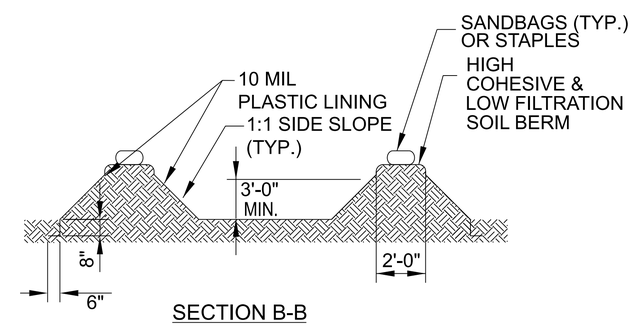

SECTION B-B

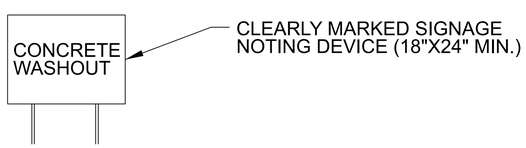

NOTES:
1. ACTUAL LOCATION DETERMINED IN FIELD

2. THE CONCRETE WASHOUT STRUCTURES SHALL BE MAINTAINED WHEN THE LIQUID AND/OR SOLID REACHES 75% OF THE STRUCTURES CAPACITY TO PROVIDE ADEQUATE HOLDING CAPACITY WITH A MINIMUM 12 INCHES OF FREEBOARD.

3.CONCRETE WASHOUT STRUCTURE NEEDS TO BE CLEARLY MARKED WITH SIGNAGE NOTING DEVICE.

ABOVE GRADE WASHOUT STRUCTURE

NOT TO SCALE

5/20/2026
$FILEL$
$(USERNAME)$

PROJECT REFERENCE NO.	SHEET NO.
HB-0053	EC-3

DIVISION OF HIGHWAYS
STATE OF NORTH CAROLINA

SOIL STABILIZATION SUMMARY SHEET

DITCH MATTING (STRAW) FOR EROSION CONTROL

CONST SHEET NO.	LINE	FROM STATION	TO STATION	SIDE	ESTIMATE (SY)
4	-L-	10+52	10+64	LT	15
4	-L-	11+00	11+91	LT	95
4	-L-	14+25	14+45	LT	20
4	-L-	10+50	10+72	RT	20
		SUBTOTAL, DITCH (STRAW)			150

DITCH MATTING (EXCELSIOR) FOR EROSION CONTROL

CONST SHEET NO.	LINE	FROM STATION	TO STATION	SIDE	ESTIMATE (SY)
4	-L-	12+57	12+80	LT	15
		SUBTOTAL, DITCH (EXCELSIOR)			15
		SUBTOTAL, DITCH (EXCELSIOR)			15
		SUBTOTAL, DITCH (STRAW)			150
		SUBTOTAL, DITCHES			165
	MISCELLANEOUS MATTING TO BE INSTALLED AS DIRECTED BY THE ENGINEER				8,825
				TOTAL	8,890
				SAY	9,000

MATTING FOR EROSION CONTROL

CONST SHEET NO.	LINE	FROM STATION	TO STATION	SIDE	ESTIMATE (SY)

5/20/2026
$FILEL$
$(USERNAME)$

PROJECT REFERENCE NO.	SHEET NO.
HB-0053	EC-3A

DIVISION OF HIGHWAYS
STATE OF NORTH CAROLINA

SOIL STABILIZATION TIMEFRAMES

SITE DESCRIPTION	STABILIZATION TIME	TIMEFRAME EXCEPTIONS
PERIMETER DIKES, SWALES, DITCHES AND SLOPES	7 DAYS	NONE
HIGH QUALITY WATER (HQW) ZONES	7 DAYS	NONE
SLOPES STEEPER THAN 3:1	7 DAYS	IF SLOPES ARE 10' OR LESS IN LENGTH AND ARE NOT STEEPER THAN 2:1, 14 DAYS ARE ALLOWED.
SLOPES 3:1 TO 4:1	14 DAYS	7 DAYS FOR SLOPES GREATER THAN 50' IN LENGTH WITH SLOPES STEEPER THAN 4:1. 7 DAYS FOR PERIMETER DIKES, SWALES, DITCHES PERIMETER SLOPES, AND HQW ZONES
ALL OTHER AREAS WITH SLOPES FLATTER THAN 4:1	14 DAYS	7 DAYS FOR PERIMETER DIKES, SWALES, DITCHES PERIMETER SLOPES, AND HQW ZONES

5/20/2026
$FILEL$
$(USERNAME)$

11/14/23

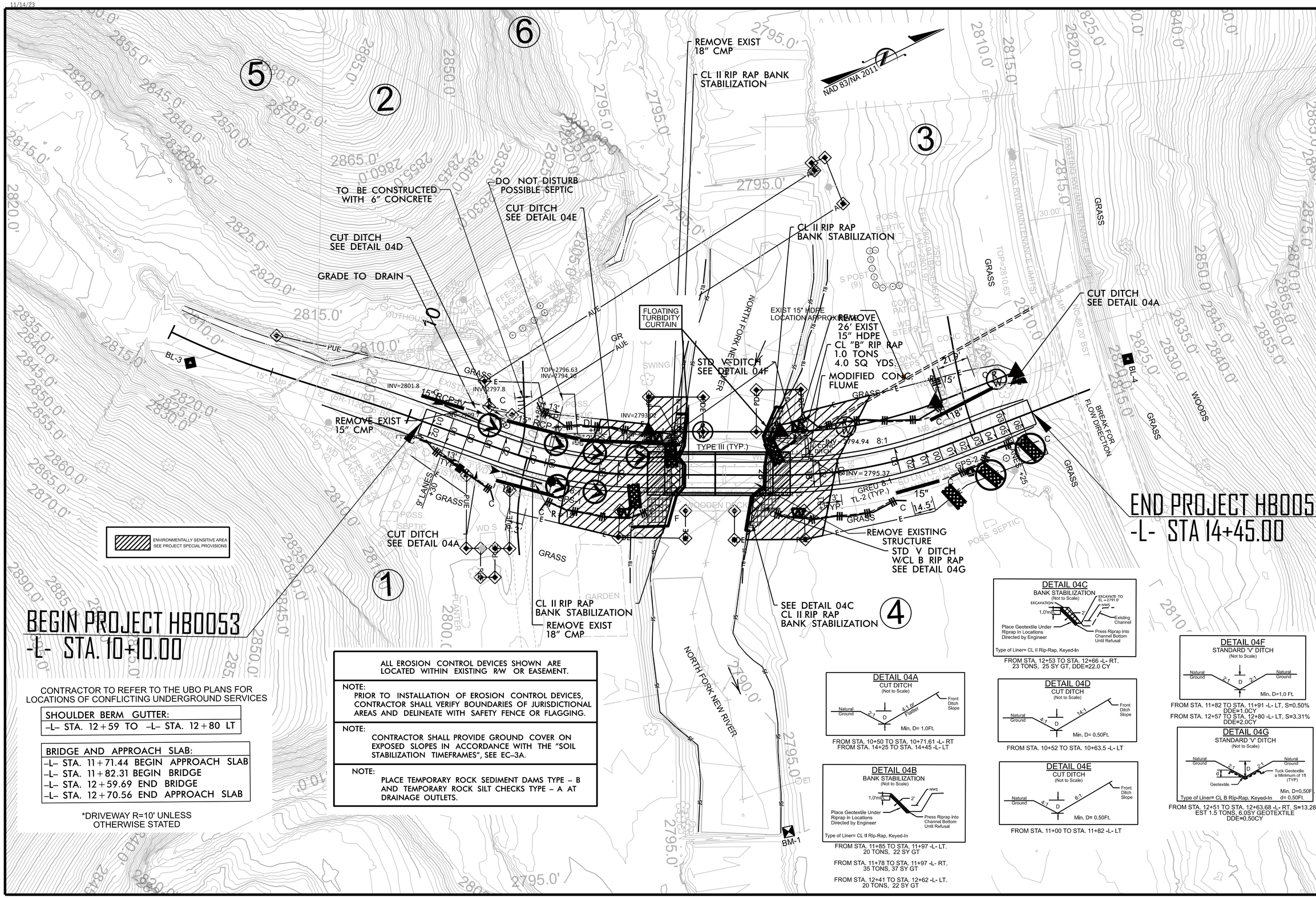

CONTRACTOR TO REFER TO THE UBO PLANS FOR LOCATIONS OF CONFLICTING UNDERGROUND SERVICES

SHOULDER BERM GUTTER:
–L– STA. 12+59 TO –L– STA. 12+80 LT

BRIDGE AND APPROACH SLAB:
–L– STA. 11+71.44 BEGIN APPROACH SLAB
–L– STA. 11+82.31 BEGIN BRIDGE
–L– STA. 12+59.69 END BRIDGE
–L– STA. 12+70.56 END APPROACH SLAB

*DRIVEWAY R=10' UNLESS OTHERWISE STATED

ALL EROSION CONTROL DEVICES SHOWN ARE LOCATED WITHIN EXISTING R/W OR EASEMENT.

NOTE:
PRIOR TO INSTALLATION OF EROSION CONTROL DEVICES, CONTRACTOR SHALL VERIFY BOUNDARIES OF JURISDICTIONAL AREAS AND DELINEATE WITH SAFETY FENCE OR FLAGGING.

NOTE:
CONTRACTOR SHALL PROVIDE GROUND COVER ON EXPOSED SLOPES IN ACCORDANCE WITH THE "SOIL STABILIZATION TIMEFRAMES", SEE EC–3A.

NOTE:
PLACE TEMPORARY ROCK SEDIMENT DAMS TYPE – B AND TEMPORARY ROCK SILT CHECKS TYPE – A AT DRAINAGE OUTLETS.

DETAIL 04A
CUT DITCH
(Not to Scale)

FROM STA. 10+50 TO STA. 10+71.61 -L- RT
FROM STA. 14+25 TO STA. 14+45 -L- LT

DETAIL 04B
BANK STABILIZATION
(Not to Scale)

FROM STA. 11+85 TO STA. 11+97 -L- LT.
20 TONS, 22 SY GT

FROM STA. 11+78 TO STA. 11+97 -L- RT.
35 TONS, 37 SY GT

FROM STA. 12+41 TO STA. 12+62 -L- LT.
20 TONS, 22 SY GT

DETAIL 04C
BANK STABILIZATION
(Not to Scale)

FROM STA. 12+53 TO STA. 12+66 -L- RT.
23 TONS, 25 SY GT, DDE=22.0 CY

DETAIL 04D
CUT DITCH
(Not to Scale)

FROM STA. 10+52 TO STA. 10+63.5 -L- LT

DETAIL 04E
CUT DITCH
(Not to Scale)

FROM STA. 11+00 TO STA. 11+82 -L- LT

DETAIL 04F
STANDARD 'V' DITCH
(Not to Scale)

FROM STA. 11+82 TO STA. 11+91 -L- LT, S=0.50%
DDE=1.0CY
FROM STA. 12+57 TO STA. 12+80 -L- LT, S=3.31%
DDE=2.0CY

DETAIL 04G
STANDARD 'V' DITCH
(Not to Scale)

FROM STA. 12+51 TO STA. 12+63.68 -L- RT, S=13.28%
EST 1.5 TONS, 6.0SY GEOTEXTILE
DDE=0.50CY

REVISIONS

HB-0053

EC-04	CONST.04

NORTH CAROLINA
DEPARTMENT OF TRANSPORTATION
ASHE COUNTY

ROADSIDE ENVIRONMENTAL UNIT

HYDRAULICS ENGINEER

PREPARED BY

MR ENGINEERING
1015 SCHAUB DRIVE, SUITE 100
RALEIGH, NC 27610
(919) 851-6500
FIRM PE NUMBER: C-0671

CLEARING & GRUBBING
EROSION CONTROL FOR CONSTRUCTION SHEET 04

11/14/23

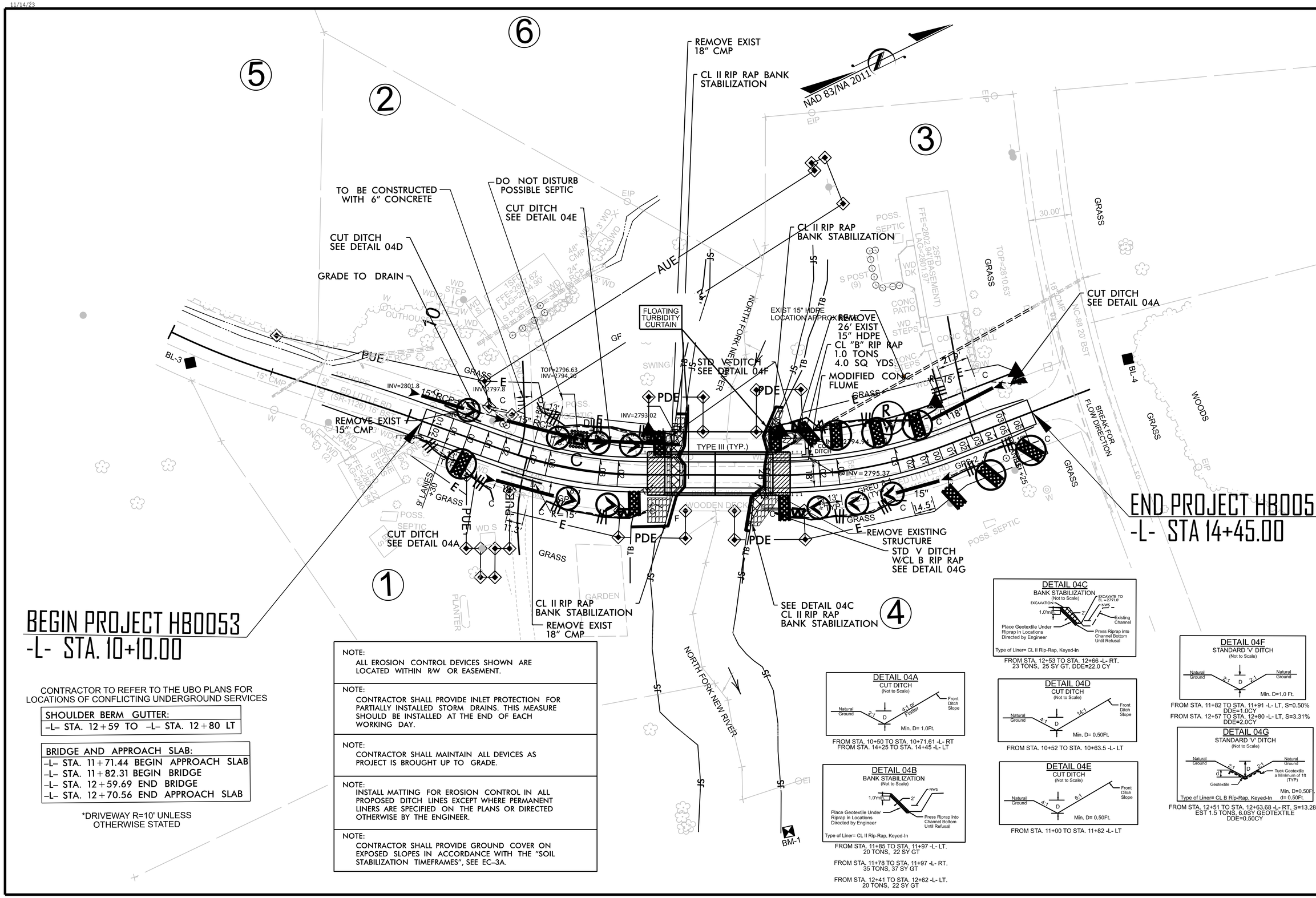

CONTRACTOR TO REFER TO THE UBO PLANS FOR LOCATIONS OF CONFLICTING UNDERGROUND SERVICES

SHOULDER BERM GUTTER:
–L– STA. 12+59 TO –L– STA. 12+80 LT

BRIDGE AND APPROACH SLAB:
–L– STA. 11+71.44 BEGIN APPROACH SLAB
–L– STA. 11+82.31 BEGIN BRIDGE
–L– STA. 12+59.69 END BRIDGE
–L– STA. 12+70.56 END APPROACH SLAB

*DRIVEWAY R=10' UNLESS OTHERWISE STATED

NOTE:
ALL EROSION CONTROL DEVICES SHOWN ARE LOCATED WITHIN R/W OR EASEMENT.

NOTE:
CONTRACTOR SHALL PROVIDE INLET PROTECTION FOR PARTIALLY INSTALLED STORM DRAINS. THIS MEASURE SHOULD BE INSTALLED AT THE END OF EACH WORKING DAY.

NOTE:
CONTRACTOR SHALL MAINTAIN ALL DEVICES AS PROJECT IS BROUGHT UP TO GRADE.

NOTE:
INSTALL MATTING FOR EROSION CONTROL IN ALL PROPOSED DITCH LINES EXCEPT WHERE PERMANENT LINERS ARE SPECIFIED ON THE PLANS OR DIRECTED OTHERWISE BY THE ENGINEER.

NOTE:
CONTRACTOR SHALL PROVIDE GROUND COVER ON EXPOSED SLOPES IN ACCORDANCE WITH THE "SOIL STABILIZATION TIMEFRAMES", SEE EC–3A.

DETAIL 04A
CUT DITCH
(Not to Scale)
Natural Ground, 2:1, D, 4:1 or Flatter, Front Ditch Slope
Min. D= 1.0Ft.
FROM STA. 10+50 TO STA. 10+71.61 -L- RT
FROM STA. 14+25 TO STA. 14+45 -L- LT

DETAIL 04B
BANK STABILIZATION
(Not to Scale)
1.0'min, 2', NWS
Place Geotextile Under Riprap in Locations Directed by Engineer
Press Riprap into Channel Bottom Until Refusal
Type of Liner= CL II Rip-Rap, Keyed-In
FROM STA. 11+85 TO STA. 11+97 -L- LT. 20 TONS, 22 SY GT
FROM STA. 11+78 TO STA. 11+97 -L- RT. 35 TONS, 37 SY GT
FROM STA. 12+41 TO STA. 12+62 -L- LT. 20 TONS, 22 SY GT

DETAIL 04C
BANK STABILIZATION
(Not to Scale)
EXCAVATE TO EL =2791.0'
EXCAVATION, 1.0'min, 2', NWS, Existing Channel
Place Geotextile Under Riprap in Locations Directed by Engineer
Press Riprap into Channel Bottom Until Refusal
Type of Liner= CL II Rip-Rap, Keyed-In
FROM STA. 12+53 TO STA. 12+66 -L- RT. 23 TONS, 25 SY GT, DDE=22.0 CY

DETAIL 04D
CUT DITCH
(Not to Scale)
Natural Ground, 4:1, D, 14:1, Front Ditch Slope
Min. D= 0.50Ft.
FROM STA. 10+52 TO STA. 10+63.5 -L- LT

DETAIL 04E
CUT DITCH
(Not to Scale)
Natural Ground, 4:1, D, 6:1, Front Ditch Slope
Min. D= 0.50Ft.
FROM STA. 11+00 TO STA. 11+82 -L- LT

DETAIL 04F
STANDARD 'V' DITCH
(Not to Scale)
Natural Ground, 2:1, D, 2:1, Natural Ground
Min. D=1.0 Ft.
FROM STA. 11+82 TO STA. 11+91 -L- LT, S=0.50% DDE=1.0CY
FROM STA. 12+57 TO STA. 12+80 -L- LT, S=3.31% DDE=2.0CY

DETAIL 04G
STANDARD 'V' DITCH
(Not to Scale)
Natural Ground, 2:1, d, D, 2:1, Natural Ground, Tuck Geotextile a Minimum of 1ft (TYP), Geotextile
Min. D=0.50Ft. d= 0.50Ft.
Type of Liner= CL B Rip-Rap, Keyed-In
FROM STA. 12+51 TO STA. 12+63.68 -L- RT, S=13.28% EST 1.5 TONS, 6.0SY GEOTEXTILE DDE=0.50CY

REVISIONS

HB-0053
EC-05 | CONST.04

NORTH CAROLINA DEPARTMENT OF TRANSPORTATION
ASHE COUNTY

ROADSIDE ENVIRONMENTAL UNIT

HYDRAULICS ENGINEER

PREPARED BY

MK ENGINEERING
1015 SCHAUB DRIVE, SUITE 100
RALEIGH, NC 27609
(919) 851-6500
FIRM PE NUMBER | P-0571

FINAL GRADE
EROSION CONTROL FOR CONSTRUCTION SHEET 04

Docusign Envelope ID: 03C4DA83-DE20-84CF-8163-03EBC9744CAC

TIP NO.	SHEET NO.
HB-0053	PMP-1

APPROVED: Damian J. George 6/22/2026
DATE: 6-24-2026

SEAL

NORTH CAROLINA PROFESSIONAL SEAL 061679 ENGINEER DAMIAN J. GEORGE

DOCUMENT NOT CONSIDERED FINAL UNLESS ALL SIGNATURES COMPLETED

STATE OF NORTH CAROLINA
DEPARTMENT OF TRANSPORTATION

PAVEMENT MARKING AND SIGNING PLAN
ASHE COUNTY

LOCATION: REPLACE BRIDGE NO. 040480 ON SR 1126 (ED LITTLE ROAD) OVER NORTH FORK NEW RIVER

T.I.P.: HB-0053

CONTRACT: DK00842

INDEX

SHEET NO.	DESCRIPTION
PMP-1	PAVEMENT MARKING AND SIGNING PLAN TITLE AND SCHEDULE SHEET
PMP-2	FINAL PAVEMENT MARKING AND SIGNING

ROADWAY STANDARD DRAWING

THE FOLLOWING ROADWAY STANDARDS AS APPEAR IN "ROADWAY STANDARD DRAWINGS" - CONTRACT STANDARDS AND DEVELOPMENT UNIT - N.C. DEPARTMENT OF TRANSPORTATION - RALEIGH, N.C., DATED JANUARY 2024 ARE APPLICABLE TO THIS PROJECT AND BY REFERENCE HEREBY ARE CONSIDERED A PART OF THESE PLANS:

STD. NO.	TITLE
1205.01	PAVEMENT MARKINGS - LINE TYPES AND OFFSETS
1205.02	PAVEMENT MARKINGS - TWO-LANE AND MULTILANE ROADWAYS
1205.04	PAVEMENT MARKINGS - INTERSECTIONS
1205.12	PAVEMENT MARKINGS - BRIDGES
1261.01	GUARDRAIL AND BARRIER DELINEATORS - INSTALLATION SPACING
1261.02	GUARDRAIL AND BARRIER DELINEATORS - TYPES AND MOUNTING
1262.01	GUARDRAIL END DELINEATION

PAVEMENT MARKING SCHEDULE

	PAINT(4")
P1	WHITE EDGELINE
P13	YELLOW DOUBLE CENTER

SUMMARY OF QUANTITIES

ITEM NO.		ITEM DESCRIPTION	QUANTITY	UNIT
DESC. NO.	SECT. NO.			
4155000000	907	DISPOSAL OF SIGN SYSTEM, U-CHANNEL	8	EA.

GENERAL NOTES

THE FOLLOWING GENERAL NOTES APPLY AT ALL TIMES FOR THE DURATION OF THE CONSTRUCTION PROJECT, EXCEPT WHEN OTHERWISE NOTED IN THE PLAN, OR DIRECTED BY THE ENGINEER.

A) INSTALL PAVEMENT MARKINGS AND PAVEMENT MARKERS ON THE FINAL SURFACE AS FOLLOWS:

ROAD NAME	MARKING	MARKER
SR 1126	PAINT	NONE

B) TIE PROPOSED PAVEMENT MARKING LINES TO EXISTING PAVEMENT MARKING LINES.

C) REMOVE/REPLACE ANY CONFLICTING/DAMAGED PAVEMENT MARKINGS AND MARKERS.

D) PASSING ZONES WILL BE DETERMINED IN THE FIELD AND MUST BE APPROVED BY THE ENGINEER.

E) PLACE TWO APPLICATIONS OF PAINT PAVEMENT MARKINGS ON THE FINAL WEARING SURFACE. PLACE THE SECOND APPLICATION OF PAINT UPON SUFFICIENT DRYING TIME OF THE FIRST.

- IF REMOVAL OR RELOCATION OF SIGNS ON PRIVATE STREET (NON-STATE MAINTAINED) IS REQUIRED DUE TO CONSTRUCTION, THE CONTRACTOR SHALL INFORM THE ENGINEER. THE WORK WILL BE COMPLETED BY OTHERS.
- ALL EXISTING SIGNS ON "U" CHANNEL POST WITHIN THE PROJECT LIMITS SHALL BE REMOVED AND DISPOSED OF UNLESS OTHERWISE NOTED ON PLANS.
- SEE ROADWAY PLANS FOR GUARD/GUIDE RAIL DETAILS.

PROJECT NOTES

1 DISPOSAL OF SIGN SYSTEM, U CHANNEL

PLAN SUBMITTED TO:

Ramie Shaw NCDOT Project Engineer

STATE OF NORTH CAROLINA DEPARTMENT OF TRANSPORTATION

PLAN PREPARED BY: ms consultants, inc.

Damian J. George, PE Project Engineer
Cassidy L. Mengelkamp, EI Project Design Engineer

ms consultants, inc.
5444 Wake Park Blvd.
Suite 160
Raleigh, NC 27607
NC License Number : C-3239

6/25/2026
pw://ncdot-pw.bentley.com:ncdot-pw-01/Documents/Division.11/HB-0053/Signing and Delineation/Pavement Marking/Design/HB-0053_SGN_PMP_Title
User:CMengelkamp

Docusign Envelope ID: 03C4DA83-DE20-84CF-8163-03EBC9744CAC

TIP NO.	SHEET NO.
HB-0053	PMP-2

APPROVED: Damian J George 2026
DATE: 6-24-2026

SEAL

NORTH CAROLINA PROFESSIONAL SEAL 061679 ENGINEER DAMIAN J. GEORGE

DOCUMENT NOT CONSIDERED FINAL UNLESS ALL SIGNATURES COMPLETED

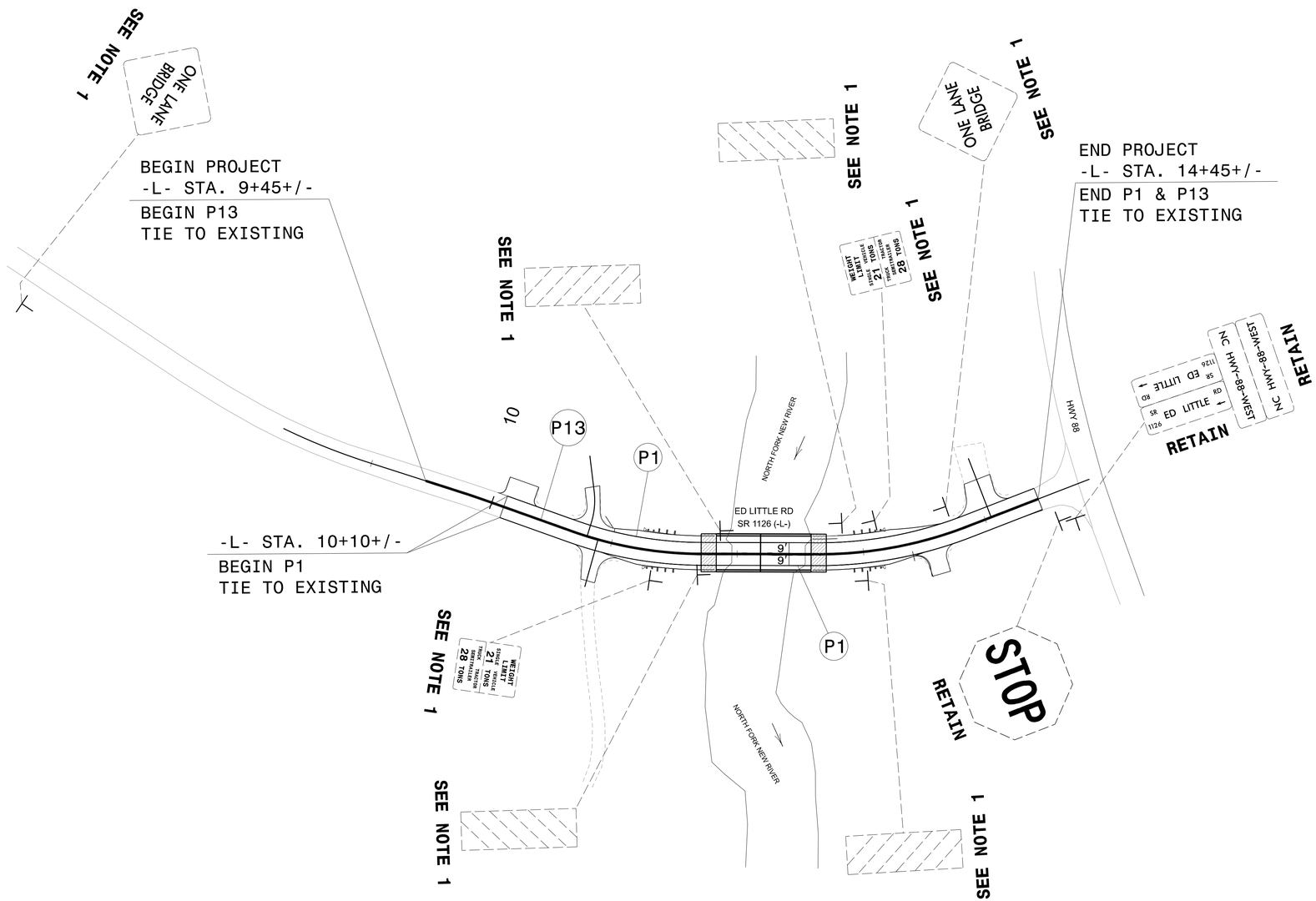

ms consultants, inc.
5444 Wake Park Blvd.
Suite 160
Raleigh, NC 27607
NC License Number : C-3239

FINAL PAVEMENT MARKINGS & SIGNING

6/25/2026
P:\\ncdot.pw.bentley.com:ncdot-pw-01\Documents\Division_11\HB-0053\Signing and Delineation\Pavement Marking\Design\HB-0053_SGN_PMP_2
User:CMengelkamp

09/08/99

TIP PROJECT: HB-0053

CONTRACT: _____

STATE OF NORTH CAROLINA
DIVISION OF HIGHWAYS

ASHE COUNTY

T.I.P. NO.	SHEET NO.
HB–0053	UO–1

NOTE:
ALL UTILITY WORK SHOWN ON THIS SHEET WILL BE DONE BY OTHERS. NO PAYMENT WILL BE MADE TO THE CONTRACTOR FOR UTILITY WORK SHOWN ON THIS SHEET.

LOCATION: *REPLACE BRIDGE NO. 040480 ON SR 1126 (ED LITTLE ROAD) OVER NORTH FORK NEW RIVER*

TYPE OF WORK: *UTILITY RELOCATION*

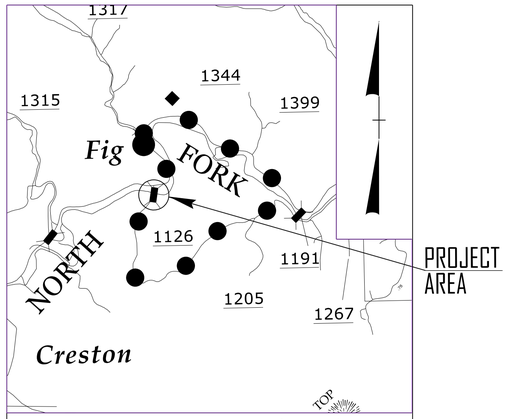

VICINITY MAP (NTS)
OFFSITE DETOUR ROUTE

BEGIN PROJECT HB-0053
-L- STA 10+00.00

END PROJECT HB-0053
-L- STA 14+45.00

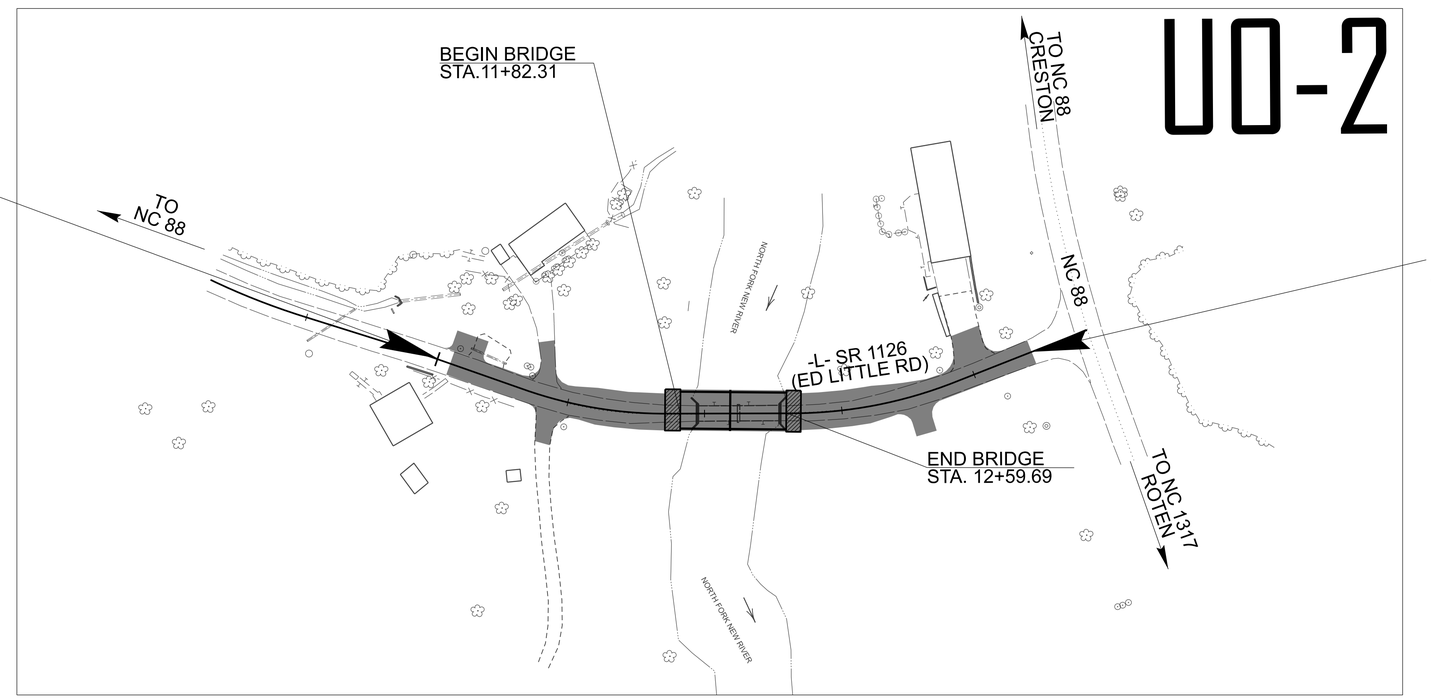

NAD 83/NA 2011

GRAPHIC SCALES

30 15 0 30 60
PLANS

30 15 0 30 60
PROFILE (HORIZONTAL)

6 3 0 6 12
PROFILE (VERTICAL)

INDEX OF SHEETS

SHEET NO.:	DESCRIPTION:
UO–1	TITLE SHEET
UO–2	UBO PLAN SHEET

UTILITY OWNERS WITH CONFLICTS

(A) POWER – BLUE RIDGE ENERGY EMC
(B) TELEPHONE – SKYLINE MEMBERSHIP CORP.

PREPARED IN THE OFFICE OF:

Pennoni

PENNONI ASSOCIATES INC.
5430 WADE PARK BLVD., SUITE 106,
RALEIGH, NC 27607 PHONE: 919.929.1173
FAX: 919.493.6548 NC LICENSE #F-1267

WAYNE WILEY — PROJECT UTILITY COORDINATOR

DIVISION OF HIGHWAYS
DIVISION 11
801 STATESVILLE ROAD
NORTH WILKESBORO, NC 28659
PHONE (336) 903–9101
FAX (336) 667–4549

DANIEL ADAMS, PE — DIVISION PROJECT TEAM LEAD
BRANDON GREER — DIVISION UTILITY ENGINEER
ALEX WINEBARGER — DIVISION UTILITY COORDINATOR

10/28/24

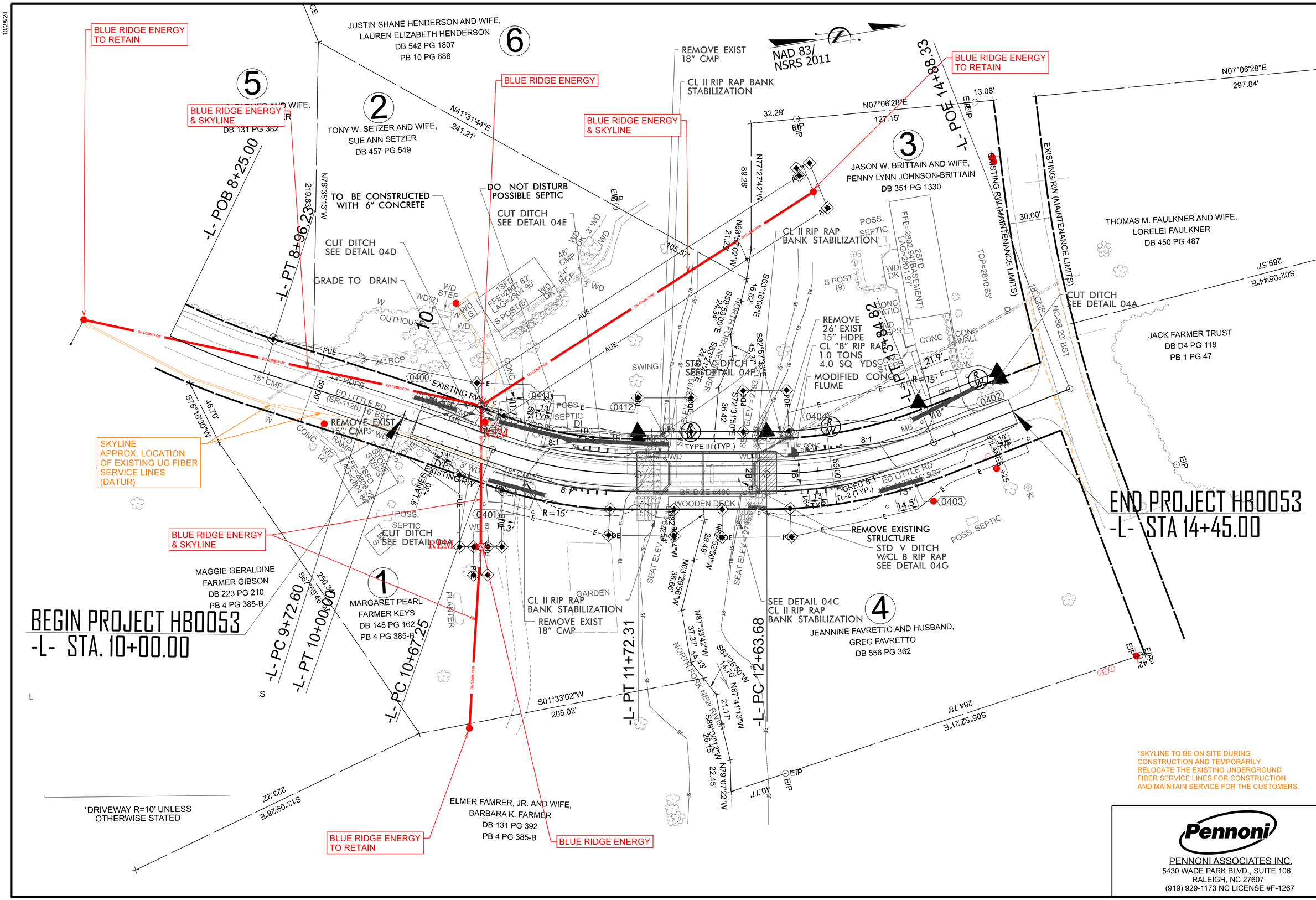

HB-0053

UO-2

NORTH CAROLINA DEPARTMENT OF TRANSPORTATION
ASHE COUNTY

UTILITY DESIGN UNIT

ALL PROPOSED UTILITY WORK SHOWN ON THIS SHEET WILL BE DONE BY OTHERS. NO PAYMENT WILL BE MADE TO THE CONTRACTOR FOR UTILITY WORK SHOWN ON THIS SHEET.

DESIGNED BY:
DRAWN BY:
CHECKED BY:
APPROVED BY:
REVISED:

UTILITIES ENGINEERING SEC.
PHONE:(919)707-6690
FAX:(919)250-4151

Pennoni

PENNONI ASSOCIATES INC.
5430 WADE PARK BLVD., SUITE 106,
RALEIGH, NC 27607
(919) 929-1173 NC LICENSE #F-1267

PROJ. REFERENCE NO.	SHEET NO.
HB-0053	X-1

CROSS SECTION INDEX

X-1	CROSS SECTION INDEX
X-1A	CROSS SECTION SUMMARY
X-2 THRU X-8	-L- SECTIONS

PROJ. REFERENCE NO.	SHEET NO.
HB-0053	X-1A

STATE OF NORTH CAROLINA

Approximate quantities only. Unclassified excavation, borrow excavation, fine grading, clearing and grubbing, and removal of existing pavement will be paid for at the lump sum price for

NOTE: EMBANKMENT COLUMN DOES NOT INCLUDE BACKFILL FOR UNDERCUT

CROSS-SECTION SUMMARY

Station L	Uncl. Exc. (cu. yd.)	Embt (cu. yd.)
10+10.00	0	0
10+25.00	11	1
10+50.00	22	2
10+75.00	48	1
11+00.00	62	1
11+25.00	65	0
11+50.00	86	0
11+75.00	62	1
12+00.00	8	5

Station L	Uncl. Exc. (cu. yd.)	Embt (cu. yd.)
12+59.69	0	0
12+75.00	13	4
13+00.00	65	0
13+25.00	94	0
13+50.00	50	1
13+75.00	12	5
14+00.00	8	6
14+25.00	10	3
14+45.00	5	4

DOCUMENT NOT CONSIDERED FINAL
UNLESS ALL SIGNATURES COMPLETED

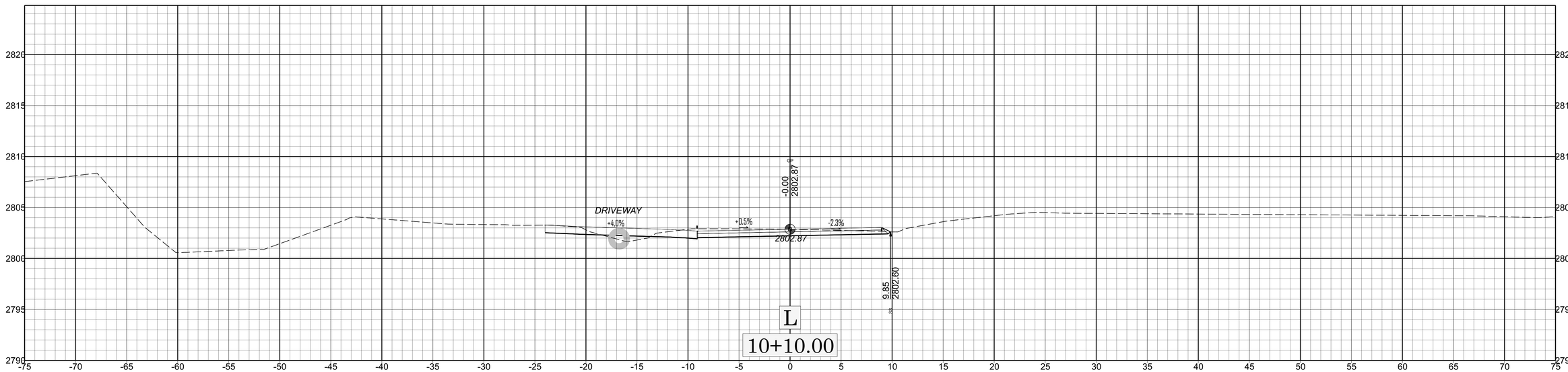

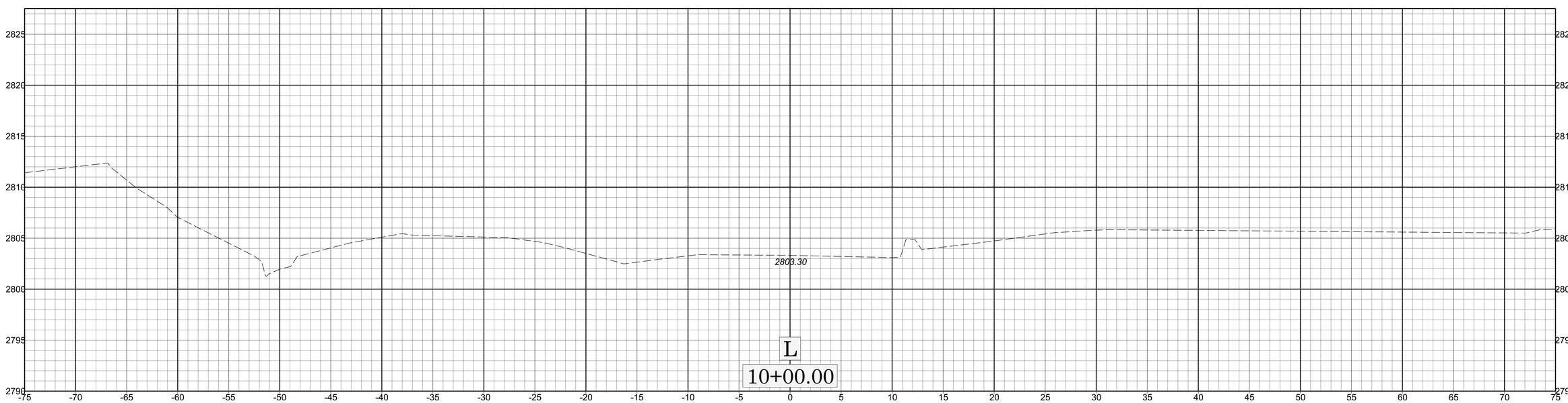

X 002

HB-0053

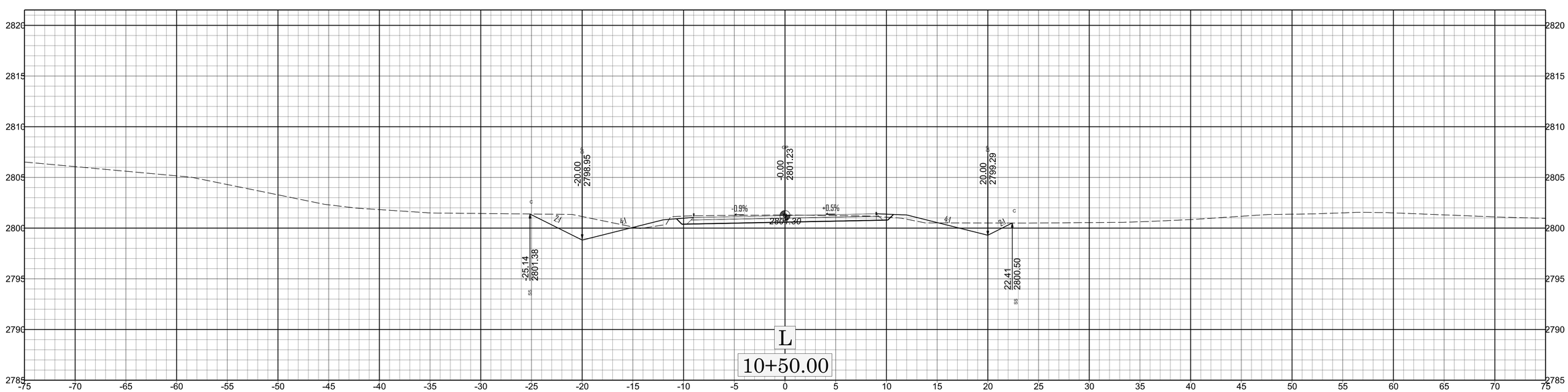
2820
2815
2810
2805
2800
2795
2790
2785
-75 -70 -65 -60 -55 -50 -45 -40 -35 -30 -25 -20 -15 -10 -5 0 5 10 15 20 25 30 35 40 45 50 55 60 65 70 75
-20.00
2798.95
-0.00
2801.23
20.00
2799.29
-0.9%
-0.5%
2801.30
-25.14
2801.38
22.41
2800.50
L
10+50.00

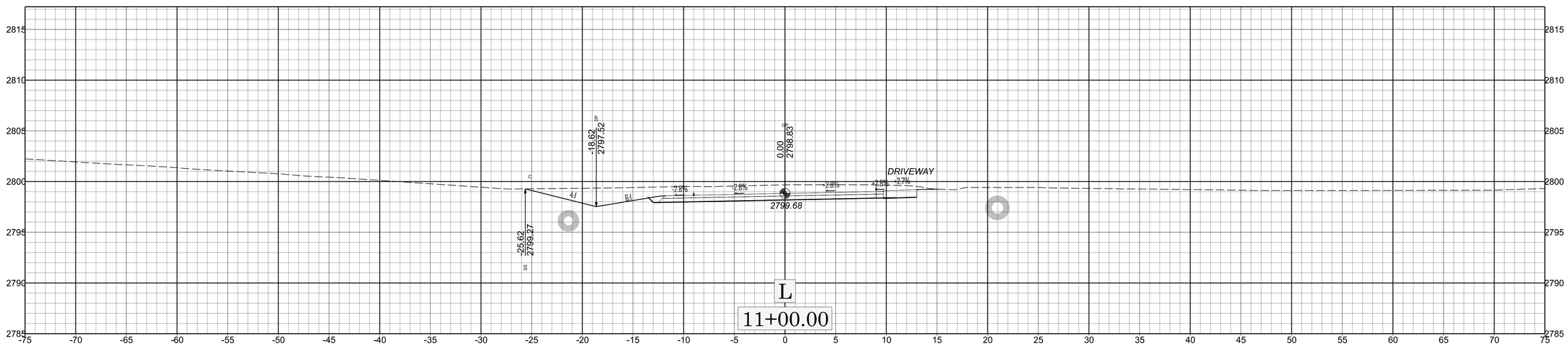
-18.62
2797.52
DP
0.00
2798.83
C
DRIVEWAY
4:1
6:1
-2.8%
-2.5%
-2.0%
-2.0%
-2.7%
2799.68
-25.62
2799.27
SS
L
11+00.00

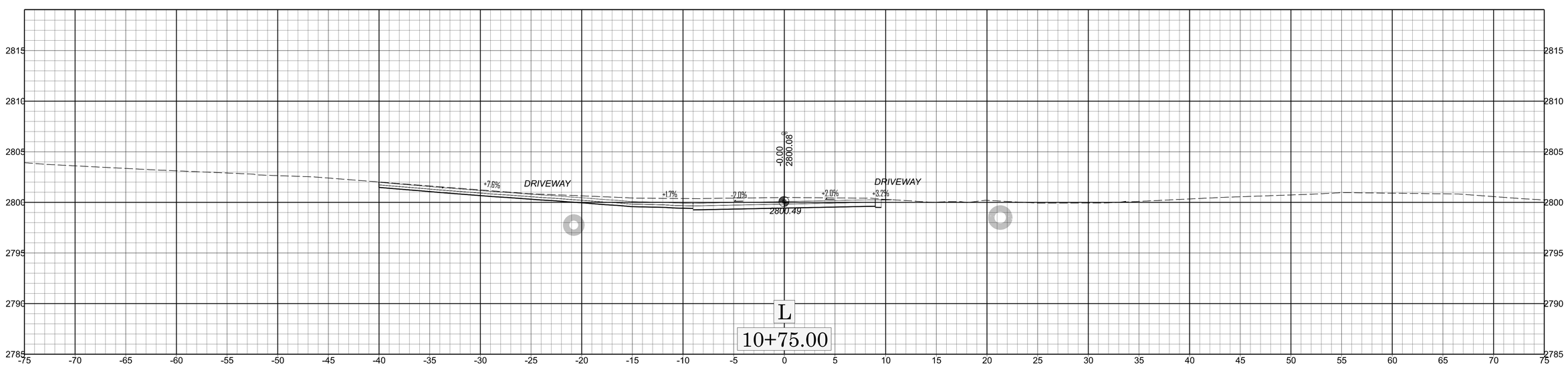
-0.00
2800.08
C
+7.6%
DRIVEWAY
-1.7%
-2.0%
-2.0%
+3.2%
DRIVEWAY
2800.49
L
10+75.00

HB-0053

X 004

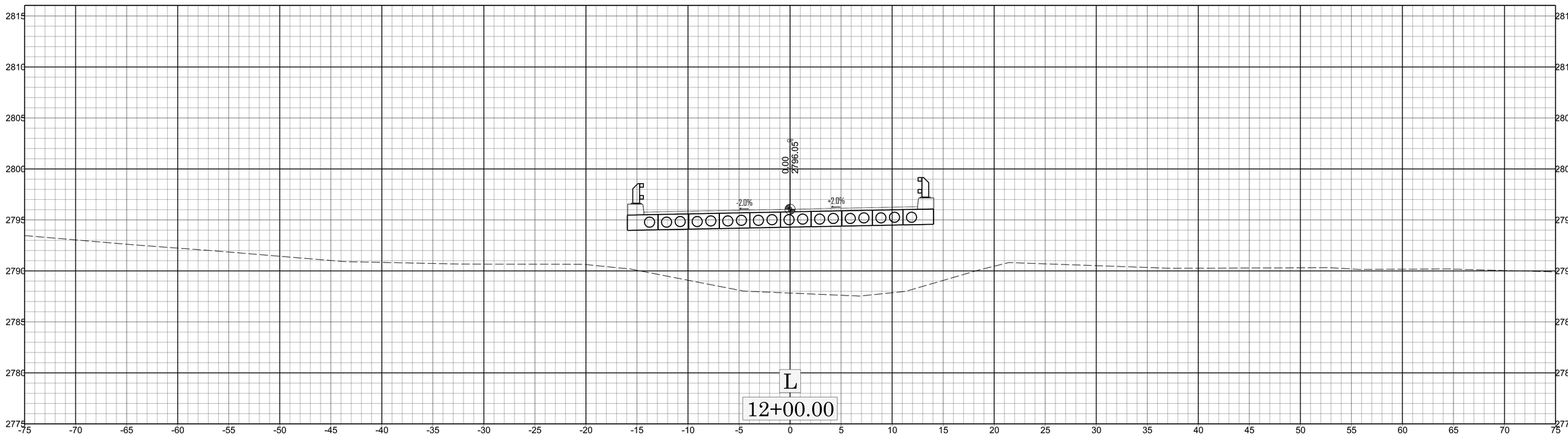

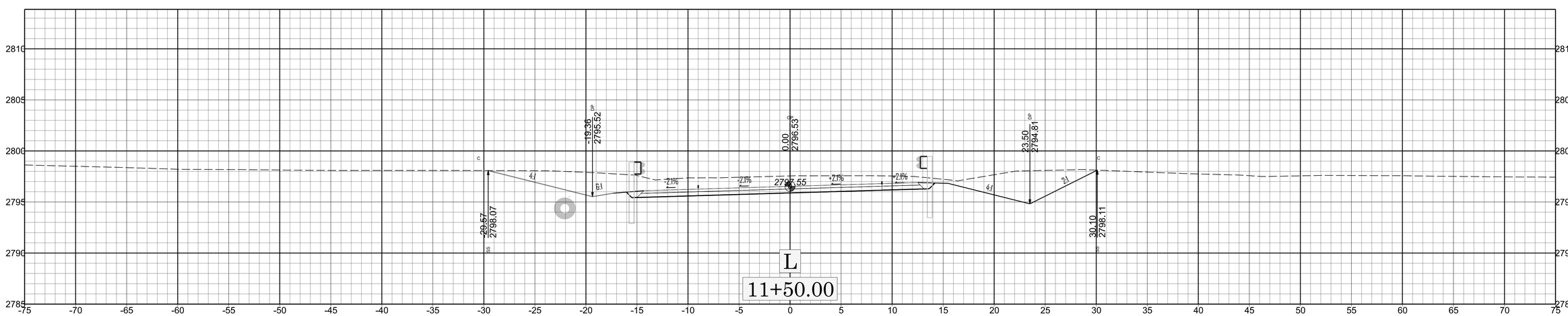

0 5 10

X 005

HB-0053

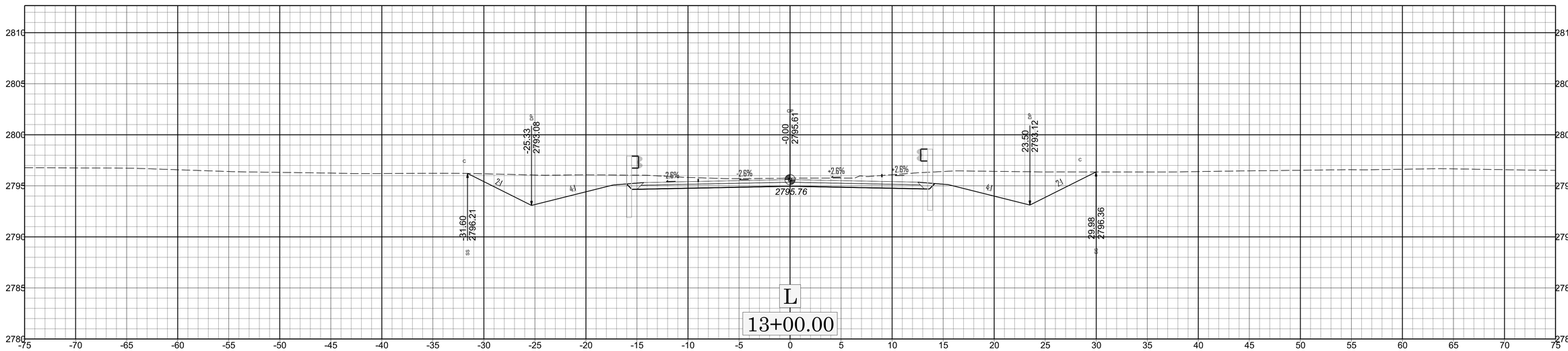
-25.13
2793.08
-0.00
2795.61
23.50
2793.12
-2.5%
-2.5%
-2.5%
-2.5%
2:1
4:1
4:1
2:1
2795.76
-31.60
2796.21
29.98
2796.36
L
13+00.00

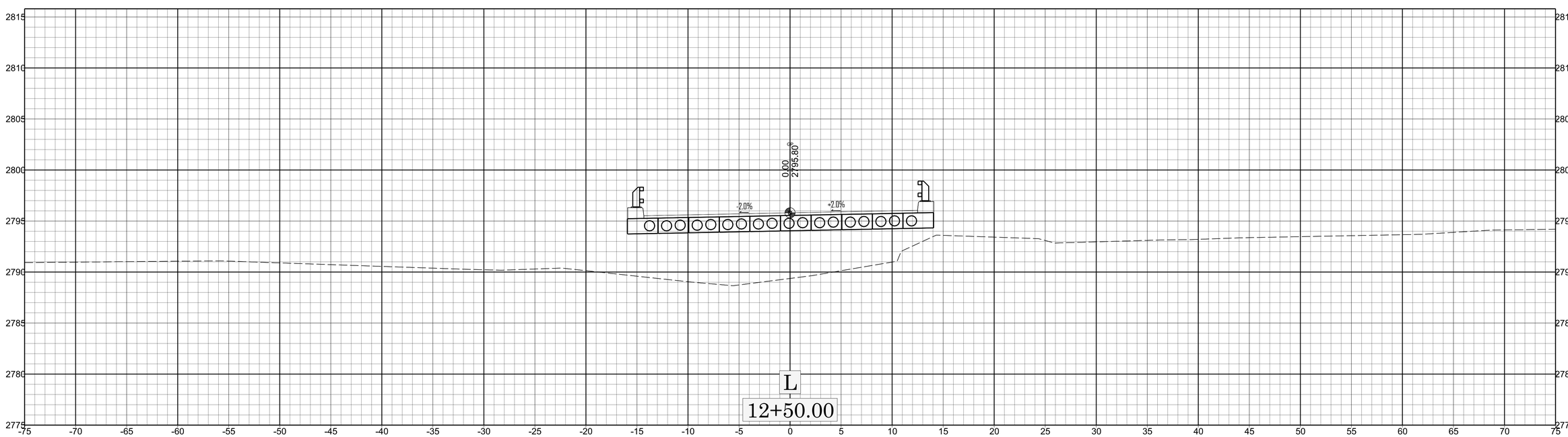
0.00
2795.80
-2.0%
+2.0%
L
12+50.00

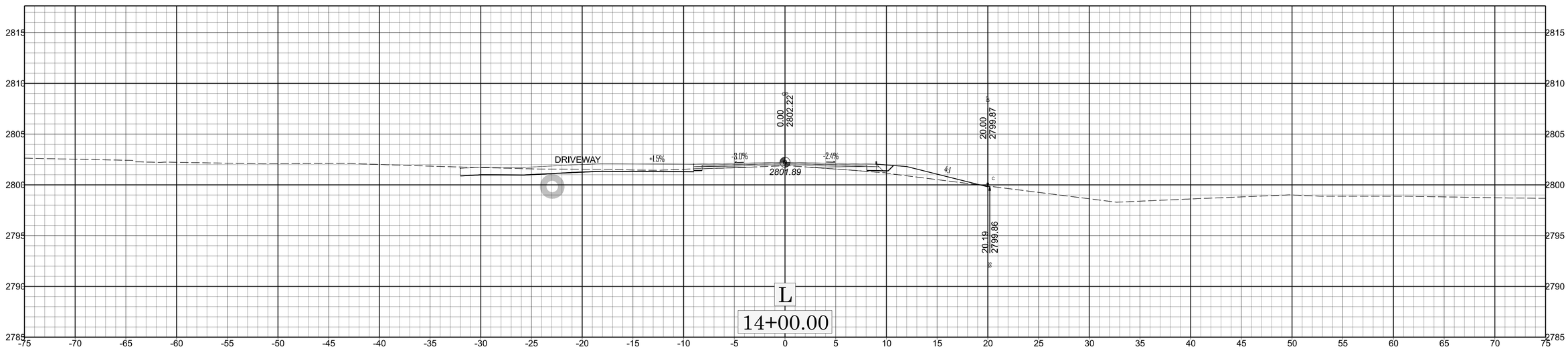
DRIVEWAY
+1.5%
-3.0%
-2.4%
0.00
2802.22'
2801.89
4:1
20.00
2799.87
20.19
2799.86
L
14+00.00

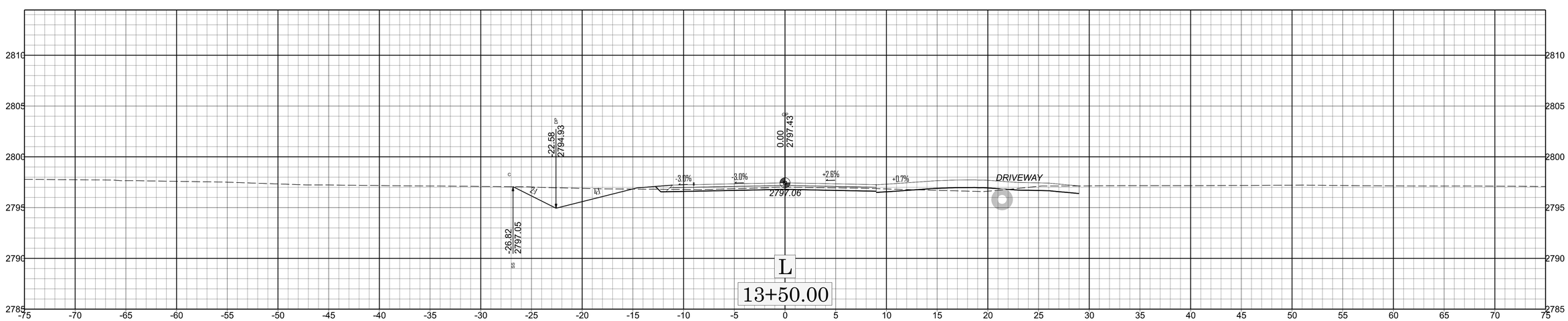
-22.58
2794.93
2:1
4:1
-3.0%
-3.0%
0.00
2797.43
2797.06
+2.6%
+0.7%
DRIVEWAY
-26.82
2797.05
L
13+50.00

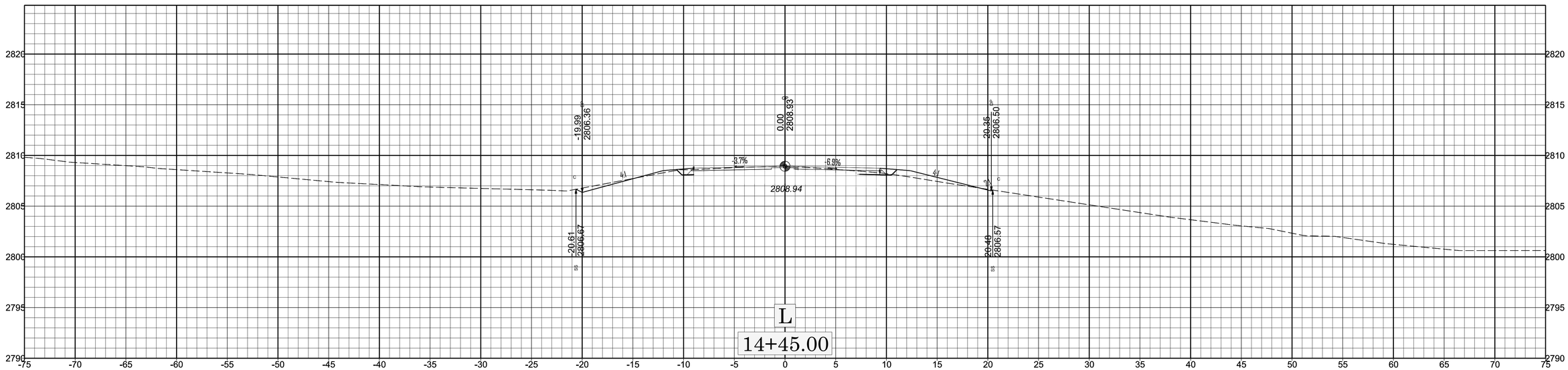
-19.99
2806.36
0.00
2808.93
20.35
2806.50
-3.7%
-6.9%
4:1
4:1
2808.94
-20.61
2806.67
20.48
2806.57
L
14+45.00

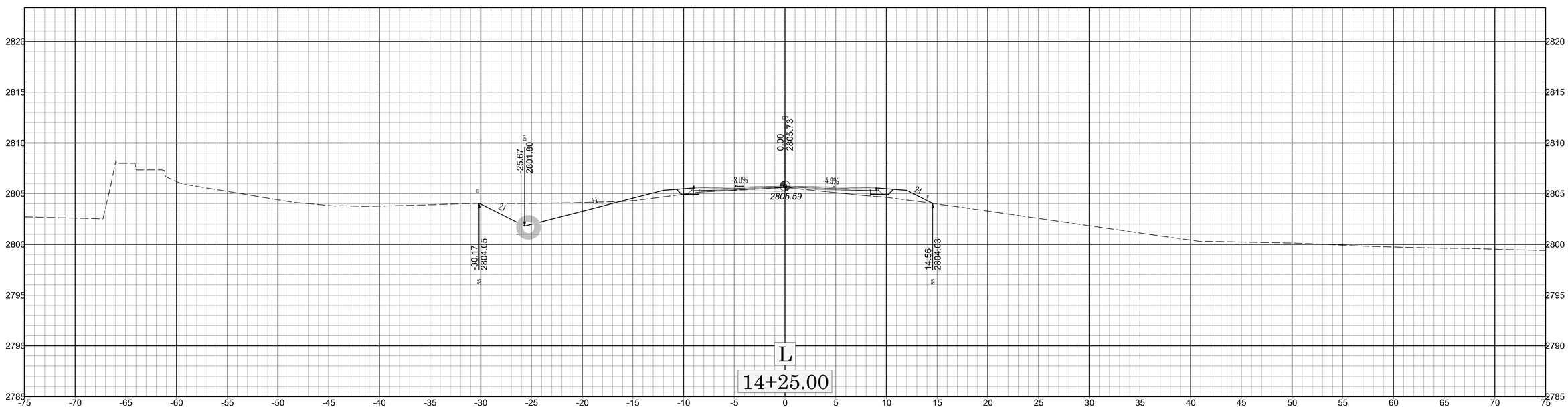
-25.67
2801.82
0.00
2805.73
-3.0%
-4.9%
2:1
4:1
2:1
2805.59
-30.17
2804.15
14.56
2804.63
L
14+25.00

HB-0053

TIP PROJECT: HB-0053

CONTRACT: DK00482

STATE	STATE PROJECT REFERENCE NO.	SHEET NO.	TOTAL SHEETS
N.C.	HB-0053		

STATE PROJ. NO.	F.A. PROJ. NO.	DESCRIPTION
50723.1.1	FBRG111	P.E.
50723.2.1	FBRG111	R / W
50723.2.2	FBRG111	UTILITIES
50723.3.1	FBRG111	CONST.

STATE OF NORTH CAROLINA
DIVISION OF HIGHWAYS

ASHE COUNTY

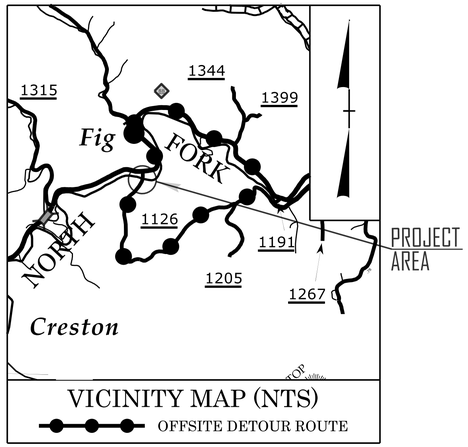

LOCATION: REPLACE BRIDGE NO. 040480 ON SR 1126 (ED LITTLE RD) OVER NORTH FORK NEW RIVER

TYPE OF WORK: GRADING, PAVING, STRUCTURE AND DRAINAGE

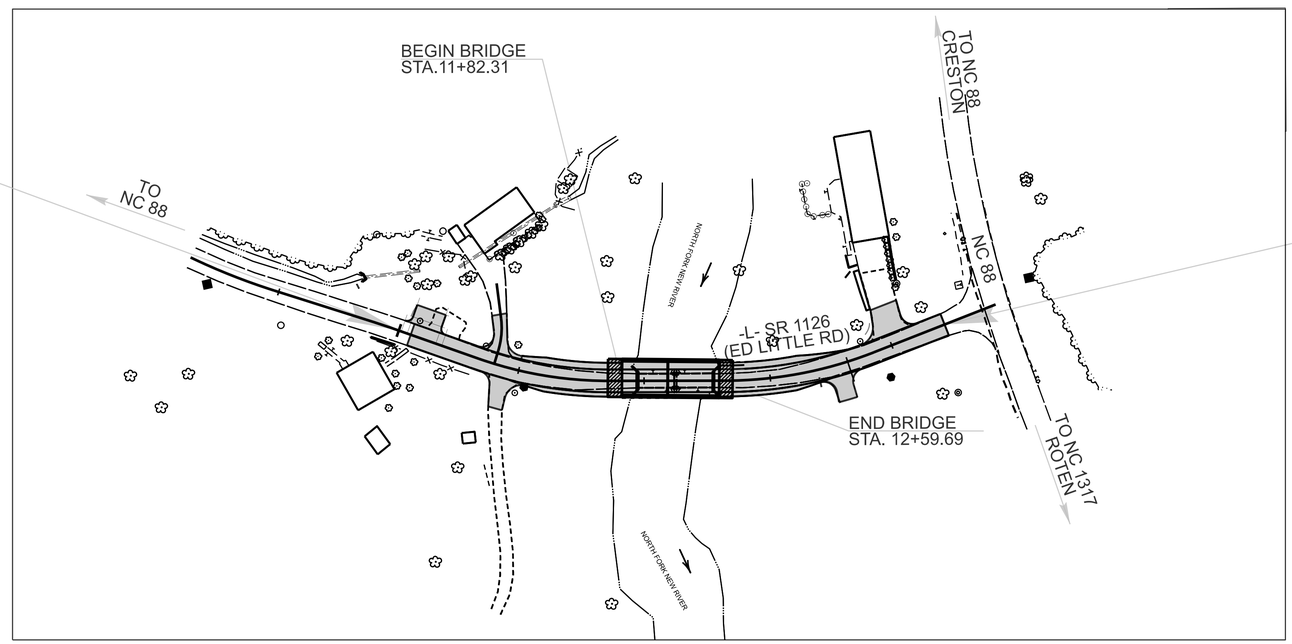

STRUCTURES

DESIGN DATA

ADT (2025) = 150
ADT (2045) = 223
T = 8 %
V = 15 MPH

* TTST = 6% DUAL = 2%
FUNC CLASS = RURAL LOCAL

SUBREGIONAL TIER

PROJECT LENGTH

LENGTH ROADWAY STATE PROJECT HB-0053 = 0.067 MILES
LENGTH STRUCTURE PROJECT HB-0053 = 0.015 MILES

TOTAL LENGTH STATE PROJECT HB-0053 = 0.082 MILES

Prepared for:
DIVISION OF HIGHWAYS
DIVISION 11
801 STATESVILLE RD.
NORTH WILKESBORO NC, 28659

2024 STANDARD SPECIFICATIONS

LETTING DATE :

SEPTEMBER 17, 2026

RAMIE SHAW
PROJECT ENGINEER

JEFFREY KEPICH
PROJECT DESIGN ENGINEER

Docusign Envelope ID: DA6AC54A-2325-88F7-839D-EF33E5ACDAC5

F.A. PROJECT NO. FBRG111

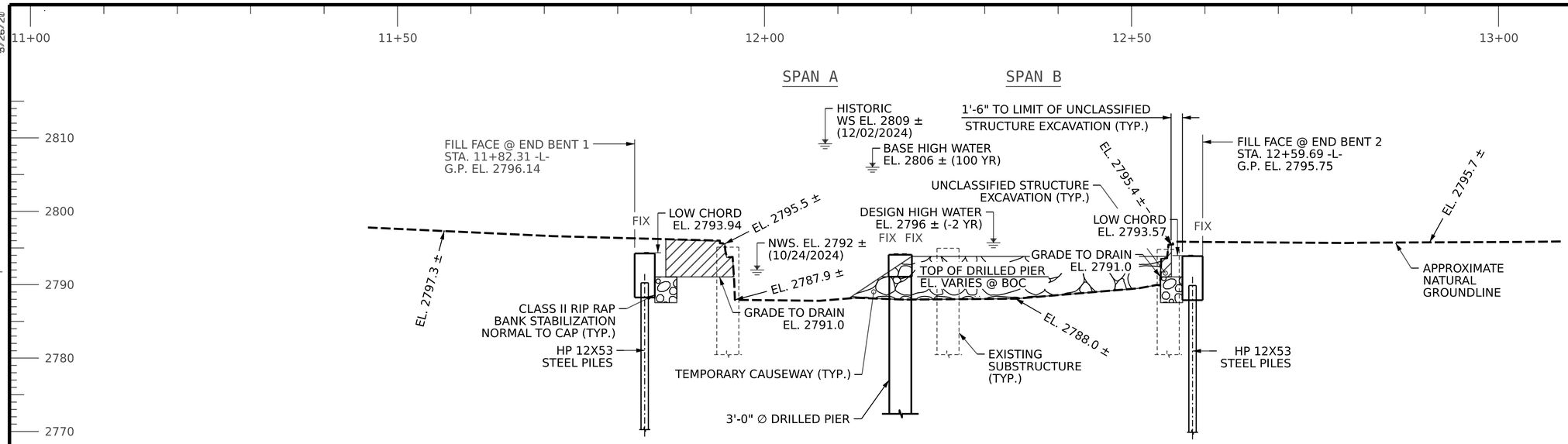

SECTION ALONG -L-

HORIZONTAL CURVE DATA -L-

P.I. STA. = 11+20.30 -L-	P.I. STA. = 13+24.96 -L-
Δ = 19° 28' 51.7" (LT)	Δ = 21° 21' 20.00" (LT)
L = 105.06'	L= 121.14'
T = 53.04'	T = 61.28'
R = 309.0'	R = 325.00'
D = 18° 32' 32.40"	D = 17° 37' 46.10"

-5.0666% -0.5000%

GRADE DATA

P.I. STA. = 11+50.00 -L-
ELEV. = 2796.30
V.C. = 40.00'

-0.5000% 16.0970%

GRADE DATA

P.I. STA. = 13+60.00 -L-
ELEV. = 2795.25
V.C. = 140.00'

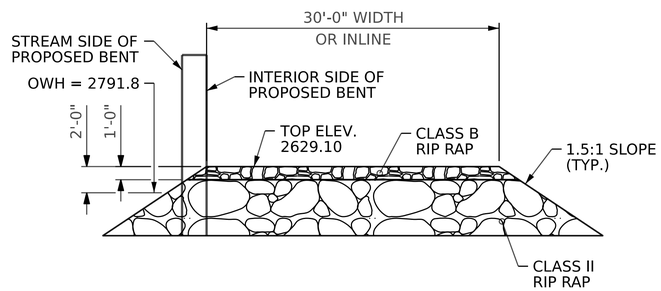

TEMPORARY CAUSEWAY DETAIL

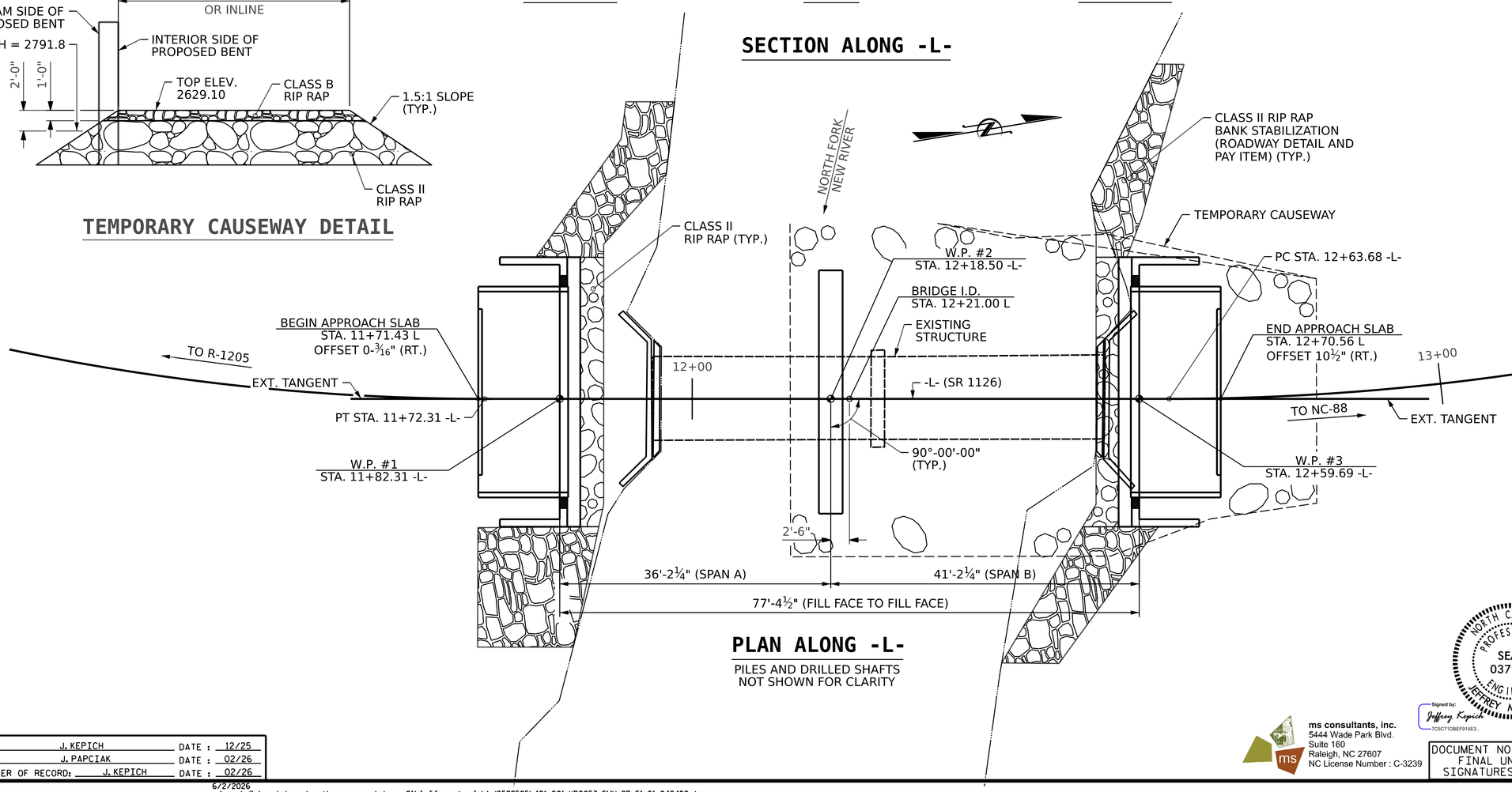

PLAN ALONG -L-

PILES AND DRILLED SHAFTS NOT SHOWN FOR CLARITY

I HEREBY CERTIFY THESE PLANS ARE THE AS-BUILT PLANS

PROJECT NO. HB-0053
ASHE COUNTY
STATION: 12+21.00 -L-

SHEET 1 OF 6 REPLACES BRIDGE NO. 040480

STATE OF NORTH CAROLINA
DEPARTMENT OF TRANSPORTATION
RALEIGH

GENERAL DRAWING

FOR BRIDGE ON SR 1126
OVER NORTH FORK NEW RIVER
BETWEEN SR 1205 & NC 88

NORTH CAROLINA PROFESSIONAL SEAL 037903 ENGINEER JEFFREY M KEPICH

Signed by: Jeffrey Kepich 7C5C71DBEF914E3... 6/12/2026

ms consultants, inc.
5444 Wade Park Blvd.
Suite 160
Raleigh, NC 27607
NC License Number : C-3239

DOCUMENT NOT CONSIDERED FINAL UNLESS ALL SIGNATURES COMPLETED

REVISIONS								SHEET NO.
NO.	BY:	DATE:	NO.	BY:	DATE:			S1-01
1			3					TOTAL SHEETS
2			4					23

DRAWN BY : J. KEPICH DATE : 12/25
CHECKED BY : J. PAPCIAK DATE : 02/26
DESIGN ENGINEER OF RECORD: J. KEPICH DATE : 02/26

6/2/2026
c:\workdir\ncdot-pw.bentley.com_ncdot-pw-01\jeffrey kepich\d0529525\401_001_HB0053_SMU_GD_S1-01_040480.dgn
jkepich

5/26/20

Docusign Envelope ID: DA6AC54A-2325-88F7-839D-EF33E5ACDAC5

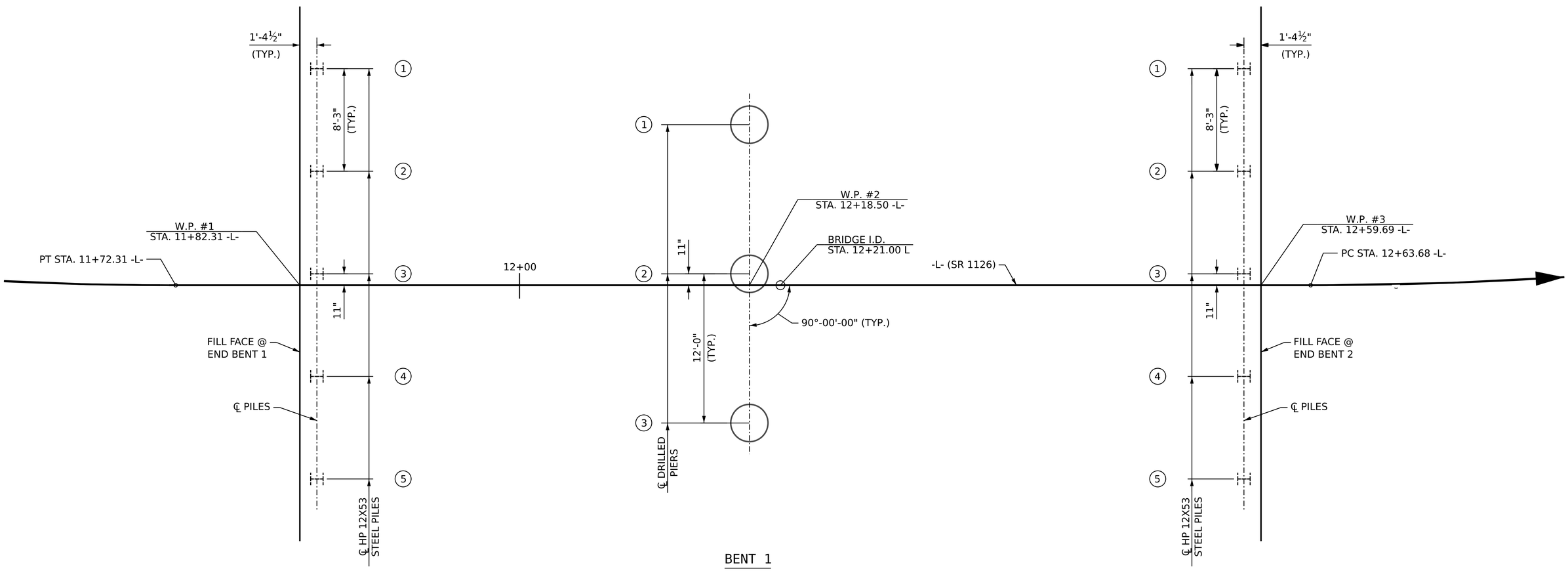

FOUNDATION LAYOUT

PROJECT NO. HB-0053

ASHE COUNTY

STATION: 12+21.00 -L-

SHEET 2 OF 6

NOTES

FOR PILES, SEE SECTION 450 OF THE STANDARD SPECIFICATIONS.

FOR DRILLED PIERS, SEE SECTION 411 OF THE STANDARD SPECIFICATIONS.

PILE EXCAVATION FOR END NOS. 1 AND 2 WILL EXTEND A MINIMUM OF 10 FT BELOW BOTTOM OF CAP OR 3 FT INTO ROCK, WHICHEVER IS DEEPER. ROCK IS DEFINED BY SECTION 411 OF THE STANDARD SPECIFICATIONS.

FILL HOLES FOR PILE EXCAVATION AT BENT NOS. 1 AND 2 WITH CONCRETE.

NORTH CAROLINA PROFESSIONAL SEAL 037903 ENGINEER JEFFREY M KEPICH

Signed by: Jeffrey Kepich 7C5C71DBEF914E3... 6/12/2026

ms consultants, inc.
5444 Wade Park Blvd.
Suite 160
Raleigh, NC 27607
NC License Number : C-3239

DOCUMENT NOT CONSIDERED FINAL UNLESS ALL SIGNATURES COMPLETED

STATE OF NORTH CAROLINA
DEPARTMENT OF TRANSPORTATION
RALEIGH

FOUNDATION LAYOUT

REVISIONS						SHEET NO.
NO.	BY:	DATE:	NO.	BY:	DATE:	S1-02
1			3			TOTAL SHEETS
2			4			23

DRAWN BY : J. KEPICH DATE : 12/25
CHECKED BY : J. PAPCIAK DATE : 02/26
DESIGN ENGINEER OF RECORD: J. KEPICH DATE : 02/26

6/2/2026
c:\workdir\ncdot-pw.bentley.com_ncdot-pw-01\jeffrey kepich\d0529525\401_003_HB0053_SMU_FL_S1-02_040480.dgn
jkepich

Docusign Envelope ID: DA6AC54A-2325-88F7-839D-EF33E5ACDAC5

8/26/21

SUMMARY OF PILE INFORMATION/INSTALLATION

(Blank entries indicate item is not applicable to structure)

End Bent / Bent No, Pile(s) #(-#) (e.g., "Bent 1, Piles 1-5")	Number of Piles per Line	Factored Resistance per Pile KIPS	Pile Cut-Off (Top of Pile) Elevation FT	Estimated Pile Length per Pile FT	Scour Critical Elevation FT	Driven Piles			Predrilling for Piles **			Drilled-In Piles		
						Minimum Pile Tip (Tip No Higher Than) Elevation FT	Required Driving Resistance (RDR)* per pile KIPS	Pile Redrives Quantity EACH	Predrilling Length per Pile LIN FT	Predrilling Elevation (Elevation Not To Predrill Below) FT	Maximum Predrilling Diameter INCHES	Pile Excavation (Bottom of Hole) Elevation FT	Pile Excavation Not In Soil per Pile LIN FT	Pile Excavation In Soil per Pile LIN FT
End Bent No. 1 (Piles 1-3)	3	135		20			225					2778	3	15
End Bent No. 1 (Piles 4-5)	2	135		15			225					2778	3	6
End Bent No. 2	5	135		15			225					2777	3	6
TOTAL QUANTITY:													30	87

$$^{*}RDR = \frac{Factored\ Resistance + Factored\ Drag\ Load + Factored\ Dead\ Load}{Dynamic\ Resistance\ Factor} + Nominal\ Drag\ Load\ Resistance + Nominal\ Resistance\ from\ Scourable\ Material$$

** Predrilling for Piles is required for end bents/bents with a predrilling length and at the Contractor's option for end bents/bents with predrilling information but no predrilling length.

PILE DESIGN INFORMATION

(Blank entries indicate item is not applicable to structure)

End Bent / Bent No, Pile(s) #(-#) (e.g., "Bent 1, Piles 1-5")	Factored Axial Load per Pile KIPS	Factored Drag Load per Pile KIPS	Factored Dead Load * per Pile KIPS	Dynamic Resistance Factor	Nominal Drag Resistance per Pile KIPS	Nominal Scour Resistance per Pile KIPS
End Bent No. 1	135			0.6		
End Bent No. 2	135			0.6		

* Factored Dead Load is factored weight of pile above the ground line.

SUMMARY OF DRILLED PIER INFORMATION/INSTALLATION

(Blank entries indicate item is not applicable to structure)

End Bent / Bent No, Pier(s) #(-#) (e.g., "Bent 1, Piers 1-3")	Number of Piers per Line	Factored Resistance per Pier KIPS	Required Drilled Pier Tip Elevation FT	Required Tip Resistance per Pier KSF	Scour Critical Elevation FT	Minimum Drilled Pier Penetration Into Rock per Pier LIN FT	Drilled Pier Length* per Pier LIN FT	Drilled Pier Length Not In Soil* per Pier LIN FT	Drilled Pier Length In Soil* per Pier LIN FT	Permanent Steel Casing Required? YES	Permanent Steel Casing Tip Elevation (Elevation Not To Extend Casing Below) FT	Permanent Steel Casing Length** per Pier LIN FT
Bent No. 1 (Pier 1)	1	520	2770.00	20	2780.00	6	21			YES	2783.00	8
Bent No. 2 (Piers 2-3)	2	520	2760.00	20	2780.00	6	31			YES	2783.00	8
TOTAL QUANTITY:							83					24

* Drilled Pier Length, Drilled Pier Length Not in Soil and Drilled Pier Length in Soil represent estimated drilled pier quantities and are measured and paid for as either "____ Dia. Drilled Piers" or "____ Dia. Drilled Piers Not in Soil" and "____ Dia. Drilled Piers in Soil" in accordance with Article 411-7 of the NCDOT Standard Specifications. For bents with a not in soil pay item, drilled piers through air or water will be paid at the contract unit price for "__Dia. Drilled Piers in Soil."

** Permanent Steel Casing Length equals the difference between the ground line or top of drilled pier elevation, whichever is higher, and the permanent casing tip elevation and is measured and paid for as "Permanent Steel Casing for ____ Dia. Drilled Pier" in accordance with Article 411-7 of the NCDOT Standard Specifications.

SUMMARY OF DRILLED PIER TESTING

(Blank entries indicate item is not applicable to structure)

End Bent / Bent No, Pier(s) #(-#) (e.g., "Bent 1, Piers 1-3")	Standard Penetration Test (SPT) EACH	Crosshole Sonic Logging (CSL) EACH	Thermal Integrity Profiler (TIP) EACH	Shaft Inspection Device (SID) EACH	Pile Integrity Test (PIT) EACH
Bent No. 1		1			
TOTAL QUANTITY:		1			

NOTES:

1. The Pile Foundation Tables are based on the bridge substructure design and foundation recommendations sealed by a North Carolina Professional Engineer (Michael H. Stephens, #028893) on 01-30-2026.
2. Total Pile Driving Equipment Setup quantity (not shown in Pile Foundation Tables) equals the number of driven piles, i.e., the number of piles with a Required Driving Resistance.
3. The Engineer may adjust the quantity for DPT Testing, Pipe Pile Plates, Permanent Steel Casing, SPTs, TIPs, CSL Testing, SID Inspections and PITs when necessary.

PROJECT NO. HB-0053

ASHE COUNTY

STATION: 12+21.00 -L-

SHEET 3 OF 6

STATE OF NORTH CAROLINA
DEPARTMENT OF TRANSPORTATION
RALEIGH

PILE AND DRILLED PIER FOUNDATION TABLES

NORTH CAROLINA PROFESSIONAL SEAL 037903 ENGINEER JEFFREY M. KEPICH

Signed by: Jeffrey Kepich 7C5C71DBEF914E3... 6/12/2026

ms consultants, inc.
5444 Wade Park Blvd.
Suite 160
Raleigh, NC 27607
NC License Number : C-3239

DOCUMENT NOT CONSIDERED FINAL UNLESS ALL SIGNATURES COMPLETED

REVISIONS						SHEET NO.
NO.	BY:	DATE:	NO.	BY:	DATE:	S1-03
1			3			TOTAL SHEETS
2			4			23

DRAWN BY : J. KEPICH DATE : 12/25
CHECKED BY : J. PAPCIAK DATE : 02/26
DESIGN ENGINEER OF RECORD: J. KEPICH DATE : 02/26

6/2/2026
c:\workdir\ncdot-pw.bentley.com_ncdot-pw-01\jeffrey kepich\d0529525\401_005_HB0053_SMU_FT_S1-03_040480.dgn
jkepich

Docusign Envelope ID: DA6AC54A-2325-88F7-839D-EF33E5ACDAC5

8/26/21

BM. #1 - RAILROAD SPIKE SET IN 20" OAK, STA. 12+67.25 -L- (247.51' RT.) EL. 2794.10'

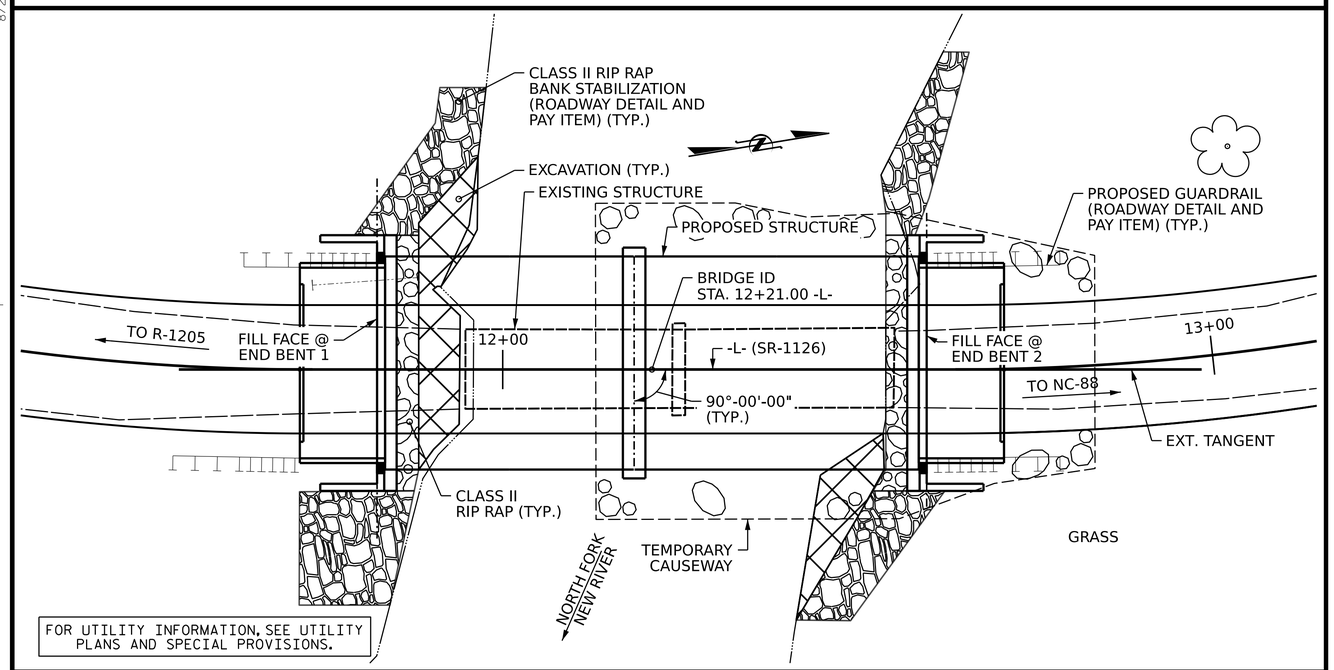

LOCATION SKETCH

NOTES:

ASSUMED LIVE LOAD = HL-93 OR ALTERNATE LOADING.

THIS BRIDGE HAS BEEN DESIGNED IN ACCORDANCE WITH THE AASHTO LRFD BRIDGE DESIGN SPECIFICATIONS.

THIS BRIDGE IS LOCATED IN SEISMIC ZONE 1.

FOR OTHER DESIGN DATA AND GENERAL NOTES, SEE SHEET SN.

FOR SUBMITTAL OR WORKING DRAWINGS, SEE SPECIAL PROVISIONS.

FOR FALSEWORK AND FORMWORK, SEE SPEICAL PROVISIONS.

FOR CRANE SAFETY, SEE SPECIAL PROVISIONS.

FOR GROUT FOR STRUCTURES, SEE SPECIAL PROVISIONS.

THE CONTRACTOR SHALL PROVIDE INDEPENDENT ASSURANCE SAMPLES OF REINFORCING STEEL AS FOLLOWS: FOR PROJECTS UP TO 400 TONS OF REINFORCEMENT STEEL, ONE 30 INCH SAMPLE OF EACH SIZE BAR USED, AND FOR PROJECTS REQUIRING OVER 400 TONS OF REINFORCING STEEL, TWO 30 INCH SAMPLES OF EACH SIZE BAR USED. THE SAMPLE BARS SHOULD COME FROM STEEL ACTUALLY USED IN THE PROJECT AND THE SAMPLES BARS SHOULD BE REPLACED BY SPLICED BARS AS SPECIFIED IN THE SAMPLE BAR REPLACEMENT CHART. PAYMENT FOR THE SAMPLE BARS AND REPLACEMENT REINFORCING STEEL SHALL BE CONSIDERED INCIDENTAL TO VARIOUS PAY ITEMS.

INASMUCH AS THE PAINT SYSTEM ON THE EXISTING STRUCTURAL STEEL CONTAINS LEAD, THE CONTRACTOR'S ATTENTION IS DIRECTED TO ARTICLE 107-1 OF THE STANDARD SPECIFICATIONS. ANY COSTS RESULTING FROM COMPLIANCE WITH APPLICABLE STATE OR FEDERAL REGULATIONS PERTAINING TO HANDLING OF MATERIALS CONTAINING LEAD BASED PAINT SHALL BE INCLUDED IN THE BID PRICE FOR "REMOVAL OF EXISTING STRUCTURE AT STATION 12+21.00 -L-."

THE MATERIAL SHOWN IN THE CROSS-HATCHED AREA SHALL BE EXCAVATED FOR A DISTANCE UP TO 30 FT ON THE WEST SIDE AND 35 FT ON THE EAST SIDE OF CENTERLINE ROADWAY AS DIRECTED BY THE ENGINEER. THIS WORK WILL BE PAID FOR AT THE CONTRACT LUMP SUM PRICE FOR UNCLASSIFIED STRUCTURE EXCAVATION. SEE SECTION 412 OF THE STANDARD SPECIFICATIONS.

THE EXISTING STRUCTURE CONSISTING OF TWO SIMPLE SPANS (2 @ 30'-1") OF STEEL I-BEAMS WITH A CLEAR ROADWAY WIDTH OF 11'-2" ON A TIMBER FLOOR ON REINFORCED CONCRETE SUBSTRUCTURES LOCATED AT THE SAME LOCATION OF PROPOSED STRUCTURE SHALL BE REMOVED. THE EXISTING BRIDGE IS PRESENTLY POSTED FOR LOAD LIMIT. SHOULD THE STRUCTURAL INTEGRITY OF THE BRIDGE DETERIORATE DURING CONSTRUCTION OF THE PROPOSED BRIDGE, A LOAD LIMIT MAY BE POSTED AND MAY BE REDUCED AS FOUND NECESSARY DURING THE LIFE OF THE PROJECT

THE SUBSTRUCTURE OF THE EXISTING BRIDGE INDICATED ON THE PLANS IS FROM THE BEST INFORMATION AVAILABLE. SINCE THIS INFORMATION IS SHOWN FOR THE CONVENIENCE OF THE CONTRACTOR, THE CONTRACTOR SHALL HAVE NO CLAIM WHATSOEVER AGAINST THE DEPARTMENT OF TRANSPORTATION FOR ANY DELAYS OR ADDITIONAL COST INCURRED BASED ON DIFFERENCES BETWEEN THE EXISTING BRIDGE SUBSTRUCTURE SHOWN ON THE PLANS AND THE ACTUAL CONDITIONS AT THE PROJECT SITE.

REMOVAL OF THE EXISTING BRIDGE SHALL BE PERFORMED IN A MANNER THAT PREVENTS DEBRIS FROM FALLING INTO THE WATER. THE CONTRACTOR SHALL SUBMIT DEMOLITION PLANS FOR REVIEW AND REMOVE THE BRIDGE IN ACCORDANCE WITH ARTICLE 402-2 OF THE STANDARD SPECIFICATIONS.

THIS STRUCTURE HAS BEEN DESIGNED IN ACCORDANCE WITH ``HEC 18-EVALUATING SCOUR AT BRIDGES.''

FOR EROSION CONTROL MEASURES, SEE EROSION CONTROL PLANS.

FOR ASBESTOS ASSESSMENT FOR BRIDGE DEMOLITION AND RENOVATION ACTIVITIES, SEE SPECIAL PROVISIONS.

THE SCOUR CRITICAL ELEVATION FOR BENT NO. 1 IS ELEVATION 2780.00. SCOUR CRITICAL ELEVATIONS ARE USED TO MONITOR SCOUR PROBLEMS DURING THE LIFE OF THE STRUCTURE.

DESIGN SCOUR ELEVATION FOR BENT NO. 1 IS 2783.00.

CAUSEWAY NOTE:

IN ORDER TO SURROUND AND CONSTRUCT BENT NO. 1 OF THE PROPOSED BRIDGE A CAUSEWAY BLOCKING 65% OF THE RIVER AREA (AT NORMAL FLOW) WILL BE REQUIRED.

TOTAL BILL OF MATERIAL

	CONSTRUCTION, MAINTENANCE & REMOVAL OF TEMP. ACCESS AT STA. 12+21.00 -L-	REMOVAL OF EXISTING STRUCTURE @ STA. 12+21.00 -L-	ASBESTOS ASSESSMENT	PILE EXCAVATION IN SOIL	PILE EXCAVATION NOT IN SOIL	3'-0" DIA. DRILLED PIERS	PERMANENT STEEL CASING FOR 3'-0" DIA. DRILLED PIER	CSL TESTING	UNCLASSIFIED STRUCTURE EXCAVATION AT STATION 12+21.00 -L-	CONCRETE WEARING SURFACE	GROOVING BRIDGE FLOORS	CLASS A CONCRETE	BRIDGE APPROACH SLABS AT STATION 12+21.00 -L-	REINFORCING STEEL	SPIRAL COLUMN REINFORCING STEEL	PILE DRIVING EQUIPMENT SETUP FOR HP12X53 STEEL PILES	HP 12 X 53 STEEL PILES		32" ALASKA RAIL	ELASTOMERIC BEARINGS	3'-0" X 1'-6" PRESTRESSED CONCRETE CORED SLABS		WATERPROOFING MEMBRANE - CONCRETE WEARING SURFACE
	LUMP SUM	LUMP SUM	LUMP SUM	LIN. FT.	LIN. FT.	LIN. FT.	LIN. FT.	EA.	LUMP SUM	SQ. FT.	SQ. FT.	CU. YDS.	LUMP SUM	LBS.	LBS.	EA.	NO.	LIN.FT.	LIN.FT.	LUMP SUM	NO.	LIN.FT.	SQ. FT.
SUPERSTRUCTURE										2016	1791								135.25		20	750.00	2016
END BENT NO. 1				57.00	15.00							28.40		2919		5	5	90.00					
BENT NO. 1						83.00	24.00	1.00				13.30		8019	1534								
END BENT NO. 2				30.00	15.00							28.40		2919		5	5	75.00					
TOTAL	LUMP SUM	LUMP SUM	LUMP SUM	87.00	30.00	83.00	24.00	1.00	LUMP SUM	2016	1791	70.10	LUMP SUM	13857	1534	10	10	165.00	135.25	LUMP SUM	20	750.00	2016

HYDRAULIC DATA

DESIGN DISCHARGE	= 1800 C.F.S
FREQUENCY OF DESIGN DISCHARGE	= -2 YEARS*
DESIGN HIGH WATER ELEVATION	= 2796.10'
DRAINAGE AREA	= 95.1 SQ. MI.
BASE DISCHARGE (Q100)	= 14300 C.F.S.
BASE HIGH WATER ELEVATION	= 2806.10'

*DESIGN MAINTAINS OR IMPROVES EXISTING LEVEL OF SERVICE

OVERTOPPING FLOOD DATA

OVERTOPPING DISCHARGE	= 1800 C.F.S.
FREQUENCY OF OVERTOPPING FLOOD	= -2 YEARS
OVERTOPPING FLOOD ELEVATION	= 2795.80' **

**SAG POINT AT STA. 12+94.22 -L- (RT. SHOULDER)

SAMPLE BAR REPLACEMENT

SIZE	LENGTH
#3	6'-2"
#4	7'-4"
#5	8'-6"
#6	9'-8"
#7	10'-10"
#8	12'-0"
#9	13'-2"
#10	14'-6"
#11	15'-10"

PROJECT NO. HB-0053

ASHE COUNTY

STATION: 12+21.00 -L-

SHEET 4 OF 6

STATE OF NORTH CAROLINA
DEPARTMENT OF TRANSPORTATION
RALEIGH

GENERAL DRAWING

FOR BRIDGE ON SR 1126
OVER NORTH FORK NEW RIVER
BETWEEN SR 1205 & NC 88

NORTH CAROLINA PROFESSIONAL SEAL 037903 ENGINEER JEFFREY M. KEPICH

Signed by: Jeffrey Kepich 7C5C71DBEF914E3... 6/12/2026

ms consultants, inc.
5444 Wade Park Blvd.
Suite 160
Raleigh, NC 27607
NC License Number : C-3239

DOCUMENT NOT CONSIDERED FINAL UNLESS ALL SIGNATURES COMPLETED

REVISIONS						SHEET NO.
NO.	BY:	DATE:	NO.	BY:	DATE:	S1-04
1			3			TOTAL SHEETS
2			4			23

DRAWN BY : J. KEPICH DATE : 01/26
CHECKED BY : J. PAPCIAK DATE : 02/26
DESIGN ENGINEER OF RECORD: J. KEPICH DATE : 01/26

6/12/2026
c:\workdir\ncdot-pw.bentley.com_ncdot-pw-01\jeffrey kepich\d0529525\401_007_HB0053_SMU_BM_S1-04_040480.dgn
jkepich

Docusign Envelope ID: DA6AC54A-2325-88F7-839D-EF33E5ACDAC5

8/26/21

LOAD AND RESISTANCE FACTOR RATING (LRFR) SUMMARY FOR PRESTRESSED CONCRETE GIRDERS

LOAD TYPE		VEHICLE	WEIGHT (W) (TONS)	CONTROLLING LOAD RATING (#)	MINIMUM RATING FACTORS (RF)	TONS = W x RF	STRENGTH I LIMIT STATE											SERVICE III LIMIT STATE						COMMENT NUMBER
								MOMENT					SHEAR						MOMENT					
							LIVE-LOAD FACTORS (γ LL)	DISTRIBUTION FACTORS (DF)	RATING FACTOR	SPAN	GIRDER LOCATION	DISTANCE FROM LEFT END OF SPAN (ft)	DISTRIBUTION FACTORS (DF)	RATING FACTOR	SPAN	GIRDER LOCATION	DISTANCE FROM LEFT END OF SPAN (ft)	LIVE-LOAD FACTORS (γ LL)	DISTRIBUTION FACTORS (DF)	RATING FACTOR	SPAN	GIRDER LOCATION	DISTANCE FROM LEFT END OF SPAN (ft)	
DESIGN LOAD		HL-93 (INVENTORY)	N/A	1	1.68	--	1.75	0.26	1.680	35'	E	17.00	0.56	1.700	35'	E	3.00	0.80	0.26	1.760	35'	E	17.00	
DESIGN LOAD		HL-93 (OPERATING)	N/A		2.18	--	1.35	0.26	2.180	35'	E	17.00	0.56	2.840	35'	E	3.00	N/A	--	--	--	--	--	
DESIGN LOAD		HS-20 (INVENTORY)	36.000	2	2.21	79.50	1.75	0.26	2.210	35'	E	13.50	0.56	2.250	35'	E	3.00	0.80	0.26	2.330	35'	E	13.50	
DESIGN LOAD		HS-20 (OPERATING)	36.000		2.86	103.06	1.35	0.26	2.860	35'	E	13.50	0.47	3.360	35'	I	3.00	N/A	--	--	--	--	--	
LEGAL LOAD	SINGLE VEHICLE (SV)	SNSH	13.500		4.02	54.27	1.40	0.26	4.800	35'	E	17.00	0.47	6.730	35'	I	3.00	0.80	0.26	4.020	35'	E	17.00	
LEGAL LOAD	SINGLE VEHICLE (SV)	SNGARBS2	20.000		3.42	68.42	1.40	0.26	4.050	35'	E	13.50	0.47	5.080	35'	I	3.00	0.80	0.26	3.420	35'	E	13.50	
LEGAL LOAD	SINGLE VEHICLE (SV)	SNAGRIS2	22.000		3.39	74.67	1.40	0.26	4.020	35'	E	20.50	0.47	4.850	35'	I	3.00	0.80	0.26	3.390	35'	E	20.50	
LEGAL LOAD	SINGLE VEHICLE (SV)	SNCOTTS3	27.250		2.01	54.84	1.40	0.26	2.400	35'	E	17.00	0.47	3.310	35'	I	3.00	0.80	0.26	2.010	35'	E	17.00	
LEGAL LOAD	SINGLE VEHICLE (SV)	SNAGGRS4	34.925		1.86	65.02	1.40	0.26	2.220	35'	E	17.00	0.47	2.997	35'	I	31.00	0.80	0.26	1.860	35'	E	17.00	
LEGAL LOAD	SINGLE VEHICLE (SV)	SNS5A	35.550		1.81	64.24	1.40	0.26	2.160	35'	E	17.00	0.47	3.160	35'	I	3.00	0.80	0.26	1.810	35'	E	17.00	
LEGAL LOAD	SINGLE VEHICLE (SV)	SNS6A	39.950		1.74	69.68	1.40	0.26	2.080	35'	E	17.00	0.47	2.950	35'	I	3.00	0.80	0.26	1.740	35'	E	17.00	
LEGAL LOAD	SINGLE VEHICLE (SV)	SNS7B	42.000	3	1.66	69.90	1.40	0.26	1.990	35'	E	17.00	0.47	3.040	35'	I	3.00	0.80	0.26	1.660	35'	E	17.00	
LEGAL LOAD	TRUCK TRACTOR SEMI-TRAILER (TTST)	TNAGRIT3	33.000		2.15	71.08	1.40	0.26	2.570	35'	E	17.00	0.47	3.490	35'	I	3.00	0.80	0.26	2.150	35'	E	17.00	
LEGAL LOAD	TRUCK TRACTOR SEMI-TRAILER (TTST)	TNT4A	33.075		2.15	71.21	1.40	0.26	2.570	35'	E	17.00	0.47	3.270	35'	I	31.00	0.80	0.26	2.150	35'	E	17.00	
LEGAL LOAD	TRUCK TRACTOR SEMI-TRAILER (TTST)	TNT6A	41.600		1.89	78.45	1.40	0.26	2.250	35'	E	17.00	0.47	3.200	35'	I	3.00	0.80	0.26	1.890	35'	E	17.00	
LEGAL LOAD	TRUCK TRACTOR SEMI-TRAILER (TTST)	TNT7A	42.000		1.95	81.94	1.40	0.26	2.330	35'	E	17.00	0.47	2.970	35'	I	3.00	0.80	0.26	1.950	35'	E	17.00	
LEGAL LOAD	TRUCK TRACTOR SEMI-TRAILER (TTST)	TNT7B	42.000		1.92	80.50	1.40	0.26	2.290	35'	E	17.00	0.56	2.820	35'	E	3.00	0.80	0.26	1.920	35'	E	17.00	
LEGAL LOAD	TRUCK TRACTOR SEMI-TRAILER (TTST)	TNAGRIT4	43.000		1.93	83.19	1.40	0.26	2.290	35'	E	13.50	0.56	2.590	35'	E	3.00	0.80	0.26	1.930	35'	E	13.50	
LEGAL LOAD	TRUCK TRACTOR SEMI-TRAILER (TTST)	TNAGT5A	45.000		1.79	80.52	1.40	0.26	2.140	35'	E	17.00	0.56	2.890	35'	E	3.00	0.80	0.26	1.790	35'	E	17.00	
LEGAL LOAD	TRUCK TRACTOR SEMI-TRAILER (TTST)	TNAGT5B	45.000		1.73	77.67	1.40	0.26	2.060	35'	E	17.00	0.56	2.320	35'	E	3.00	0.80	0.26	1.730	35'	E	17.00	
EMERGENCY VEHICLE (EV)		EV2	28.750		2.46	70.77	1.30	0.26	3.140	35'	E	13.50	0.47	3.840	35'	I	3.00	0.80	0.26	2.460	35'	E	20.50	
EMERGENCY VEHICLE (EV)		EV3	43.000	4	1.60	68.76	1.30	0.26	2.060	35'	E	17.00	0.56	2.320	35'	E	3.00	0.80	0.26	1.600	35'	E	17.00	

LOAD FACTORS:

DESIGN LOAD RATING FACTORS	LIMIT STATE	γDC	γDW
	STRENGTH I	1.25	1.50
	SERVICE III	1.00	1.00

NOTES:

MINIMUM RATING FACTORS ARE BASED ON THE STRENGTH I AND SERVICE III LIMIT STATES.

ALLOWABLE STRESSES FOR SERVICE III LIMIT STATE ARE AS REQUIRED FOR DESIGN.

COMMENTS:

1.

2.

3.

4.

CONTROLLING LOAD RATING
1 DESIGN LOAD RATING (HL-93)
2 DESIGN LOAD RATING (HS-20)
3 LEGAL LOAD RATING **
4 EMERGENCY VEHICLE LOAD RATING **
** SEE CHART FOR VEHICLE TYPE
GIRDER LOCATION
I - INTERIOR GIRDER
E - EXTERIOR GIRDER

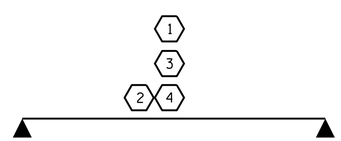

LRFR SUMMARY

FOR SPAN " A "

PROJECT NO. HB-0053

ASHE COUNTY

STATION: 12+21.00 -L-

SHEET 5 OF 6

STATE OF NORTH CAROLINA
DEPARTMENT OF TRANSPORTATION
RALEIGH

LRFR SUMMARY FOR 35' CORED SLAB UNIT 90° SKEW

(NON-INTERSTATE TRAFFIC)

NORTH CAROLINA PROFESSIONAL SEAL 037903 ENGINEER JEFFREY M KEPICH

Signed by: Jeffrey Kepich 7C5C71DBEF914E3... 6/12/2026

ms consultants, inc.
5444 Wade Park Blvd.
Suite 160
Raleigh, NC 27607
NC License Number : C-3239

DOCUMENT NOT CONSIDERED FINAL UNLESS ALL SIGNATURES COMPLETED

REVISIONS						SHEET NO.
NO.	BY:	DATE:	NO.	BY:	DATE:	S1-05
1			3			TOTAL SHEETS
2			4			23

DRAWN BY : J. KEPICH DATE : 12/25
CHECKED BY : B. LAWSON DATE : 02/26
DESIGN ENGINEER OF RECORD: J. KEPICH DATE : 02/26

6/2/2026
c:\workdir\ncdot-pw.bentley.com_ncdot-pw-01\jeffrey kepich\d0529525\401_009_HB0053_SMU_LRFR1_S1-05_040480.dgn
jkepich

Docusign Envelope ID: DA6AC54A-2325-88F7-839D-EF33E5ACDAC5

8/26/21

LOAD AND RESISTANCE FACTOR RATING (LRFR) SUMMARY FOR PRESTRESSED CONCRETE GIRDERS

LOAD TYPE		VEHICLE	WEIGHT (W) (TONS)	CONTROLLING LOAD RATING (#)	MINIMUM RATING FACTORS (RF)	TONS = W x RF	STRENGTH I LIMIT STATE											SERVICE III LIMIT STATE						COMMENT NUMBER
							LIVE-LOAD FACTORS (γ LL)	MOMENT					SHEAR					LIVE-LOAD FACTORS (γ LL)	MOMENT					
								DISTRIBUTION FACTORS (DF)	RATING FACTOR	SPAN	GIRDER LOCATION	DISTANCE FROM LEFT END OF SPAN (ft)	DISTRIBUTION FACTORS (DF)	RATING FACTOR	SPAN	GIRDER LOCATION	DISTANCE FROM LEFT END OF SPAN (ft)		DISTRIBUTION FACTORS (DF)	RATING FACTOR	SPAN	GIRDER LOCATION	DISTANCE FROM LEFT END OF SPAN (ft)	
DESIGN LOAD		HL-93 (INVENTORY)	N/A	1	1.600	--	1.75	0.25	1.600	40'	I	19.50	0.55	1.780	40'	E	35.50	0.80	0.25	1.610	40'	E	19.50	
		HL-93 (OPERATING)	N/A		2.070	--	1.35	0.25	2.070	40'	I	19.50	0.46	2.710	40'	I	35.50	N/A	--	-	--	--	-	
		HS-20 (INVENTORY)	36.000	2	2.000	72.15	1.75	0.25	2.000	40'	I	19.50	0.55	2.400	40'	E	35.50	0.80	0.25	2.010	40'	E	19.50	
		HS-20 (OPERATING)	36.000		2.600	93.53	1.35	0.25	2.600	40'	I	19.50	0.46	3.170	40'	I	35.50	N/A	--	-	--	--	-	
LEGAL LOAD	SINGLE VEHICLE (SV)	SNSH	13.500		3.720	50.25	1.40	0.25	4.630	40'	I	19.50	0.46	6.650	40'	I	35.50	0.80	0.25	3.720	40'	E	19.50	
		SNGARBS2	20.000		3.090	61.90	1.40	0.25	3.810	40'	I	15.50	0.46	4.930	40'	I	35.50	0.80	0.25	3.090	40'	E	19.50	
		SNAGRIS2	22.000		3.030	66.68	1.40	0.25	3.730	40'	I	15.50	0.46	4.660	40'	I	35.50	0.80	0.25	3.030	40'	E	19.50	
		SNCOTTS3	27.250		1.860	50.70	1.40	0.25	2.320	40'	I	19.50	0.46	3.250	40'	I	35.50	0.80	0.25	1.860	40'	E	19.50	
		SNAGGRS4	34.925		1.670	58.48	1.40	0.25	2.080	40'	I	19.50	0.46	2.850	40'	I	3.50	0.80	0.25	1.670	40'	E	19.50	
		SNS5A	35.550		1.630	57.90	1.40	0.25	2.030	40'	I	19.50	0.46	2.990	40'	I	3.50	0.80	0.25	1.630	40'	E	19.50	
		SNS6A	39.950		1.550	61.91	1.40	0.25	1.930	40'	I	19.50	0.46	2.800	40'	I	35.50	0.80	0.25	1.550	40'	E	19.50	
		SNS7B	42.000	3	1.480	62.07	1.40	0.25	1.840	40'	I	19.50	0.46	2.870	40'	I	35.50	0.80	0.25	1.480	40'	E	19.50	
	TRUCK TRACTOR SEMI-TRAILER (TTST)	TNAGRIT3	33.000		1.910	62.93	1.40	0.25	2.370	40'	I	19.50	0.46	3.300	40'	I	35.50	0.80	0.25	1.910	40'	E	19.50	
		TNT4A	33.075		1.930	63.88	1.40	0.25	2.400	40'	I	19.50	0.46	3.120	40'	I	3.50	0.80	0.25	1.930	40'	E	19.50	
		TNT6A	41.600		1.640	68.15	1.40	0.25	2.040	40'	I	19.50	0.46	3.070	40'	I	3.50	0.80	0.25	1.640	40'	E	19.50	
		TNT7A	42.000		1.680	70.54	1.40	0.25	2.090	40'	I	19.50	0.46	2.810	40'	I	35.50	0.80	0.25	1.680	40'	E	19.50	
		TNT7B	42.000		1.720	72.12	1.40	0.25	2.140	40'	I	19.50	0.46	2.710	40'	I	3.50	0.80	0.25	1.720	40'	E	19.50	
		TNAGRIT4	43.000		1.670	71.84	1.40	0.25	2.080	40'	I	19.50	0.46	2.590	40'	I	35.50	0.80	0.25	1.670	40'	E	19.50	
		TNAGT5A	45.000		1.550	69.57	1.40	0.25	1.920	40'	I	19.50	0.46	2.710	40'	I	35.50	0.80	0.25	1.550	40'	E	19.50	
		TNAGT5B	45.000		1.500	67.60	1.40	0.25	1.870	40'	I	19.50	0.46	2.440	40'	I	35.50	0.80	0.25	1.500	40'	E	19.50	
EMERGENCY VEHICLE (EV)		EV2	28.750		2.220	63.80	1.30	0.25	2.940	40'	I	15.50	0.46	3.710	40'	I	35.50	0.80	0.25	2.220	40'	E	15.50	
		EV3	43.000	4	1.420	61.24	1.30	0.25	1.910	40'	I	19.50	0.46	2.470	40'	I	35.50	0.80	0.25	1.420	40'	E	19.50	

LOAD FACTORS:

DESIGN LOAD RATING FACTORS	LIMIT STATE	γ DC	γ DW
	STRENGTH I	1.25	1.50
	SERVICE III	1.00	1.00

NOTES:

MINIMUM RATING FACTORS ARE BASED ON THE STRENGTH I AND SERVICE III LIMIT STATES.

ALLOWABLE STRESSES FOR SERVICE III LIMIT STATE ARE AS REQUIRED FOR DESIGN.

COMMENTS:

1.
2.
3.
4.

CONTROLLING LOAD RATING
1 DESIGN LOAD RATING (HL-93)
2 DESIGN LOAD RATING (HS-20)
3 LEGAL LOAD RATING **
4 EMERGENCY VEHICLE LOAD RATING **
** SEE CHART FOR VEHICLE TYPE
GIRDER LOCATION
I - INTERIOR GIRDER
E - EXTERIOR GIRDER

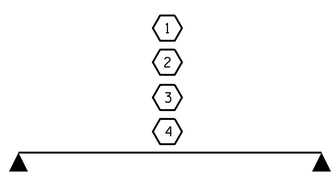

LRFR SUMMARY

FOR SPAN " B "

PROJECT NO. HB-0053

ASHE COUNTY

STATION: 12+21.00 -L-

SHEET 6 OF 6

STATE OF NORTH CAROLINA
DEPARTMENT OF TRANSPORTATION
RALEIGH

LRFR SUMMARY FOR 40' CORED SLAB UNIT 90° SKEW

(NON-INTERSTATE TRAFFIC)

NORTH CAROLINA PROFESSIONAL SEAL 037903 ENGINEER JEFFREY M. KEPICH

Signed by: Jeffrey Kepich 7C5C71DBEF914E3... 6/12/2026

ms consultants, inc.
5444 Wade Park Blvd.
Suite 160
Raleigh, NC 27607
NC License Number : C-3239

DOCUMENT NOT CONSIDERED FINAL UNLESS ALL SIGNATURES COMPLETED

REVISIONS						
NO.	BY:	DATE:	NO.	BY:	DATE:	
1			3			
2			4			

SHEET NO. S1-06

TOTAL SHEETS 23

DRAWN BY :	J. KEPICH	DATE :	12/25
CHECKED BY :	B. LAWSON	DATE :	02/26
DESIGN ENGINEER OF RECORD:	J. KEPICH	DATE :	02/26

6/22/2026
c:\workdir\ncdot-pw.bentley.com_ncdot-pw-01\jeffrey kepich\d0529525\401_011_HB0053_SMU_LRFR2_S1-06_040480.dgn
jkepich

Docusign Envelope ID: DA6AC54A-2325-88F7-839D-EF33E5ACDAC5

8/26/21

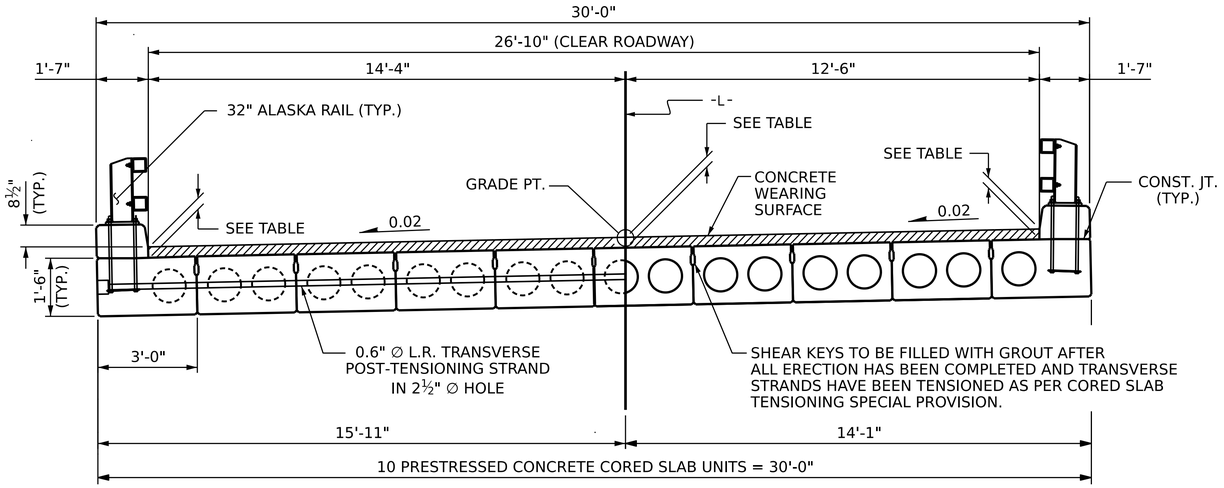

HALF SECTION
AT INTERMEDIATE DIAPHRAGMS

HALF SECTION
THROUGH VOIDS

TYPICAL SECTION

✱ - THE MAXIMUM CURB HEIGHT AND CONCRETE WEARING THICKNESS IS SHOWN. THE HEIGHT OF THE CURB AND CONCRETE WEARING THICKNESS VARIES WHILE THE TOP OF THE CURB FOLLOWS THE PROFILE OF THE GUTTERLINE. FOR CURB HEIGHT DETAILS AND CONCRETE WEARING THICKNESS SEE TABLE.

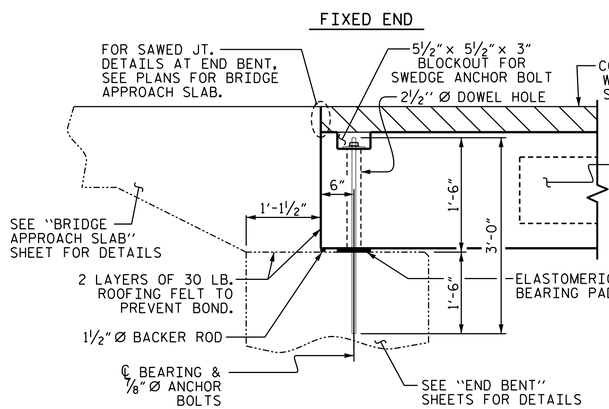

SECTION AT END BENT
(TYP. FOR ALL CORED SLABS)

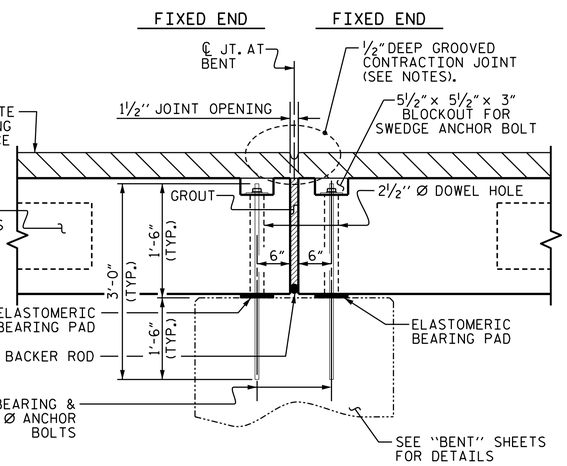

SECTION AT BENT
(TYP. FOR ALL CORED SLABS)

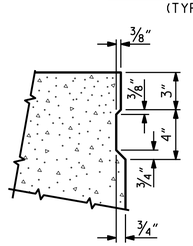

SHEAR KEY DETAIL

NOTE: OMIT SHEAR KEY ON OUTSIDE FACE OF EXTERIOR CORED SLABS.

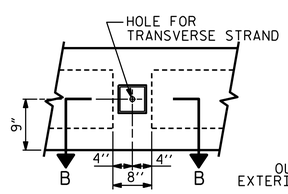

ELEVATION VIEW

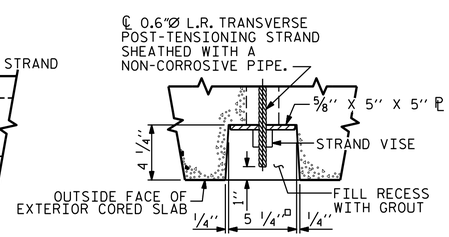

SECTION B-B

GROUTED RECESS AT END OF POST-TENSIONED STRAND OF CORED SLABS

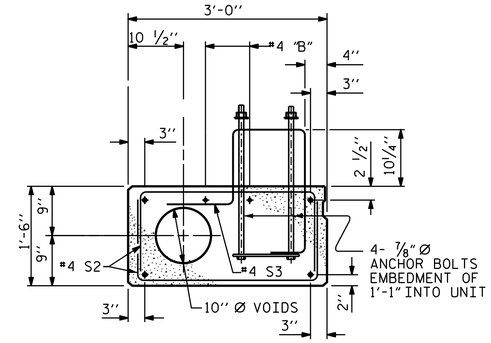

EXTERIOR SLAB SECTION

(FOR PRESTRESSED STRAND LAYOUT, SEE INTERIOR SLAB SECTION.)

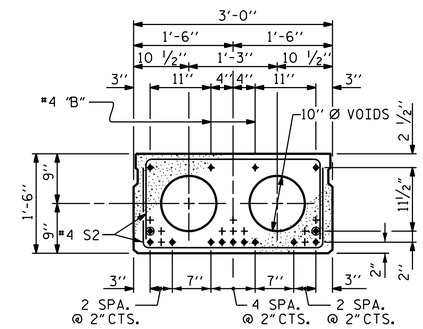

INTERIOR SLAB SECTION
(35' UNIT)

(11 STRANDS REQUIRED)

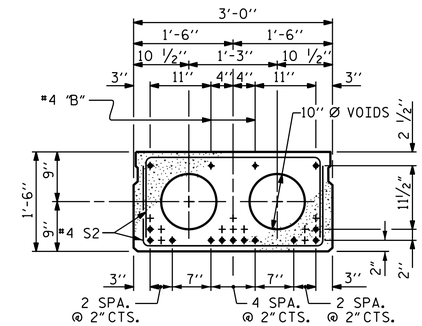

INTERIOR SLAB SECTION
(40' UNIT)

(13 STRANDS REQUIRED)

0.6" Ø LOW RELAXATION STRAND LAYOUT

SWEDGE ANCHOR BOLT NOTES

AT ALL ENDS OF CORED SLAB SECTIONS WITH HOLD-DOWN ANCHOR BOLTS, NUTS FOR ANCHOR BOLTS SHALL BE FINGER-TIGHTENED AND THEN BACKED OFF ½ TURN. THE THREAD OF THE NUT AND BOLT SHALL THEN BE BURRED WITH A SHARP POINTED TOOL.

THE 2½" Ø DOWEL HOLES AT FIXED ENDS OF CORED SLAB SECTIONS WITH HOLD-DOWN SWEDGE ANCHOR BOLTS SHALL BE FILLED WITH NON-SHRINK GROUT TO THE BOTTOM OF THE ANCHOR BOLT BLOCKOUT PRIOR TO INSTALLING THE ANCHOR PLATES, WASHERS, AND NUTS.

THE ANCHOR BOLT BLOCKOUTS IN CORED SLAB SECTIONS SHALL BE FILLED WITH NON-SHRINK GROUT PRIOR TO PLACEMENT OF THE WEARING SURFACE.

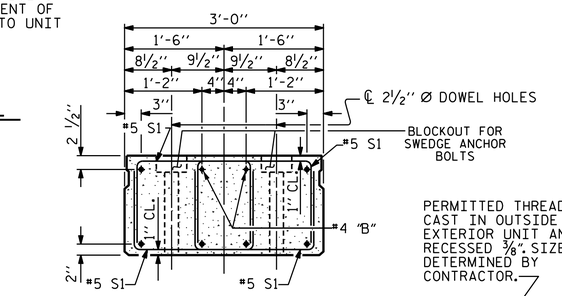

END ELEVATION

SHOWING PLACEMENT OF DOUBLE STIRRUPS AND LOCATION OF DOWEL HOLES. (STRAND LAYOUT NOT SHOWN.) EXTERIOR SLAB SECTION SHOWN-INTERIOR SLAB SECTION SIMILAR EXCEPT SHEAR KEY LOCATION.

PERMITTED THREADED INSERT CAST IN OUTSIDE FACE OF EXTERIOR UNIT AND RECESSED ⅜". SIZE TO BE DETERMINED BY CONTRACTOR.

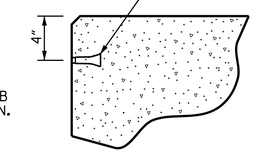

THREADED INSERT DETAIL

◉ OPTIONAL FULL LENGTH DEBONDED STRANDS. THESE STRANDS ARE NOT REQUIRED. IF THE FABRICATOR CHOOSES TO INCLUDE THESE STRANDS IN THE CORED SLAB UNIT, THE STRANDS SHALL BE DEBONDED FOR THE FULL LENGTH OF THE UNIT AT NO ADDITIONAL COST. SEE STANDARD SPECIFICATIONS, ARTICLE 1078-7.

DEBONDING LEGEND

CONCRETE WEARING SURFACE DEPTH		
SPAN	AT ℄ BEARINGS	AT MID-SPAN
A	4½"	3¾"
B	4½"	3 11/16"

PROJECT NO. HB-0053
ASHE COUNTY
STATION: 12+21.00 -L-

SHEET 1 OF 6

STATE OF NORTH CAROLINA
DEPARTMENT OF TRANSPORTATION
RALEIGH

3'-0" X 1'-6"
PRESTRESSED CONCRETE
CORED SLAB UNIT
90° SKEW

NORTH CAROLINA PROFESSIONAL SEAL 037903 ENGINEER JEFFREY M KEPICH
Signed by: Jeffrey Kepich 7C5C71DBEF914E3...
6/12/2026

ms consultants, inc.
5444 Wade Park Blvd.
Suite 160
Raleigh, NC 27607
NC License Number : C-3239

DOCUMENT NOT CONSIDERED FINAL UNLESS ALL SIGNATURES COMPLETED

REVISIONS						SHEET NO.
NO.	BY:	DATE:	NO.	BY:	DATE:	S1-07
1			3			TOTAL SHEETS
2			4			23

DRAWN BY : J. KEPICH DATE : 12/25
CHECKED BY : J. PAPCIAK DATE : 02/26
DESIGN ENGINEER OF RECORD: J. KEPICH DATE : 02/26

6/2/2026
c:\workdir\ncdot-pw.bentley.com_ncdot-pw-01\jeffrey kepich\d0529525\401_013_HB0053_SMU_TS_S1-07_040480.dgn
jkepich

Docusign Envelope ID: DA6AC54A-2325-88F7-839D-EF33E5ACDAC5

8/26/21

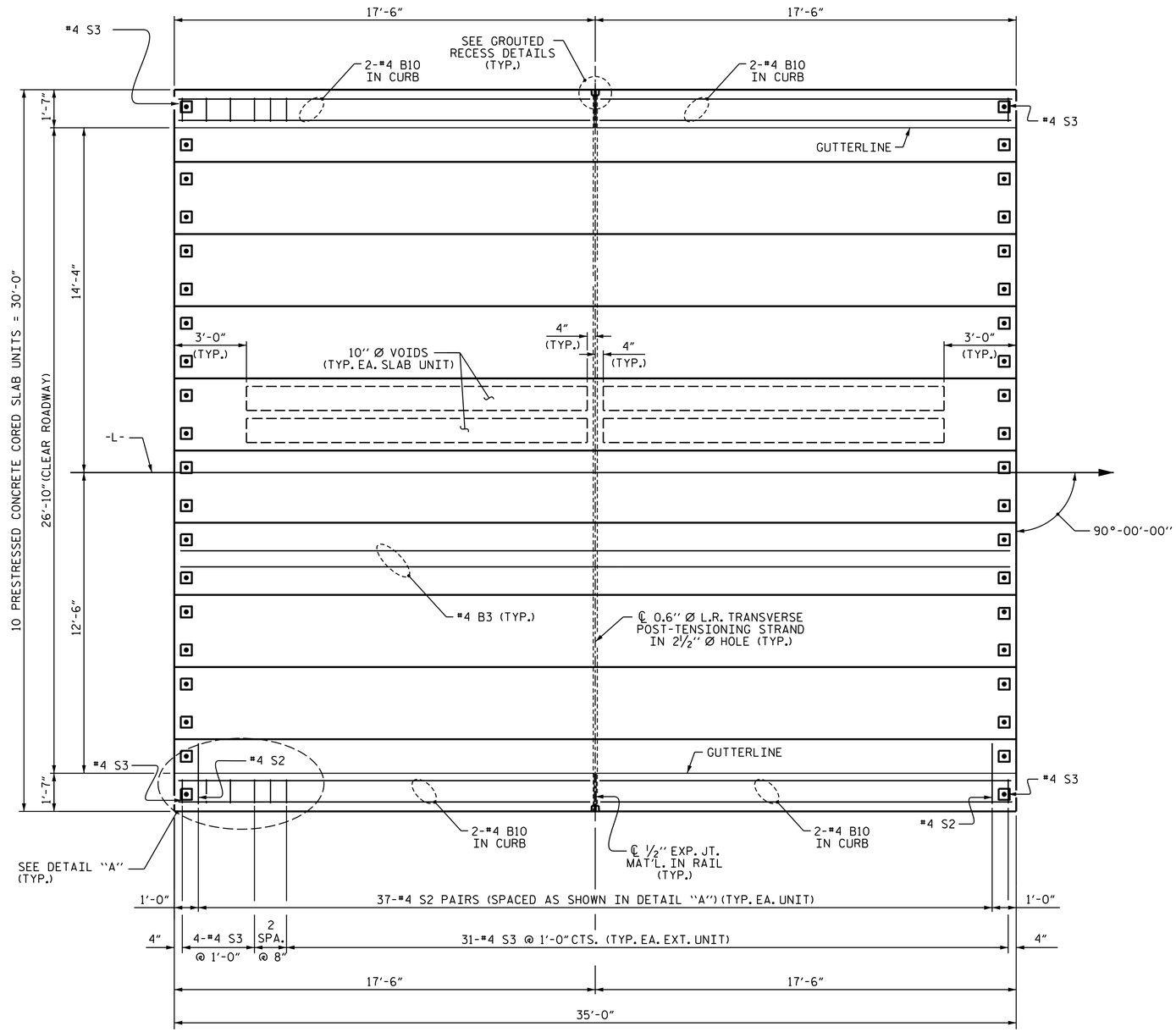

PLAN OF UNIT A

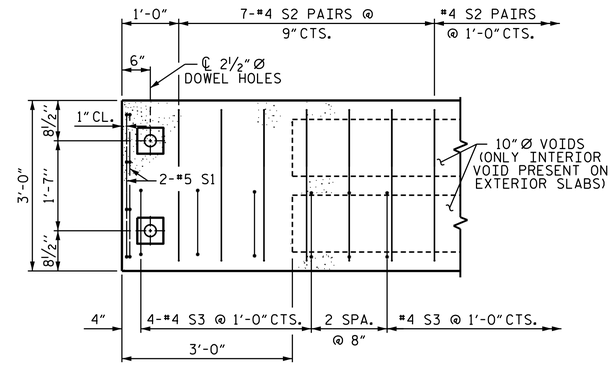

DETAIL "A"

(TYPICAL EACH END OF UNIT)
NOTE: EXTERIOR UNIT SHOWN - INTERIOR UNIT SIMILAR EXCEPT OMIT #4 S3 BARS.

NOTES

PROVIDE ADDITIONAL #4 S2 BARS AT EACH ALASKA RAIL POST.
SEE DETAIL "SIDE VIEW AT POST LOCATION" ON SHEET S1-11.

PROJECT NO. HB-0053
ASHE COUNTY
STATION: 12+21.00 -L-

SHEET 2 OF 6

STATE OF NORTH CAROLINA
DEPARTMENT OF TRANSPORTATION
RALEIGH

PLAN OF 35' UNIT 26'-10" CLEAR ROADWAY 90° SKEW

NORTH CAROLINA PROFESSIONAL SEAL 037903 ENGINEER JEFFREY M KEPICH

Signed by: Jeffrey Kepich 7C5C71DBEF914E3... 6/12/2026

ms consultants, inc.
5444 Wade Park Blvd.
Suite 160
Raleigh, NC 27607
NC License Number : C-3239

DOCUMENT NOT CONSIDERED FINAL UNLESS ALL SIGNATURES COMPLETED

REVISIONS						SHEET NO.
NO.	BY:	DATE:	NO.	BY:	DATE:	S1-08
1			3			TOTAL SHEETS
2			4			23

DRAWN BY : J. KEPICH DATE : 12/25
CHECKED BY : J. PAPCIAK DATE : 02/26
DESIGN ENGINEER OF RECORD: J. KEPICH DATE : 02/26

6/2/2026
c:\workdir\ncdot-pw.bentley.com_ncdot-pw-01\jeffrey kepich\d0529525\401_015_HB0053_SMU_SA_S1-08_040480.dgn
jkepich

Docusign Envelope ID: DA6AC54A-2325-88F7-839D-EF33E5ACDAC5

8/26/21

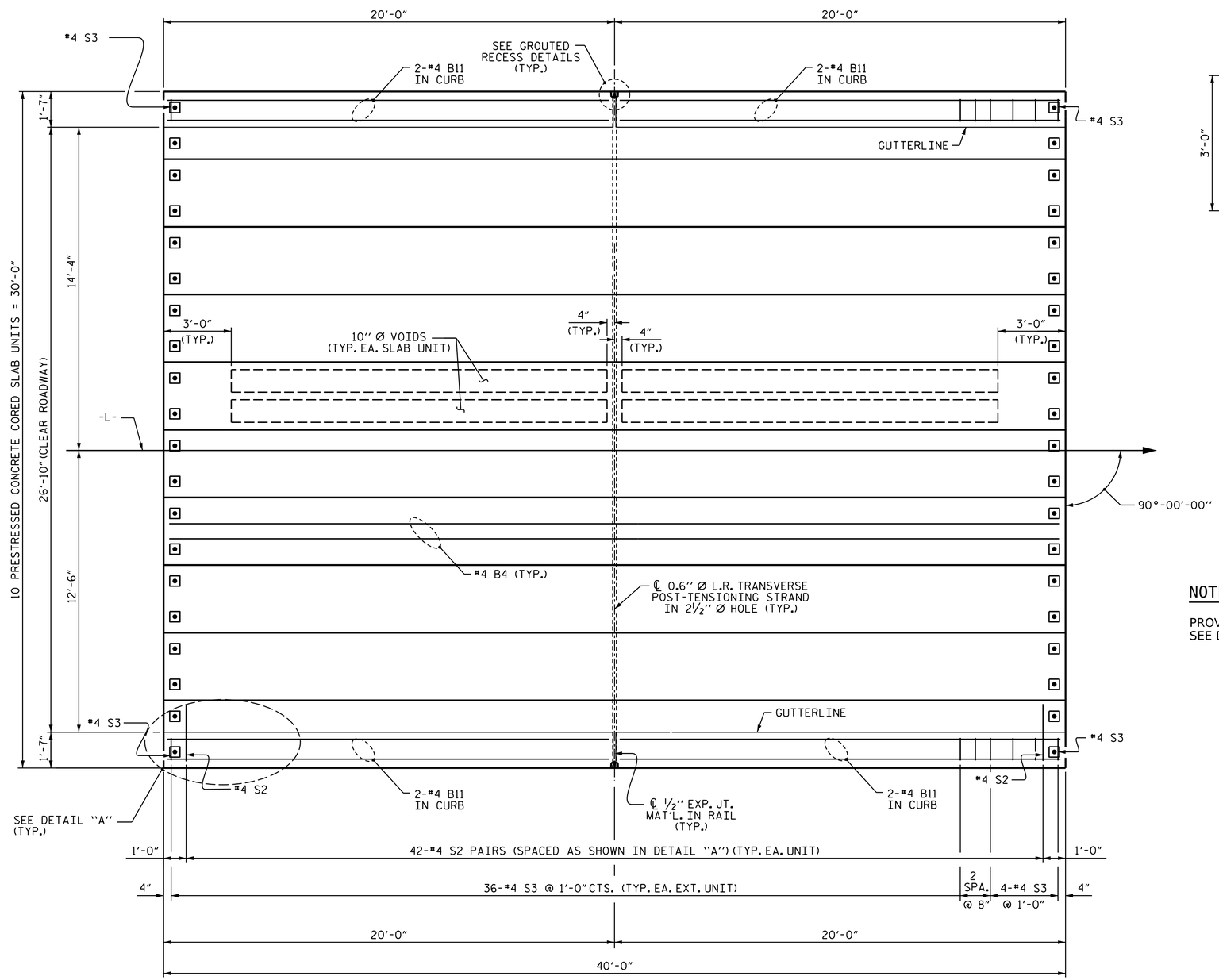

PLAN OF UNIT B

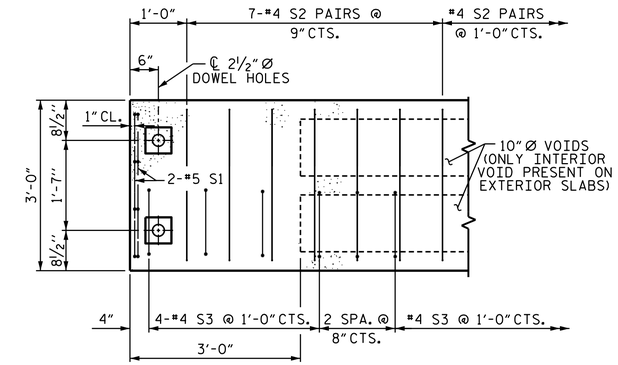

DETAIL "A"

(TYPICAL EACH END OF UNIT)
NOTE: EXTERIOR UNIT SHOWN - INTERIOR UNIT SIMILAR EXCEPT OMIT #4 S3 BARS.

NOTES

PROVIDE ADDITIONAL #4 S2 BARS AT EACH ALASKA RAIL POST.
SEE DETAIL "SIDE VIEW AT POST LOCATION" ON SHEET S1-11.

PROJECT NO. HB-0053
ASHE COUNTY
STATION: 12+21.00 -L-

SHEET 3 OF 6

STATE OF NORTH CAROLINA
DEPARTMENT OF TRANSPORTATION
RALEIGH

PLAN OF 40' UNIT 26'-10" CLEAR ROADWAY 90° SKEW

NORTH CAROLINA PROFESSIONAL SEAL 037903 ENGINEER JEFFREY M. KEPICH

Signed by: Jeffrey Kepich 7C5C71DBEF914E3... 6/12/2026

ms consultants, inc.
5444 Wade Park Blvd.
Suite 160
Raleigh, NC 27607
NC License Number : C-3239

DOCUMENT NOT CONSIDERED FINAL UNLESS ALL SIGNATURES COMPLETED

REVISIONS							
NO.	BY:	DATE:	NO.	BY:	DATE:	SHEET NO.	
1			3			S1-09	
2			4			TOTAL SHEETS	
						23	

DRAWN BY :	J. KEPICH	DATE :	12/25
CHECKED BY :	J. PAPCIAK	DATE :	02/26
DESIGN ENGINEER OF RECORD:	J. KEPICH	DATE :	02/26

6/2/2026
c:\workdir\ncdot-pw.bentley.com_ncdot-pw-01\jeffrey kepich\d0529525\401_017_HB0053_SMU_SB_S1-09_040480.dgn
jkepich

Docusign Envelope ID: DA6AC54A-2325-88F7-839D-EF33E5ACDAC5

8/26/21

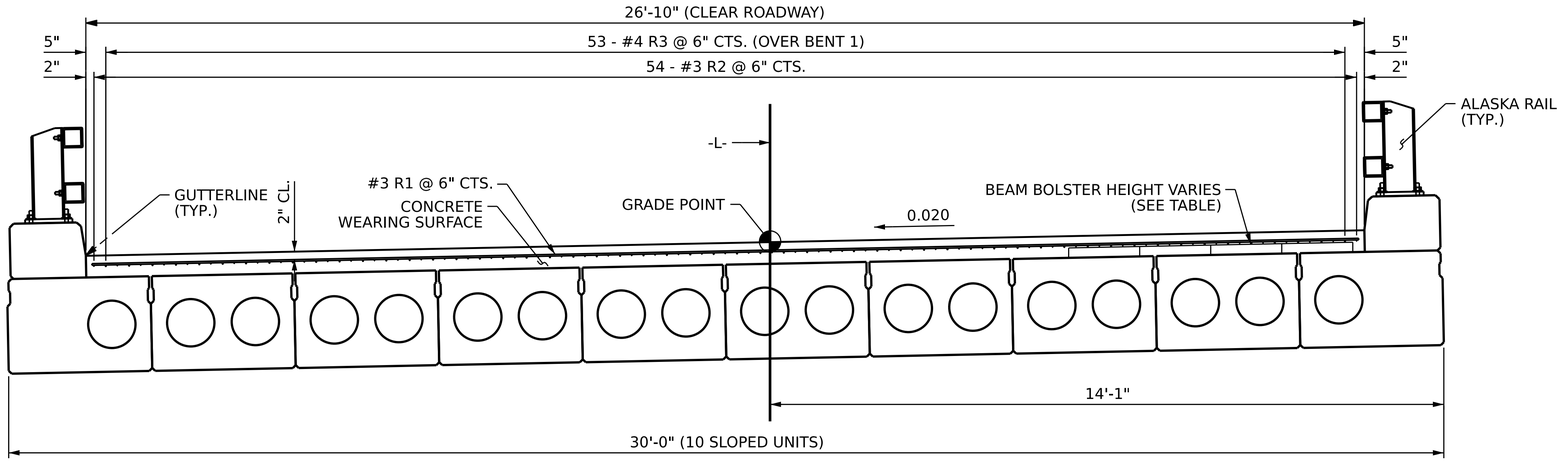

TYPICAL SECTION

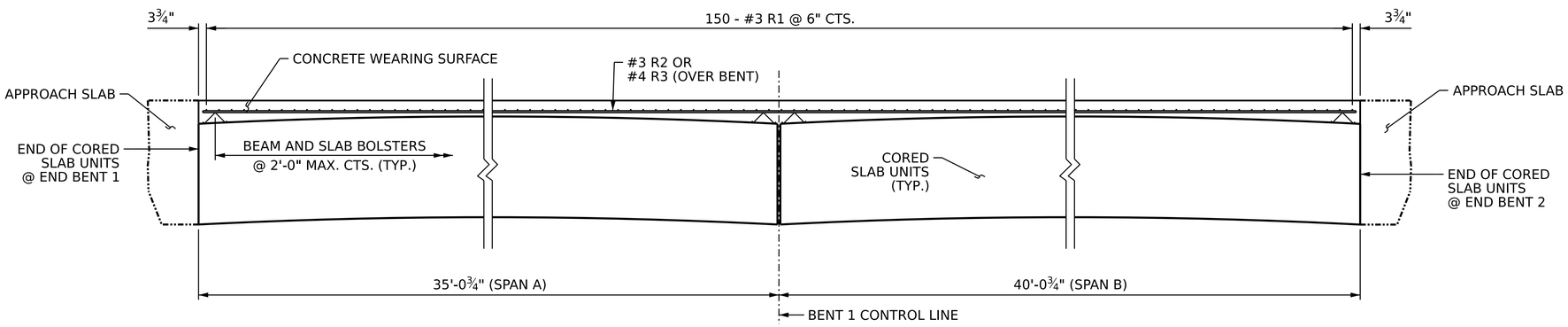

ELEVATION

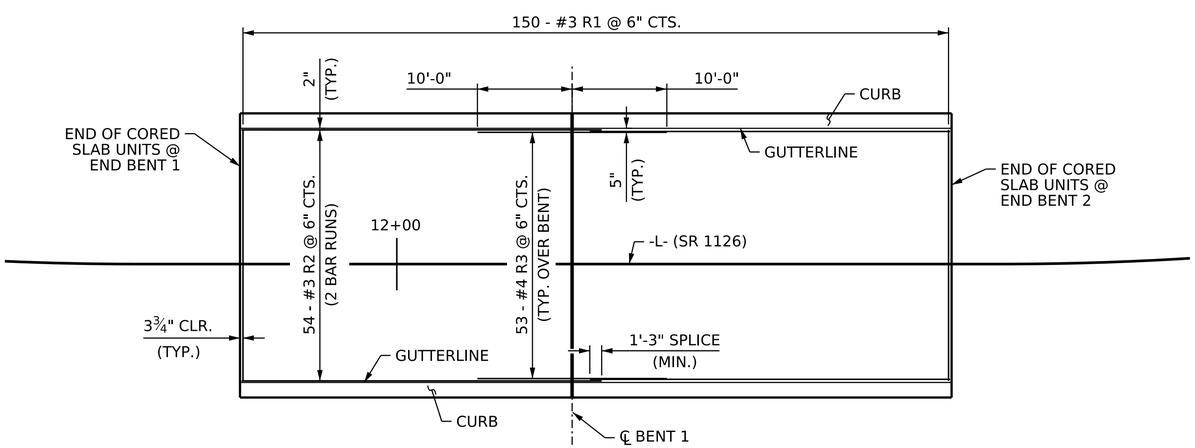

PLAN

NOTES

PLACEMENT OF THE CONCRETE WEARING SURFACE SHALL OCCUR AFTER CASTING THE CONCRETE RAIL. THE COST OF THE #3 BARS CAST WITH THE CONCRETE WEARING SURFACE SHALL BE INCLUDED IN THE UNIT PRICE BID FOR CONCRETE WEARING SURFACE. FOR CONCRETE WEARING SURFACE, SEE SPECIAL PROVISIONS.

ALL REINFORCING STEEL FOR THE CONCRETE WEARING SURFACE SHALL BE EPOXY COATED.

CONCRETE WEARING SURFACE BILL OF MATERIAL

BAR	NO.	SIZE	TYPE	LENGTH	WEIGHT
*R1	150	#3	STR	26'-6"	1495
*R2	108	#3	STR	38'-1"	1546
*R3	53	#4	STR	20'-0"	708
EPOXY COATED REINF. STEEL =					3749
CONCRETE WEARING SURFACE =					2016 SQ. FT.

SPLICE LENGTH CHART

BAR SIZE	EPOXY COATED
#3	1'-3"

BEAM BOLSTER HEIGHT

SPAN	AT ℄ BEARINGS		AT MID-SPAN
	NEAR	FAR	
A & B	2"	2"	¾" **

** USE SLAB BOLSTER

PROJECT NO. HB-0053

ASHE COUNTY

STATION: 12+21.00 -L-

SHEET 4 OF 6

STATE OF NORTH CAROLINA
DEPARTMENT OF TRANSPORTATION
RALEIGH

CONCRETE WEARING SURFACE DETAILS

NORTH CAROLINA PROFESSIONAL SEAL 037903 ENGINEER JEFFREY M KEPICH

Signed by: Jeffrey Kepich 7C5C71DBEF914E3... 6/12/2026

ms consultants, inc.
5444 Wade Park Blvd.
Suite 160
Raleigh, NC 27607
NC License Number : C-3239

DOCUMENT NOT CONSIDERED FINAL UNLESS ALL SIGNATURES COMPLETED

REVISIONS							SHEET NO.
NO.	BY:	DATE:	NO.	BY:	DATE:		S1-10
1			3				TOTAL SHEETS
2			4				23

DRAWN BY :	J. KEPICH	DATE :	12/25
CHECKED BY :	J. PAPCIAK	DATE :	02/26
DESIGN ENGINEER OF RECORD:	J. KEPICH	DATE :	02/26

6/2/2026
c:\workdir\ncdot-pw.bentley.com_ncdot-pw-01\jeffrey kepich\d0529525\401_019_HB0053_SMU_CWS_S1-10_040480.dgn
jkepich

Docusign Envelope ID: DA6AC54A-2325-88F7-839D-EF33E5ACDAC5

8/26/21

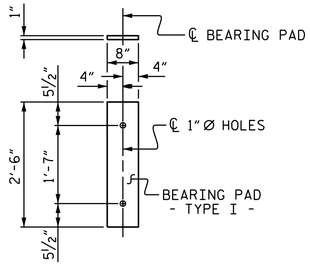

FIXED END
(TYPE I - 40 REQ'D)

ELASTOMERIC BEARING DETAILS

ELASTOMER IN ALL BEARINGS SHALL BE 50 DUROMETER HARDNESS.

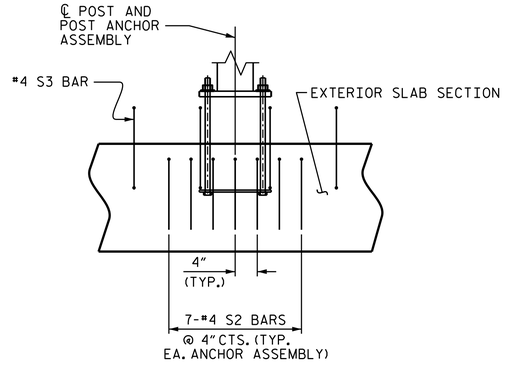

SIDE VIEW AT POST LOCATION

(SHOWING ADDITIONAL S2 BARS AT EACH POST ASSEMBLY)

BAR TYPES

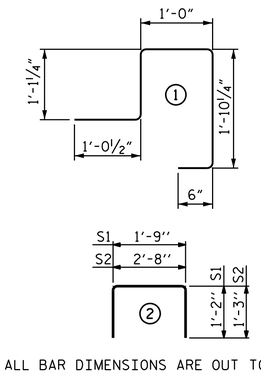

ALL BAR DIMENSIONS ARE OUT TO OUT

NOTES

ALL PRESTRESSING STRANDS SHALL BE 7-WIRE LOW RELAXATION GRADE 270 STRANDS AND SHALL CONFORM TO AASHTO M203 EXCEPT FOR SAMPLING REQUIREMENTS WHICH SHALL BE IN ACCORDANCE WITH THE STANDARD SPECIFICATIONS.

ALL REINFORCING STEEL CAST WITH THE CORED SLAB SECTIONS SHALL BE GRADE 60 AND SHALL BE INCLUDED IN THE UNIT PRICE BID FOR PRESTRESSED CONCRETE CORED SLABS.

RECESSES FOR TRANSVERSE STRANDS SHALL BE GROUTED AFTER THE TENSIONING OF THE STRANDS.

WHEN CORED SLABS ARE CAST, AN INTERNAL HOLD-DOWN SYSTEM SHALL BE EMPLOYED TO PREVENT VOIDS FROM RISING OR MOVING SIDEWAYS. AT LEAST SIX WEEKS PRIOR TO CASTING CORED SLABS, THE CONTRACTOR SHALL SUBMIT TO THE ENGINEER FOR REVIEW AND COMMENT, DETAILED DRAWINGS OF THE PROPOSED HOLD-DOWN SYSTEM. IN ADDITION TO STRUCTURAL DETAILS, LOCATION AND SPACING OF THE HOLD-DOWNS SHALL BE INDICATED.

WHEN A CONCRETE WEARING SURFACE IS DETAILED ON THE CORED SLAB BRIDGE TYPICAL SECTION, THE TOP SURFACE OF THE CORED SLAB UNITS SHALL HAVE A ⅜" RAKED FINISH.

THE TRANSFER OF LOAD FROM THE ANCHORAGES TO THE CORED SLAB UNIT SHALL BE DONE WHEN THE CONCRETE HAS REACHED A COMPRESSIVE STRENGTH OF NOT LESS THAN 4000 PSI.

ALL REINFORCING STEEL IN CURBS SHALL BE EPOXY COATED.

PRESTRESSING STRANDS SHALL BE CUT FLUSH WITH THE CORED SLAB UNIT ENDS.

APPLY EPOXY PROTECTIVE COATING TO CORED SLAB UNIT ENDS.

GROOVED CONTRACTION JOINTS, ½'' IN DEPTH, SHALL BE TOOLED IN ALL EXPOSED FACES OF THE CURB AND IN ACCORDANCE WITH ARTICLE 825-10(B) OF THE STANDARD SPECIFICATIONS. A CONTRACTION JOINT SHALL BE LOCATED AT EACH THIRD POINT BETWEEN CURB EXPANSION JOINTS. ONLY ONE CONTRACTION JOINT IS REQUIRED AT MIDPOINT OF CURB SEGMENTS LESS THAN 20 FEET IN LENGTH AND NO CONTRACTION JOINTS ARE REQUIRED FOR THOSE SEGMENTS LESS THAN 10 FEET IN LENGTH.

FLAME CUTTING OF THE TRANSVERSE POST-TENSIONING STRAND IS NOT ALLOWED.

MAINTAIN A SYMMETRIC TENSION FORCE BETWEEN EACH PAIR OF TRANSVERSE POST TENSIONING STRANDS IN THE DIAPHRAGM.

THE #4 S2 STIRRUPS MAY BE SHIFTED AS NECESSARY TO MAINTAIN 1" CLEAR TO THE GROUTED RECESS.

THE PERMITTED THREADED INSERTS ARE DETAILED AS AN OPTION FOR THE CONTRACTOR TO ATTACH FALSEWORK AND FORMWORK DURING CONSTRUCTION.

THE PERMITTED THREADED INSERTS IN THE EXTERIOR UNITS SHALL BE SIZED BY THE CONTRACTOR, SPACED AT 4'-0" CENTERS AND GALVANIZED IN ACCORDANCE WITH SECTION 1076 OF THE STANDARD SPECIFICATIONS. STAINLESS STEEL THREADED INSERTS MAY BE USED AS AN ALTERNATE.

THE PERMITTED THREADED INSERTS SHALL BE GROUTED BY THE CONTRACTOR IMMEDIATELY FOLLOWING REMOVAL OF THE FALSEWORK.

THE COST OF THE PERMITTED THREADED INSERTS SHALL BE INCLUDED IN THE PRICE BID FOR THE PRECAST UNITS.

THE COST OF THE METAL RAIL ANCHOR ASSEMBLY CAST WITH THE CORED SLAB SECTIONS SHALL BE INCLUDED IN THE PRICE BID FOR THE PRECAST UNITS.

THE 2½" Ø HOLES AT FIXED ENDS OF CORED SLAB SECTIONS WITH HOLD-DOWN ANCHOR BOLTS SHALL BE FILLED WITH NON-SHRINK GROUT TO THE BOTTOM OF THE ANCHOR BOLT BLOCKOUT PRIOR TO INSTALLING THE ANCHOR PLATES, WASHERS, AND NUTS.

THE ANCHOR BOLT BLOCKOUTS IN CORED SLAB SECTIONS SHALL BE FILLED WITH NON-SHRINK GROUT PRIOR TO PLACEMENT OF THE CONCRETE WEARING SURFACE.

BILL OF MATERIAL FOR ONE 35' CORED SLAB UNIT

				EXTERIOR UNIT		INTERIOR UNIT	
BAR	NUMBER	SIZE	TYPE	LENGTH	WEIGHT	LENGTH	WEIGHT
B3	2	#4	STR	34'-8"	46	34'-8"	46
S1	8	#5	2	4'-1"	34	4'-1"	34
S2	109	#4	2	5'-2"	376		
S2	74	#4	2			5'-2"	255
✱ S3	36	#4	1	5'-6"	132		
REINFORCING STEEL LBS.					456		335
✱ EPOXY COATED REINFORCING STEEL LBS.					132		
5000 P.S.I. CONCRETE CU. YDS.					5.2		4.6
0.6" Ø L.R. STRANDS No.					11		11

BILL OF MATERIAL FOR ONE 40' CORED SLAB UNIT

				EXTERIOR UNIT		INTERIOR UNIT	
BAR	NUMBER	SIZE	TYPE	LENGTH	WEIGHT	LENGTH	WEIGHT
B4	2	#4	STR	39'-8"	53	39'-8"	53
S1	8	#5	2	4'-1"	34	4'-1"	34
S2	119	#4	2	5'-2"	411		
S2	84	#4	2			5'-2"	290
✱ S3	41	#4	1	5'-6"	151		
REINFORCING STEEL LBS.					498		377
✱ EPOXY COATED REINFORCING STEEL LBS.					151		
5000 P.S.I. CONCRETE CU. YDS.					5.9		5.2
0.6" Ø L.R. STRANDS No.					13		13

CORED SLABS REQUIRED

	NUMBER	LENGTH	TOTAL LENGTH
35' UNIT			
EXTERIOR C.S.	2	35'-0"	70'-0"
INTERIOR C.S.	8	35'-0"	280'-0"
TOTAL	10		350'-0"
40' UNIT			
EXTERIOR C.S.	2	40'-0"	80'-0"
INTERIOR C.S.	8	40'-0"	320'-0"
TOTAL	10		400'-0"

CONCRETE RELEASE STRENGTH

UNIT	PSI
35' & 40' UNITS	4000

DEAD LOAD DEFLECTION AND CAMBER

	3'-0" x 1'-6"
35' CORED SLAB UNIT	0.6" Ø L.R. STRAND
CAMBER (SLAB ALONE IN PLACE)	11/16" ↑
DEFLECTION DUE TO SUPERIMPOSED DEAD LOAD✱✱	1/16" ↓
FINAL CAMBER	5/8" ↑
40' CORED SLAB UNIT	0.6" Ø L.R. STRAND
CAMBER (SLAB ALONE IN PLACE)	15/16" ↑
DEFLECTION DUE TO SUPERIMPOSED DEAD LOAD✱✱	1/8" ↓
FINAL CAMBER	13/16" ↑

✱✱ DOES NOT INCLUDE FUTURE WEARING SURFACE

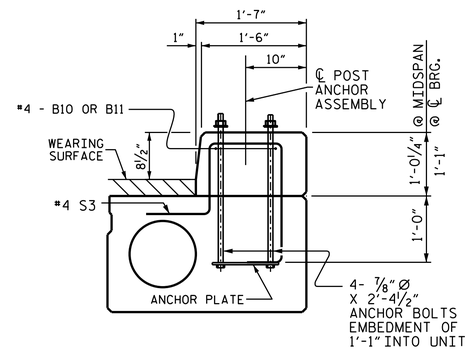

ALASKA RAIL CURB SECTION

GRADE 270 STRANDS

	0.6" Ø L.R.
AREA (SQUARE INCHES)	0.217
ULTIMATE STRENGTH (LBS. PER STRAND)	58,600
APPLIED PRESTRESS (LBS. PER STRAND)	43,950

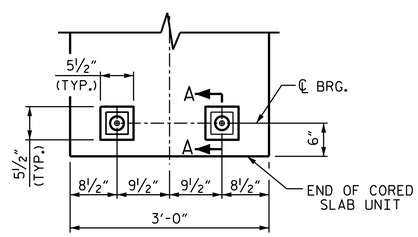

TYPICAL PLAN
(TYP. FOR ALL CORED SLABS)

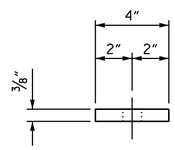

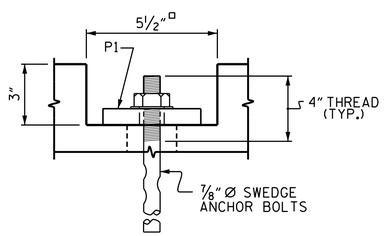

SECTION A-A
(FIXED)

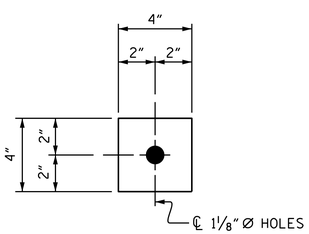

PLATE DETAILS - P1
(FIXED)
P1 (80 REQ'D.)

BLOCKOUT DETAIL FOR ANCHOR BOLTS
(TYP. FOR ALL CORED SLABS)

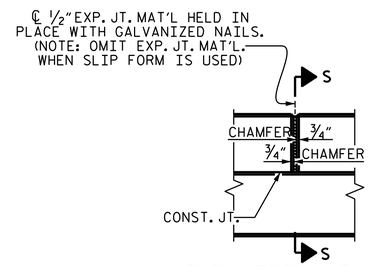

ELEVATION AT CURB
EXPANSION JOINTS

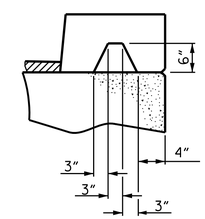

SECTION S-S
AT DAM IN OPEN JOINT
(THIS IS TO BE USED ONLY
WHEN SLIP FORM IS USED)

PROJECT NO. HB-0053
ASHE COUNTY
STATION: 12+21.00 -L-

SHEET 5 OF 6

STATE OF NORTH CAROLINA
DEPARTMENT OF TRANSPORTATION
RALEIGH

3'-0" x 1'-6" PRESTRESSED CONCRETE CORED SLAB UNIT 90° SKEW

NORTH CAROLINA PROFESSIONAL SEAL 037903 ENGINEER JEFFREY M. KEPICH
Signed by: Jeffrey Kepich 7C5C71DBEF914E3...
6/12/2026

ms consultants, inc.
5444 Wade Park Blvd.
Suite 160
Raleigh, NC 27607
NC License Number : C-3239

DOCUMENT NOT CONSIDERED FINAL UNLESS ALL SIGNATURES COMPLETED

REVISIONS						SHEET NO.
NO.	BY:	DATE:	NO.	BY:	DATE:	S1-11
1			3			TOTAL SHEETS
2			4			23

DRAWN BY : J. KEPICH DATE : 12/25
CHECKED BY : J. PAPCIAK DATE : 02/26
DESIGN ENGINEER OF RECORD: J. KEPICH DATE : 02/26

6/22/2026
c:\workdir\ncdot-pw.bentley.com_ncdot-pw-01\jeffrey kepich\d0529525\401_021_HB0053_SMU_CS1_S1-11_040480.dgn
jkepich

Docusign Envelope ID: DA6AC54A-2325-88F7-839D-EF33E5ACDAC5

8/26/21

BILL OF MATERIAL FOR CURB & END POSTS

BAR	NO.	SIZE	TYPE	LENGTH	WEIGHT
✳ B10	8	#4	STR	17'-1"	91
✳ B11	8	#4	STR	19'-7"	105
✳ E1	40	#7	STR	3'-1"	252
✳ F1	32	#6	STR	3'-6"	168

✳ EPOXY COATED REINFORCING STEEL	616 LBS.
CLASS AA CONCRETE	9.7 CU.YDS.
TOTAL CONCRETE CURB	150.25 LIN. FT.

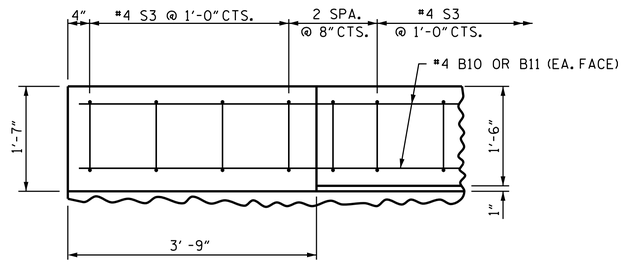

PLAN OF CURB

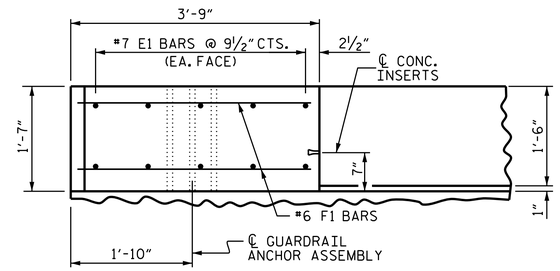

PLAN OF END POST

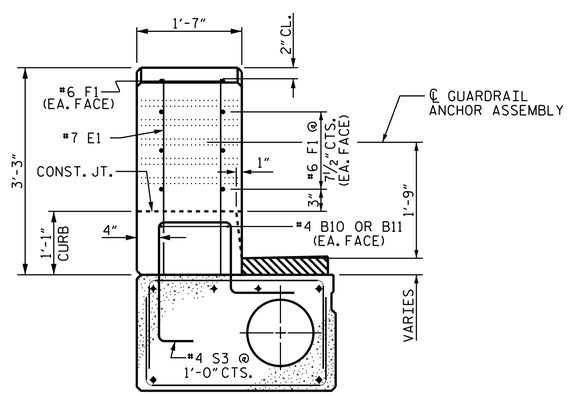

END VIEW

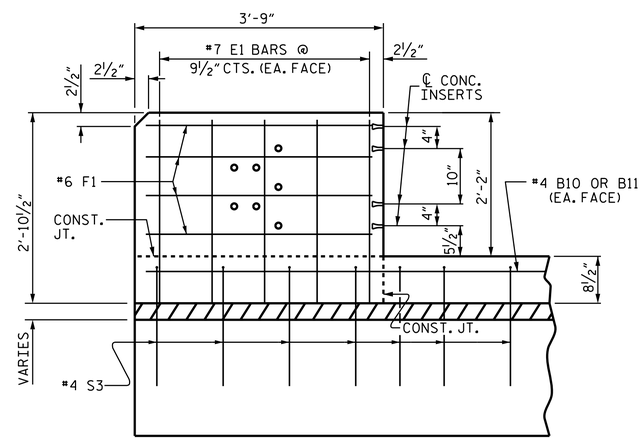

ELEVATION

CURB AND END POST FOR 32" ALASKA RAIL

PROJECT NO. HB-0053

ASHE COUNTY

STATION: 12+21.00 -L-

SHEET 6 OF 6

STATE OF NORTH CAROLINA
DEPARTMENT OF TRANSPORTATION
RALEIGH

CONCRETE CURBS AND END POSTS

NORTH CAROLINA PROFESSIONAL SEAL 037903 ENGINEER JEFFREY M KEPICH

Signed by: Jeffrey Kepich 7C5C71DBEF914E3... 6/12/2026

ms consultants, inc.
5444 Wade Park Blvd.
Suite 160
Raleigh, NC 27607
NC License Number : C-3239

DOCUMENT NOT CONSIDERED FINAL UNLESS ALL SIGNATURES COMPLETED

REVISIONS							SHEET NO.
NO.	BY:	DATE:	NO.	BY:	DATE:		S1-12
1			3				TOTAL SHEETS
2			4				23

ASSEMBLED BY:	J. KEPICH		DATE :	12/2025
CHECKED BY :	J. PAPCIAK		DATE :	02/2026
DRAWN BY :	WJH	4/89	REV. 1/15	RWW/TMC
CHECKED BY :	FCJ	5/89	REV. 12/17	MAA/THC
			REV. 5/18	MAA/THC

6/2/2026
c:\workdir\ncdot-pw.bentley.com_ncdot-pw-01\jeffrey kepich\d0529525\401_023_HB0053_SMU_CS2_S1-12_040480.dgn
jkepich

Docusign Envelope ID: DA6AC54A-2325-88F7-839D-EF33E5ACDAC5

8/26/21

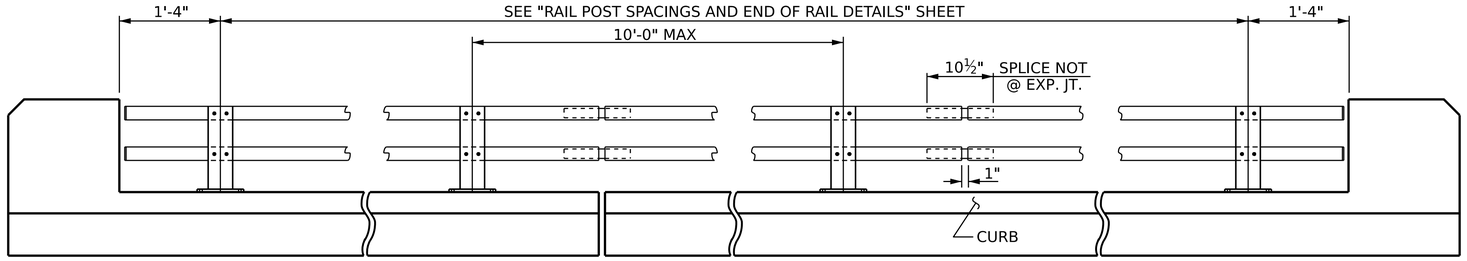

ELEVATION

NOTE : FOR ATTACHMENT OF METAL RAIL TO END POST, SEE STANDARD NO. BMR9.

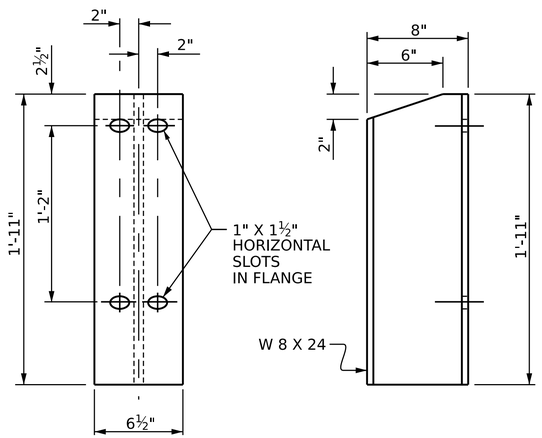

FRONT ELEVATION

SIDE ELEVATION

DETAILS OF POST

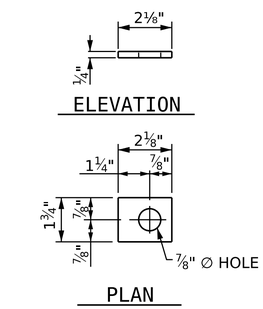

PLATE WASHER

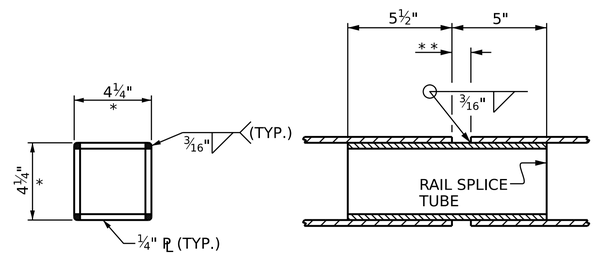

RAIL SPLICE DETAILS

* - DIMENSION AFTER GRINDING RADIUS ON CORNERS TO MATCH INSIDE OF METAL RAIL. GRIND ALL EDGES PRIOR TO GALVANIZING TO ASSURE FIT.

* * -1" FOR SPLICE NOT AT EXPANSION JOINT.

NOTES

METAL RAIL SHALL BE GALVANIZED STEEL IN ACCORDANCE WITH THE REQUIREMENTS OF THE GENERAL NOTES AND THE FOLLOWING SPECIFICATIONS. ALUMINUM RAIL WILL NOT BE AN OPTION.

GALVANIZED STEEL RAILS

MATERIAL AND GALVANIZING ARE TO CONFORM TO THE FOLLOWING SPECIFICATIONS:

POST, POST BASES, ANCHOR PLATES AND RAIL SPLICE TUBES: ASTM A36 GRADE 36 STRUCTURAL STEEL-GALVANIZED TO ASTM A123.

THE CUT ENDS OF GALVANIZED STEEL RAILING, AFTER GRINDING SMOOTH SHALL BE GIVEN TWO COATS OF ZINC RICH PAINT MEETING THE REQUIREMENTS OF FEDERAL SPECIFICATION MIL-P-26915 USAF TYPE 1, OR OF FEDERAL SPECIFICATIONS TT-P-641.

RAILS: ASTM A500 GRADE B - GALVANIZED TO ASTM A123.

WELDED RAIL STUDS: ASTM A108-GALVANIZED TO ASTM A123.

HIGH STRENGTH ANCHOR BOLTS SHALL CONFORM TO ASTM F1554 GRADE 105. HEAVY HEX NUTS SHALL CONFORM TO ASTM A563 DH, AND WASHERS TO ASTM F436,TYPE 1. ANCHOR BOLTS, NUTS AND WASHERS SHALL BE GALVANIZED TO ASTM A123.

GENERAL NOTES

RAILING SHALL BE CONTINUOUS FROM END POST TO END POST OF BRIDGE. EACH JOINT IN RAIL LENGTH SHALL BE SPLICED AS DETAILED. PANEL LENGTHS OF RAIL SHALL BE ATTACHED TO A MINIMUM OF THREE POSTS.

FOR END OF RAIL TO CLEAR FACE OF CONCRETE END POST DIMENSION, SEE STANDARD NO. BMR9.

CERTIFIED MILL REPORTS ARE REQUIRED FOR RAILS AND POSTS. SHOP INSPECTION IS NOT REQUIRED.

METAL RAIL POSTS SHALL BE SET NORMAL TO CURB GRADE.

CURVED RAIL USAGE: WHERE RAILS ARE TO BE USED ON BRIDGES ON HORIZONTAL AND/OR VERTICAL CURVATURE THE CONTRACTOR MAY, AT HIS OPTION, HAVE THE REQUIRED CURVATURE IN THE RAIL FORMED IN THE SHOP OR IN THE FIELD. IN EITHER EVENT, THE RAIL SHALL CONFORM WITHOUT BUCKLING OR KINKING TO THE REQUIRED CURVATURE IN A UNIFORM MANNER ACCEPTABLE TO THE ENGINEER.

TO INSURE FUTURE IDENTIFICATION OF THE FABRICATOR, A PERMANENT IDENTIFYING MARK SHALL BE PLACED ON EACH POST. THE METHOD OF MARKING AND LOCATION SHALL BE SUCH THAT IT DOES NOT DETRACT FROM THE APPEARANCE OF THE POST, BUT REMAINS VISIBLE AFTER RAIL PLACEMENT.

SHIMS SHALL BE USED AS NECESSARY FOR POST ALIGNMENT.

GROOVED CONTRACTION JOINTS,½" IN DEPTH, SHALL BE TOOLED IN ALL EXPOSED FACES OF THE CURB AND IN ACCORDANCE WITH ARTICLE 825-10(B) OF THE STANDARD SPECIFICATIONS. A CONTRACTION JOINT SHALL BE LOCATED AT EACH THIRD POINT BETWEEN CURB EXPANSION JOINTS. ONLY ONE CONTRACTION JOINT IS REQUIRED AT MIDPOINT OF CURB SEGMENTS LESS THAN 20 FEET IN LENGTH AND NO CONTRACTION JOINTS ARE REQUIRED FOR THOSE SEGMENTS LESS THAN 10 FEET IN LENGTH.

THE RAIL SECTIONS SHALL BE ATTACHED TO THE POSTS BY TWO THREADED ¾" ∅ WELDED STUDS, PLATE WASHERS, LOCKWASHERS, AND NUTS.

FOR 32" ALASKA RAIL, SEE THE STANDARD SPECIFICATIONS.

METAL RAIL LENGTH 135.25 LIN. FT.

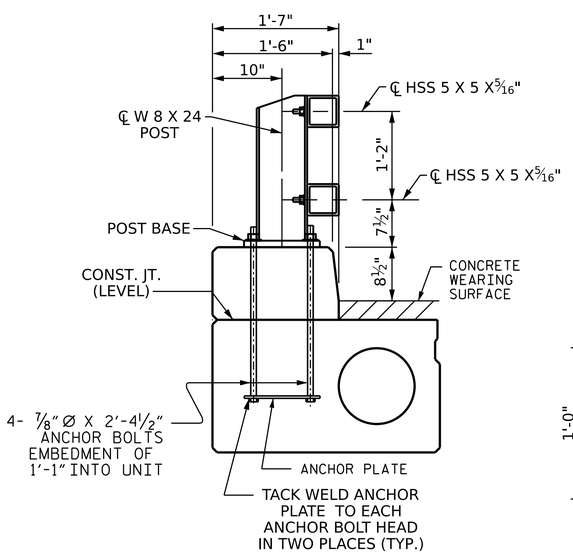

SECTION THUR RAIL

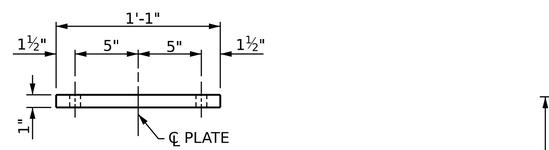

FRONT ELEVATION

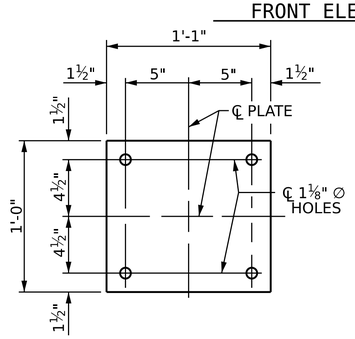

PLAN

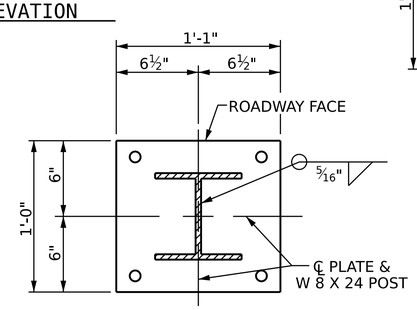

POST ATTACHMENT DETAIL

POST BASE DETAILS

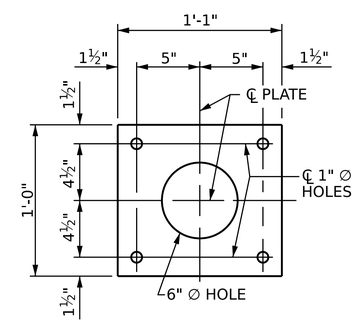

PLAN

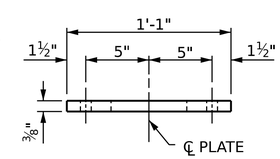

ELEVATION

ANCHOR PLATE DETAILS

PROJECT NO. HB-0053

ASHE COUNTY

STATION: 12+21.00 -L-

SHEET 1 OF 3

STATE OF NORTH CAROLINA
DEPARTMENT OF TRANSPORTATION
RALEIGH

32" ALASKA RAIL

NORTH CAROLINA PROFESSIONAL SEAL 037903 ENGINEER JEFFREY M. KEPICH

Signed by: Jeffrey Kepich 7C5C71DBEF914E3... 6/12/2026

ms consultants, inc.
5444 Wade Park Blvd.
Suite 160
Raleigh, NC 27607
NC License Number : C-3239

DOCUMENT NOT CONSIDERED FINAL UNLESS ALL SIGNATURES COMPLETED

REVISIONS								SHEET NO.
NO.	BY:	DATE:	NO.	BY:	DATE:			S1-13
1			3					TOTAL SHEETS
2			4					23

ASSEMBLED BY:	J. KEPICH		DATE :	12/25	
CHECKED BY :	J. PAPCIAK		DATE :	02/26	
DRAWN BY :	RWW	7/14	REV. 12/17	MAA/THC	
CHECKED BY :	TMG	7/14	REV. 5/18	MAA/THC	
			REV. 10/23	BNB/SNM	

6/2/2026
c:\workdir\ncdot-pw.bentley.com_ncdot-pw-01\jeffrey kepich\d0529525\401_025_HB0053_SMU_ARI_S1-13_040480.dgn
jkepich

Docusign Envelope ID: DA6AC54A-2325-88F7-839D-EF33E5ACDAC5

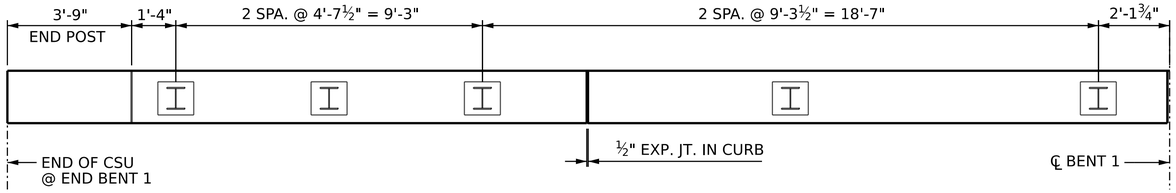

SPAN A

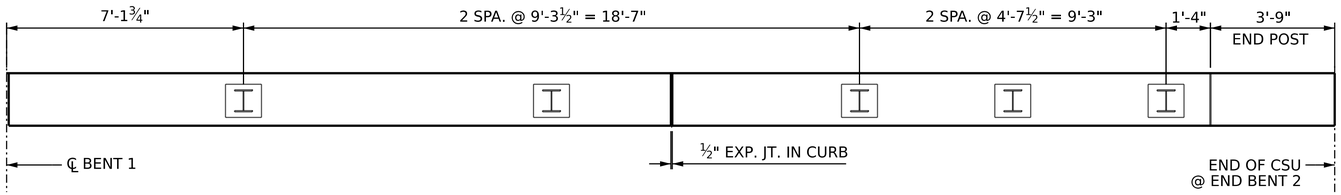

SPAN B

PLAN OF RAIL POST SPACINGS

(LEFT RAIL SHOWN, RIGHT RAIL SIMILAR)

NOTES

STRUCTURAL CONCRETE INSERT

EACH STRUCTURAL CONCRETE INSERT ASSEMBLY SHALL CONSIST OF THE FOLLOWING COMPONENTS:

A. FERRULE SHALL BE MADE FROM STEEL MEETING THE REQUIREMENTS OF AASHTO M169, GRADE 12L14 AND SHALL HAVE A MINIMUM LENGTH OF THREADS OF 1½".

B. 1 - ¾" ∅ x 1⅝" BOLT WITH WASHER. BOLT SHALL CONFORM TO THE REQUIREMENTS OF ASTM A307. BOLT AND WASHER SHALL BE GALVANIZED. (AT THE CONTRACTOR'S OPTION, STAINLESS STEEL BOLT AND WASHER MAY BE USED AS AN ALTERNATE FOR THE ¾" ∅ x 1⅝" GALVANIZED BOLT AND WASHER. THEY SHALL CONFORM TO OR EXCEED THE MECHANICAL REQUIREMENTS OF ASTM A307. THE USE OF THIS ALTERNATE SHALL BE APPROVED BY THE ENGINEER.)

C. WIRE STRUT SHOWN IN THE STRUCTURAL CONCRETE INSERT DETAIL IS THE MINIMUM ALLOWABLE SIZE AND SHALL HAVE A MINIMUM TENSILE STRENGTH OF 100,000 PSI. AS AN OPTION, A 7/16" ∅ WIRE STRUT WITH A MINIMUM TENSILE STRENGTH OF 90,000 PSI IS ACCEPTABLE.

NOTES

METAL RAIL TO END POST CONNECTION

EACH METAL RAIL TO END POST CONNECTION SHALL CONSIST OF THE FOLLOWING COMPONENTS:

A. ½" METAL BRACKET PLATE AND ¼" METAL RAIL INSERT TUBE SHALL CONFORM TO AASHTO ASTM A36 GRADE 36 AND SHALL BE GALVANIZED AFTER FABRICATION TO ASTM A123.

B. ¾" STRUCTURAL CONCRETE INSERTS SHALL HAVE A WORKING LOAD SHEAR CAPACITY OF 4800 LBS. THE FERRULES SHALL ENGAGE A ¾" ∅ x 1⅝" BOLT WITH 2'' O.D. WASHER IN PLACE. THE ¾" ∅ x 1⅝" BOLT SHALL HAVE N. C. THREADS.

THE ¾" STRUCTURAL CONCRETE INSERTS WITH BOLTS SHALL BE ASSEMBLED IN THE SHOP.

THE COST OF THE ¾" STRUCTURAL CONCRETE INSERT, THE ½" BRACKET PLATES, AND THE RAIL INSERT TUBES COMPLETE IN PLACE SHALL BE INCLUDED IN THE VARIOUS PAY ITEMS.

THE CONTRACTOR, AT HIS OPTION, MAY USE AN ADHESIVE BONDING SYSTEM IN LIEU OF THE STRUCTURAL CONCRETE INSERT EMBEDDED IN THE END POST. IF THE ADHESIVE BONDING SYSTEM IS USED, THE ¾" ∅ x 1⅝" BOLTS WITH WASHERS SHALL BE REPLACED WITH ¾" ∅ x 6½" BOLTS AND 2'' O.D. WASHERS. ALL SPECIFICATIONS THAT APPLY TO THE ¾" ∅ x 1⅝" BOLTS SHALL APPLY TO THE ¾" ∅ x 6½" BOLTS. FIELD TESTING OF THE ADHESIVE BONDING SYSTEM IS NOT REQUIRED.

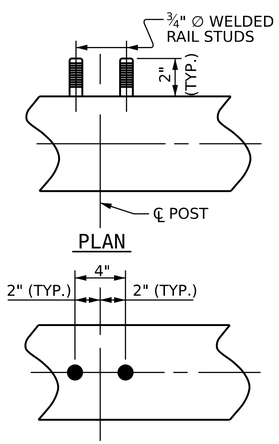

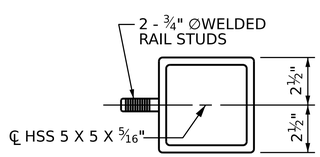

RAIL SECTION

RAIL STUD DETAILS

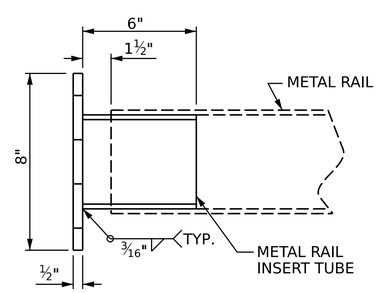

METAL RAIL ATTACHMENT BRACKET

THE METAL RAIL INSERT TUBE SHALL BE FABRICATED FROM ¼" PLATES.

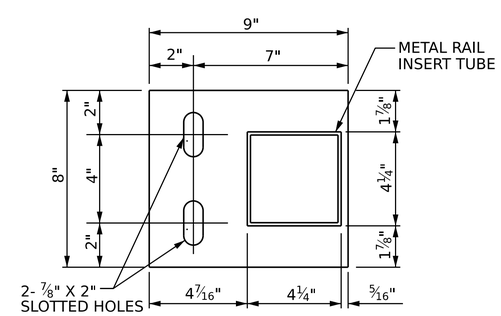

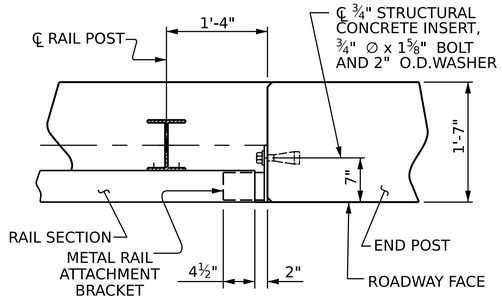

PLAN - RAILS AND END POST

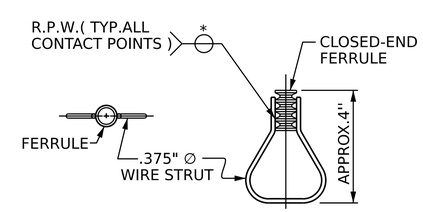

STRUCTURAL CONCRETE INSERT

* EACH WELDED ATTACHMENT OF WIRE TO FERRULE SHALL DEVELOP THE TENSILE STRENGTH OF THE WIRE.

PROJECT NO. HB-0053

ASHE COUNTY

STATION: 12+21.00 -L-

SHEET 2 OF 3

STATE OF NORTH CAROLINA
DEPARTMENT OF TRANSPORTATION
RALEIGH

STANDARD

RAIL POST SPACINGS AND END OF RAIL DETAILS

FOR 32" ALASKA RAIL

NORTH CAROLINA PROFESSIONAL SEAL 037903 ENGINEER JEFFREY M. KEPICH

Signed by: Jeffrey Kepich 7C5C71DBEF914E3... 6/12/2026

ms consultants, inc.
5444 Wade Park Blvd.
Suite 160
Raleigh, NC 27607
NC License Number : C-3239

DOCUMENT NOT CONSIDERED FINAL UNLESS ALL SIGNATURES COMPLETED

ASSEMBLED BY:	J. KEPICH	DATE :	01/2026
CHECKED BY :	J. PAPCIAK	DATE :	02/2026
DRAWN BY :	RWW 7/14	REV. 12/17	MAA/THC
CHECKED BY :	TMG 7/14	REV. 5/18	MAA/THC
		REV. 10/23	BNB/SNM

REVISIONS								SHEET NO.
NO.	BY:	DATE:	NO.	BY:	DATE:			S1-14
1			3					TOTAL SHEETS
2			4					23

6/2/2026
c:\workdir\ncdot-pw.bentley.com_ncdot-pw-01\jeffrey kepich\d0529525\401_027_HB0053_SMU_AR2_S1-14_040480.dgn
jkepich

Docusign Envelope ID: DA6AC54A-2325-88F7-839D-EF33E5ACDAC5

8/26/21

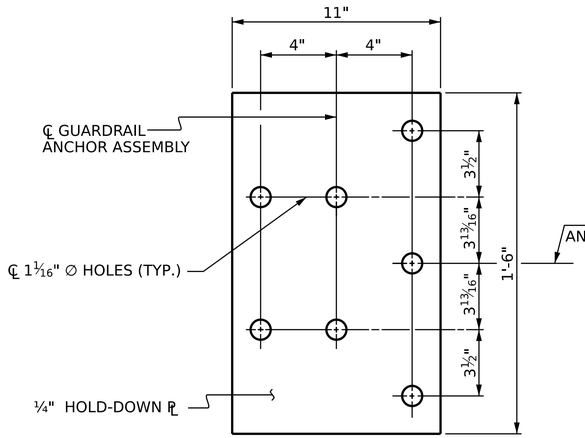

PLAN

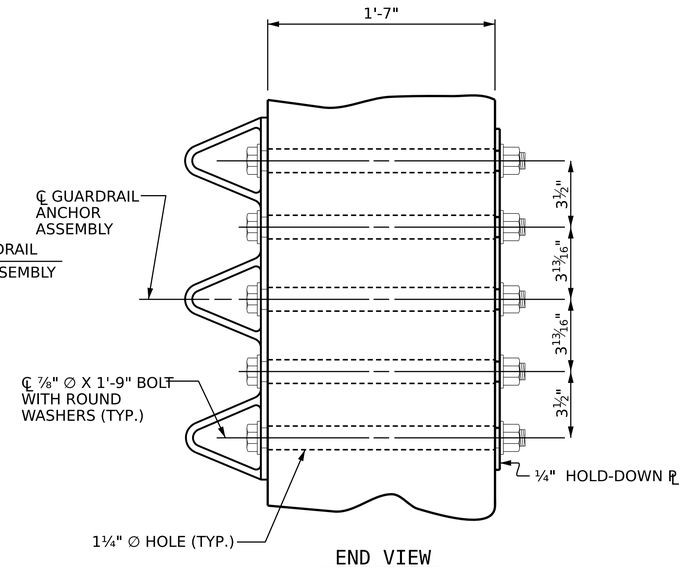

END VIEW

GUARDRAIL ANCHOR ASSEMBLY DETAILS

NOTES

THE GUARDRAIL ANCHOR ASSEMBLY SHALL CONSIST OF A ¼" HOLD DOWN PLATE AND 7 - ⅞" ∅ BOLTS WITH NUTS AND WASHERS.

THE HOLD-DOWN PLATE SHALL CONFORM TO AASHTO M270 GRADE 36. AFTER FABRICATION, THE HOLD-DOWN PLATE SHALL BE HOT-DIP GALVANIZED IN ACCORDANCE WITH AASHTO M111.

BOLTS SHALL CONFORM TO THE REQUIREMENTS OF ASTM A307 AND NUTS SHALL CONFORM TO THE REQUIREMENTS OF AASHTO M291. BOLTS, NUTS AND WASHERS SHALL BE GALVANIZED. AT THE CONTRACTOR'S OPTION, STAINLESS STEEL BOLTS, NUTS AND WASHERS MAY BE USED AS AN ALTERNATE FOR THE ⅞" ∅ GALVANIZED BOLTS, NUTS AND WASHERS. THEY SHALL CONFORM TO OR EXCEED THE MECHANICAL REQUIREMENTS OF ASTM A307. THE USE OF THIS ALTERNATE SHALL BE APPROVED BY THE ENGINEER.

THE GUARDRAIL ANCHOR ASSEMBLY IS REQUIRED AT ALL POINTS WHERE APPROACH GUARDRAIL IS TO BE ATTACHED TO THE END OF THE PARAPET. FOR POINTS OF ATTACHMENT, SEE SKETCH.

AFTER INSTALLATION, THE EXPOSED THREAD OF THE BOLT SHALL BE BURRED WITH A SHARP POINTED TOOL.

THE COST OF THE GUARDRAIL ANCHOR ASSEMBLIES WITH BOLTS, NUTS AND WASHERS COMPLETE IN PLACE, SHALL BE INCLUDED IN THE VARIOUS PAY ITEMS.

THE VERTICAL REINFORCING BARS MAY BE SHIFTED SLIGHTLY IN THE END POST TO CLEAR ASSEMBLY BOLTS.

THE 1 ¼" ∅ HOLES SHALL BE FORMED OR DRILLED WITH A CORE BIT. IMPACT TOOLS WILL NOT BE PERMITTED. ANY CONCRETE DAMAGED BY THIS WORK SHALL BE REPAIRED TO THE SATISFACTION OF THE ENGINEER.

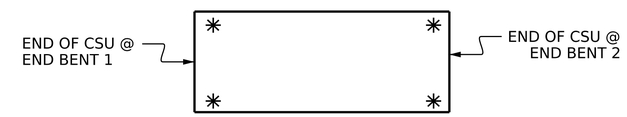

SKETCH SHOWING POINTS OF ATTACHMENT

* LOCATION OF GUARDRAIL ATTACHMENT

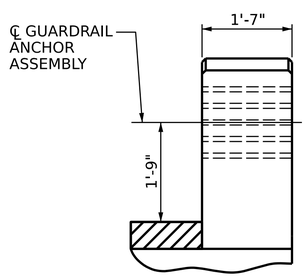

END VIEW
(32" ALASKA RAIL)

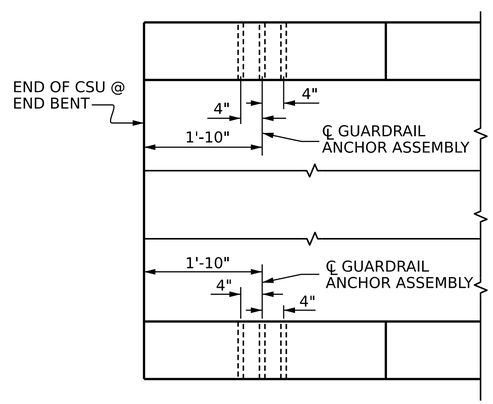

PLAN

LOCATION OF GUARDRAIL ANCHOR AT END POST

PROJECT NO. HB-0053
ASHE COUNTY
STATION: 12+21.00 -L-

SHEET 3 OF 3

STATE OF NORTH CAROLINA
DEPARTMENT OF TRANSPORTATION
RALEIGH
STANDARD

GUARDRAIL ANCHORAGE DETAILS FOR METAL RAILS

NORTH CAROLINA PROFESSIONAL SEAL 037903 ENGINEER JEFFREY M KEPICH
Signed by: Jeffrey Kepich 7C5C71DBEF914E3... 6/12/2026

ms consultants, inc.
5444 Wade Park Blvd.
Suite 160
Raleigh, NC 27607
NC License Number : C-3239

DOCUMENT NOT CONSIDERED FINAL UNLESS ALL SIGNATURES COMPLETED

REVISIONS						
NO.	BY:	DATE:	NO.	BY:	DATE:	
1			3			
2			4			

SHEET NO. S1-15
TOTAL SHEETS 23

ASSEMBLED BY:	J. KEPICH	DATE :	01/2026
CHECKED BY :	J. PAPCIAK	DATE :	02/2026
DRAWN BY :	MAA 5/10	REV. 1/15	MAA/TMG
CHECKED BY :	GM 5/10	REV. 12/17	MAA/THC
		REV. 5/18	MAA/THC

6/2/2026
c:\workdir\ncdot-pw.bentley.com_ncdot-pw-01\jeffrey kepich\d0529525\401_029_HB0053_SMU_GR_S1-15_040480.dgn
jkepich

STD. GRA3 Sht.3

Docusign Envelope ID: DA6AC54A-2325-88F7-839D-EF33E5ACDAC5

8/26/21

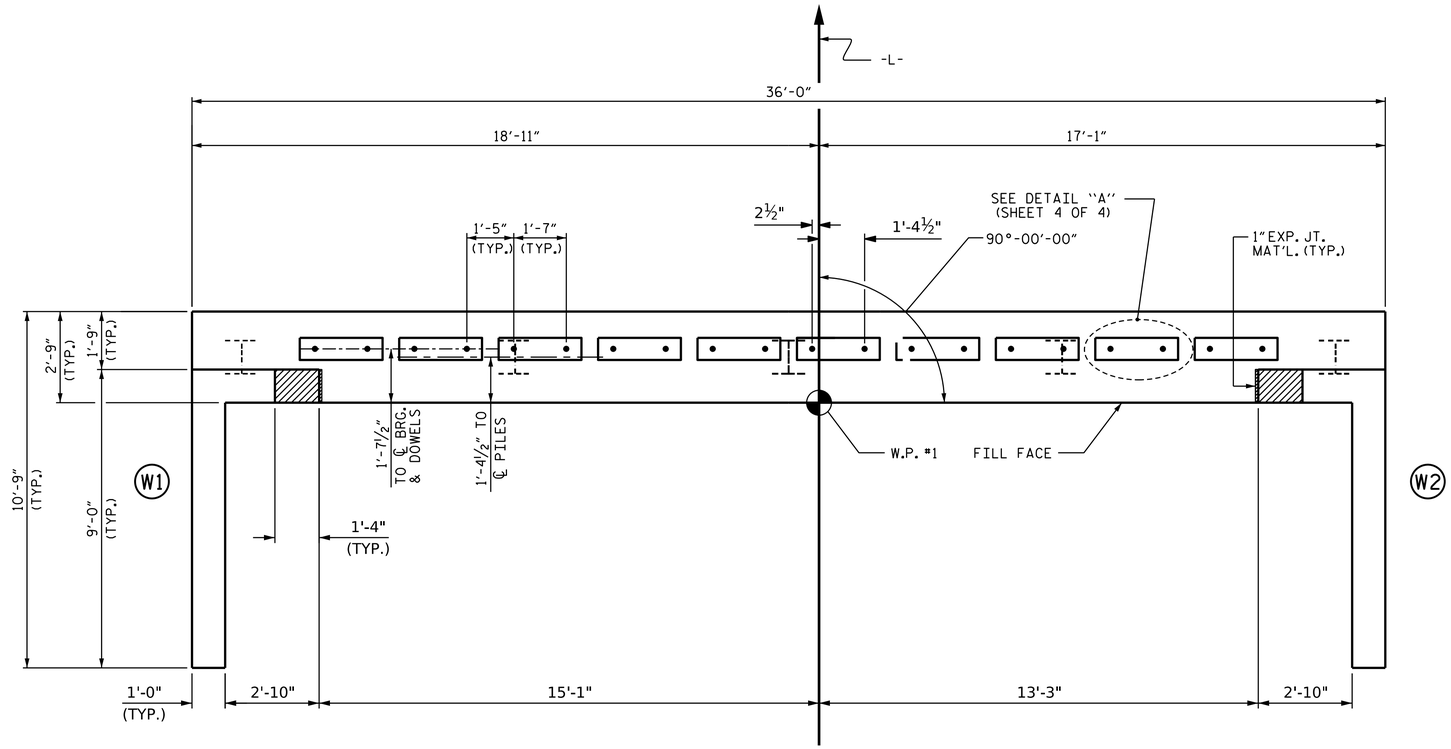

PLAN

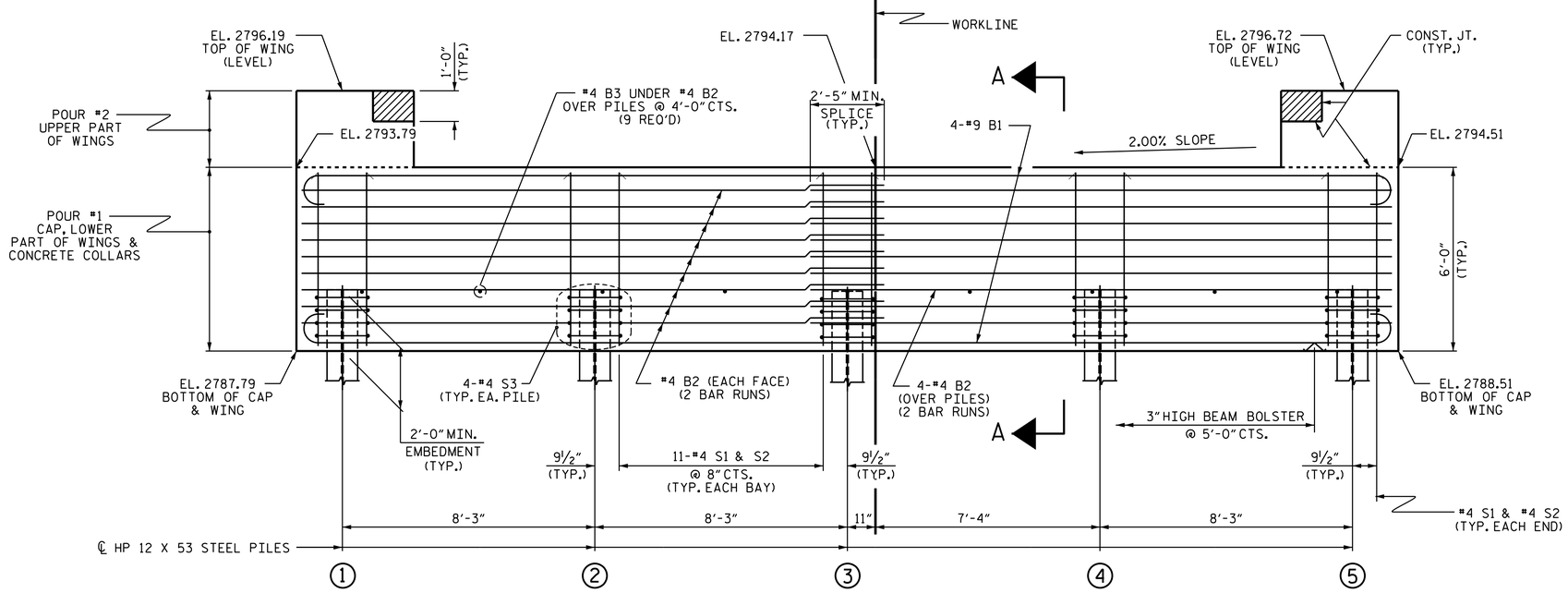

ELEVATION

WINGS NOT SHOWN FOR CLARITY.
FOR SECTION A-A, SEE SHEET 4 OF 4.
CONCRETE COLLARS FOR STEEL PILES NOT SHOWN IN PLAN AND ELEVATION VIEWS FOR CLARITY.
SEE "CORROSION PROTECTION FOR STEEL PILES DETAIL", SHEET 4 OF 4.

NOTES

STIRRUPS IN CAP MAY BE SHIFTED AS NECESSARY TO CLEAR SWEDGE ANCHOR BOLTS.

THE CONCRETE IN THE SHADED AREA OF THE WING SHALL BE POURED AFTER THE VERTICAL CONCRETE BARRIER RAIL IS CAST IF SLIP FORMING IS USED.

FOR PILE SPLICE DETAILS, SEE SHEET 4 OF 4.

FOR WING DETAILS, SEE SHEET 3 OF 4.

SWEDGE ANCHOR BOLTS SHALL MEET THE REQUIREMENTS OF ASTM A449. ANCHOR PLATES, WASHERS, AND NUTS SHALL MEET THE REQUIREMENTS OF THE STANDARD SPECIFICATIONS. ANCHOR BOLTS, ANCHOR PLATES, WASHERS, AND NUTS SHALL BE GALVANIZED IN ACCOORDANCE WITH THE STANDARD SPECIFICATIONS.

NO SEPARATE PAYMENT SHALL BE MADE FOR THE SWEDGE ANCHOR BOLTS, ANCHOR PLATES, WASHERS, AND NUTS. THE COST OF THE MATERIAL AND INSTALLATION SHALL BE CONSIDERED INCIDENTAL TO VARIOUS PAY ITEMS.

TOP OF PILE ELEVATIONS	
1	2789.82
2	2789.99
3	2790.15
4	2790.32
5	2790.48

PROJECT NO. HB-0053
ASHE COUNTY
STATION: 12+21.00 -L-

SHEET 1 OF 4

STATE OF NORTH CAROLINA
DEPARTMENT OF TRANSPORTATION
RALEIGH

SUBSTRUCTURE

END BENT No. 1

NORTH CAROLINA PROFESSIONAL SEAL 037903 ENGINEER JEFFREY M KEPICH
Signed by: Jeffrey Kepich 7C5C71DBEF914E3... 6/12/2026

ms consultants, inc.
5444 Wade Park Blvd.
Suite 160
Raleigh, NC 27607
NC License Number : C-3239

DOCUMENT NOT CONSIDERED FINAL UNLESS ALL SIGNATURES COMPLETED

REVISIONS								SHEET NO.
NO.	BY:	DATE:	NO.	BY:	DATE:			S1-16
1			3					TOTAL SHEETS
2			4					23

ASSEMBLED BY:	J.KEPICH		DATE :	11/2025
CHECKED BY :	J. PAPCIAK		DATE :	02/2026
DRAWN BY :	WJH	12/11	REV. 4/15	MAA/TMG
CHECKED BY :	AAC	12/11		

6/2/2026
c:\workdir\ncdot-pw.bentley.com_ncdot-pw-01\jeffrey kepich\d0529525\401_031_HB0053_SMU_E1_S1-16_040480.dgn
jkepich

Drawing

STD. NO. EB_30_90S4

Docusign Envelope ID: DA6AC54A-2325-88F7-839D-EF33E5ACDAC5

8/26/21

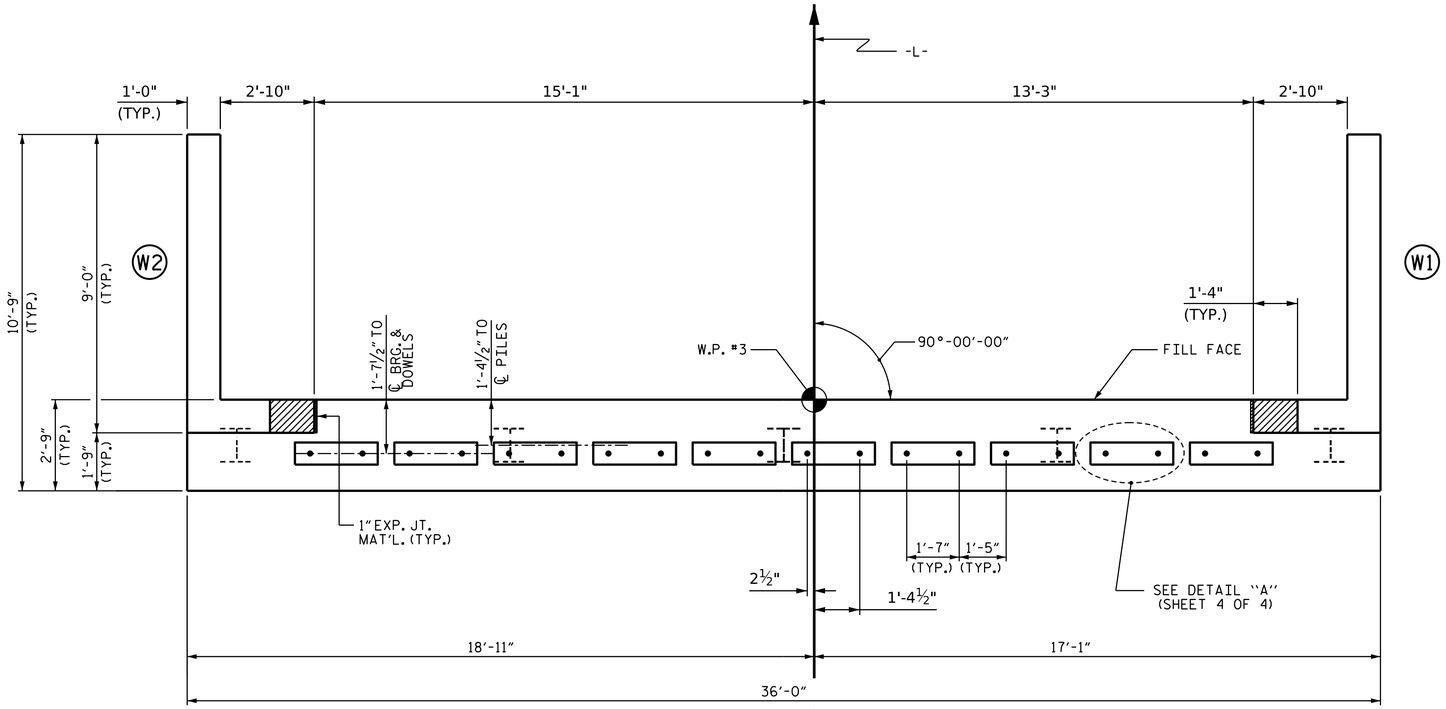

PLAN

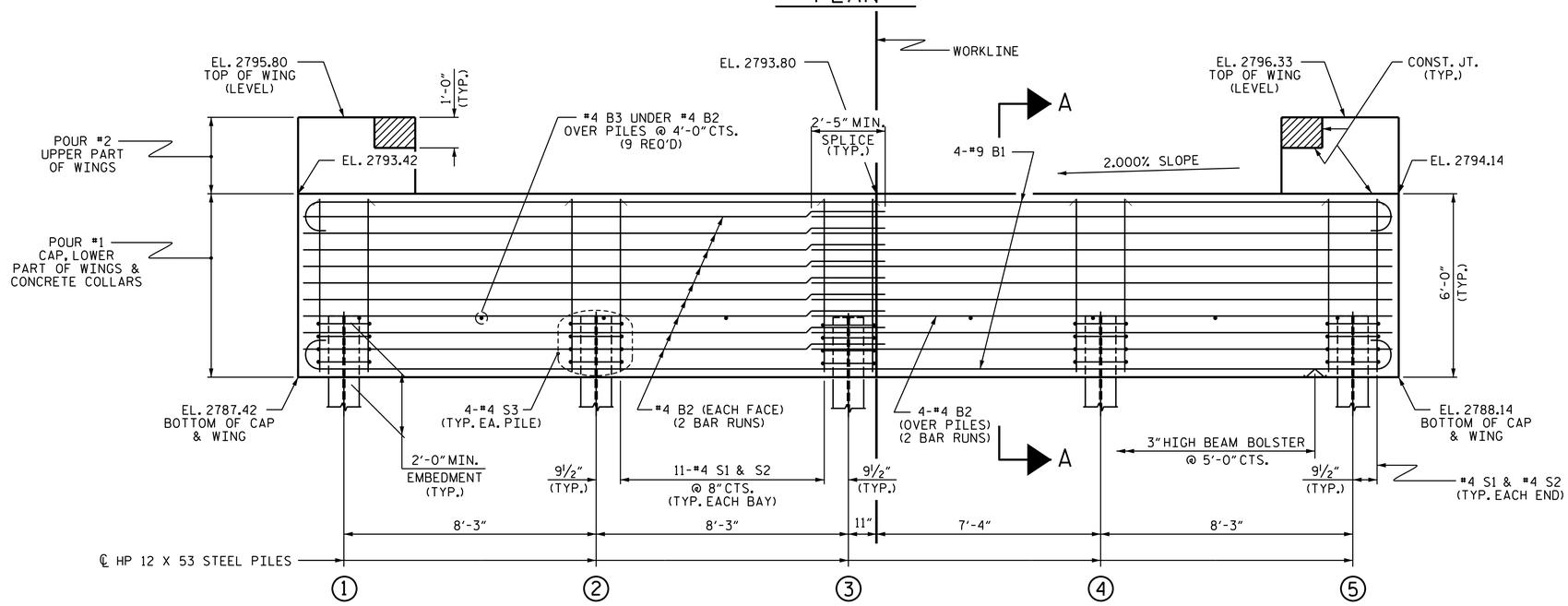

ELEVATION

WINGS NOT SHOWN FOR CLARITY.
FOR SECTION A-A, SEE SHEET 4 OF 4.
CONCRETE COLLARS FOR STEEL PILES NOT SHOWN IN PLAN AND ELEVATION VIEWS FOR CLARITY.
SEE "CORROSION PROTECTION FOR STEEL PILES DETAIL", SHEET 4 OF 4.

NOTES

STIRRUPS IN CAP MAY BE SHIFTED AS NECESSARY TO CLEAR SWEDGE ANCHOR BOLTS.

THE CONCRETE IN THE SHADED AREA OF THE WING SHALL BE POURED AFTER THE VERTICAL CONCRETE BARRIER RAIL IS CAST IF SLIP FORMING IS USED.

FOR PILE SPLICE DETAILS, SEE SHEET 4 OF 4.

FOR WING DETAILS, SEE SHEET 3 OF 4.

SWEDGE ANCHOR BOLTS SHALL MEET THE REQUIREMENTS OF ASTM A449. ANCHOR PLATES, WASHERS, AND NUTS SHALL MEET THE REQUIREMENTS OF THE STANDARD SPECIFICATIONS. ANCHOR BOLTS, ANCHOR PLATES, WASHERS, AND NUTS SHALL BE GALVANIZED IN ACCOORDANCE WITH THE STANDARD SPECIFICATIONS.

NO SEPARATE PAYMENT SHALL BE MADE FOR THE SWEDGE ANCHOR BOLTS, ANCHOR PLATES, WASHERS, AND NUTS. THE COST OF THE MATERIAL AND INSTALLATION SHALL BE CONSIDERED INCIDENTAL TO VARIOUS PAY ITEMS.

TOP OF PILE ELEVATIONS	
1	2789.45
2	2789.62
3	2789.78
4	2789.95
5	2790.11

PROJECT NO. HB-0053
ASHE COUNTY
STATION: 12+21.00 -L-

SHEET 2 OF 4

STATE OF NORTH CAROLINA
DEPARTMENT OF TRANSPORTATION
RALEIGH

SUBSTRUCTURE

END BENT No. 2

NORTH CAROLINA PROFESSIONAL SEAL 037903 ENGINEER JEFFREY M KEPICH
Signed by: Jeffrey Kepich 7C5C71DBEF914E3... 6/12/2026

ms consultants, inc.
5444 Wade Park Blvd.
Suite 160
Raleigh, NC 27607
NC License Number : C-3239

DOCUMENT NOT CONSIDERED FINAL UNLESS ALL SIGNATURES COMPLETED

REVISIONS						SHEET NO.
NO.	BY:	DATE:	NO.	BY:	DATE:	S1-17
1			3			TOTAL SHEETS
2			4			23

ASSEMBLED BY:	J.KEPICH	DATE :	11/2025
CHECKED BY :	J. PAPCIAK	DATE :	02/2026
DRAWN BY :	WJH 12/11	REV. 4/15	MAA/TMG
CHECKED BY :	AAC 12/11		

6/2/2026
c:\workdir\ncdot-pw.bentley.com_ncdot-pw-01\jeffrey kepich\d0529525\401_033_HB0053_SMU_E2_S1-17_040480.dgn
jkepich

STD. NO. EB_30_90S4

Docusign Envelope ID: DA6AC54A-2325-88F7-839D-EF33E5ACDAC5

8/26/21

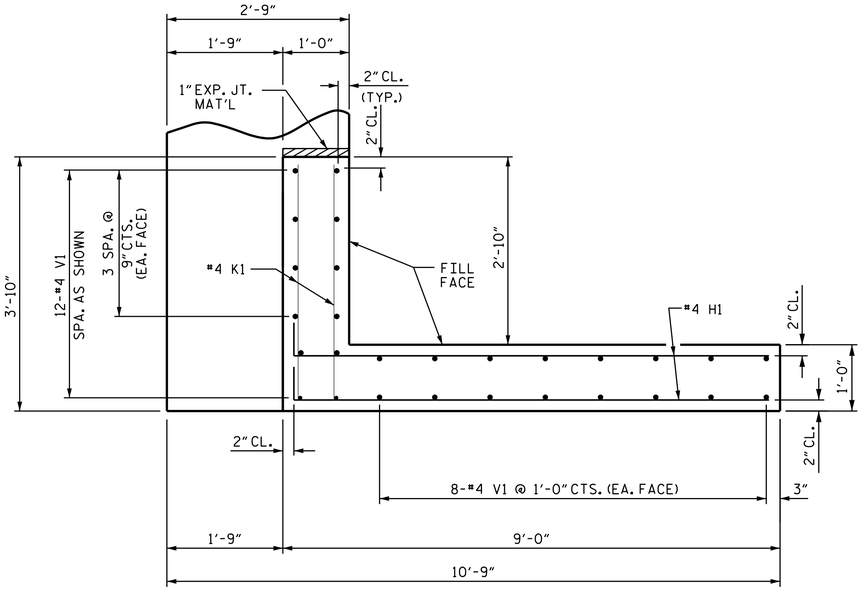

PLAN OF WING (W1)

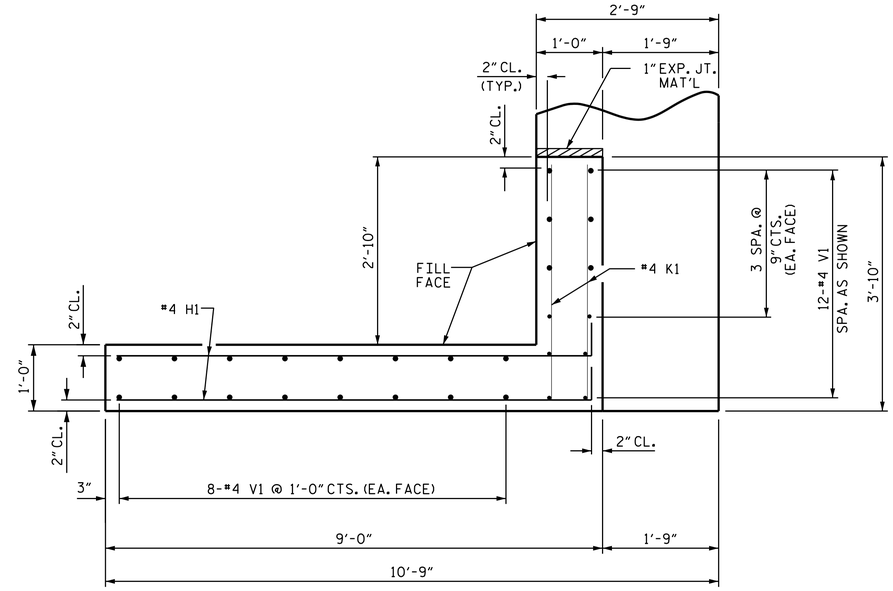

PLAN OF WING (W2)

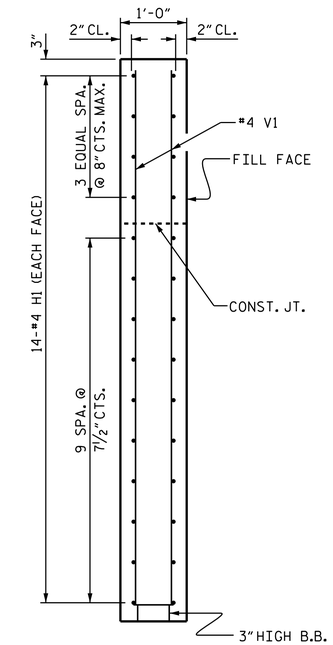

SECTION X-X

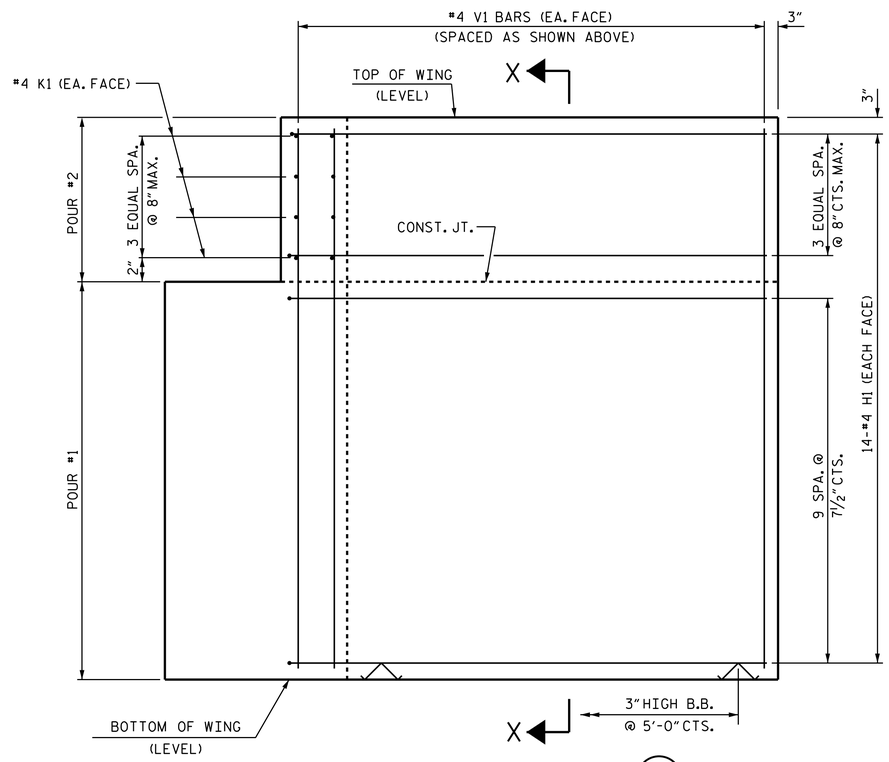

ELEVATION OF WING (W1)

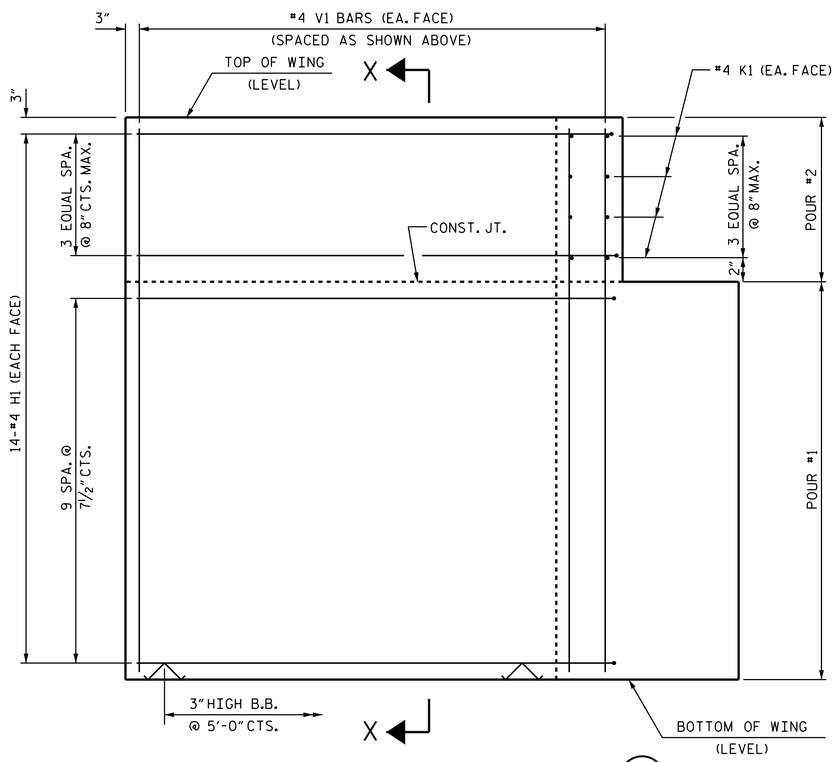

ELEVATION OF WING (W2)

WING DETAILS

PROJECT NO. HB-0053

ASHE COUNTY

STATION: 12+21.00 -L-

SHEET 3 OF 4

STATE OF NORTH CAROLINA
DEPARTMENT OF TRANSPORTATION
RALEIGH

SUBSTRUCTURE

END BENT
WING DETAILS

ASSEMBLED BY:	J. KEPICH	DATE :	01/2026
CHECKED BY :	J. PAPCIAK	DATE :	02/2026
DRAWN BY :	WJH 12/11	REV. 4/15	MAA/TMG
CHECKED BY :	AAC 12/11		

ms consultants, inc.
5444 Wade Park Blvd.
Suite 160
Raleigh, NC 27607
NC License Number : C-3239

NORTH CAROLINA PROFESSIONAL SEAL 037903 ENGINEER JEFFREY M. KEPICH

Signed by: Jeffrey Kepich 7C5C71DBEF914E3... 6/12/2026

DOCUMENT NOT CONSIDERED FINAL UNLESS ALL SIGNATURES COMPLETED

REVISIONS						SHEET NO.
NO.	BY:	DATE:	NO.	BY:	DATE:	S1-18
1			3			TOTAL SHEETS
2			4			23

STD. NO. EB_30_90S4

6/2/2026
c:\workdir\ncdot-pw.bentley.com_ncdot-pw-01\jeffrey kepich\d0529525\401_035_HB0053_SMU_E3_S1-18_040480.dgn
jkepich

Docusign Envelope ID: DA6AC54A-2325-88F7-839D-EF33E5ACDAC5

8/26/21

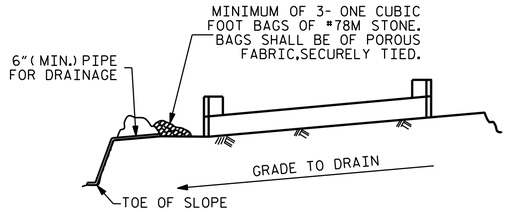

BAGGED STONE AND PIPE SHALL BE PLACED IMMEDIATELY AFTER COMPLETION OF END BENT EXCAVATION. PIPE MAY BE EITHER CONCRETE, CORRUGATED STEEL, CORRUGATED ALUMINUM ALLOY, OR CORRUGATED PLASTIC. PERFORATED PIPE WILL NOT BE ALLOWED.

BAGGED STONE SHALL REMAIN IN PLACE UNTIL THE ENGINEER DIRECTS THAT IT BE REMOVED. THE CONTRACTOR SHALL REMOVE AND DISPOSE OF SILT ACCUMULATIONS AT BAGGED STONE WHEN SO DIRECTED BY THE ENGINEER. BAGS SHALL BE REMOVED AND REPLACED WHENEVER THE ENGINEER DETERMINES THAT THEY HAVE DETERIORATED AND LOST THEIR EFFECTIVENESS.

NO SEPARATE PAYMENT WILL BE MADE FOR THIS WORK AND THE ENTIRE COST OF THIS WORK SHALL BE INCLUDED IN THE UNIT CONTRACT PRICE BID FOR THE SEVERAL PAY ITEMS.

TEMPORARY DRAINAGE AT END BENT

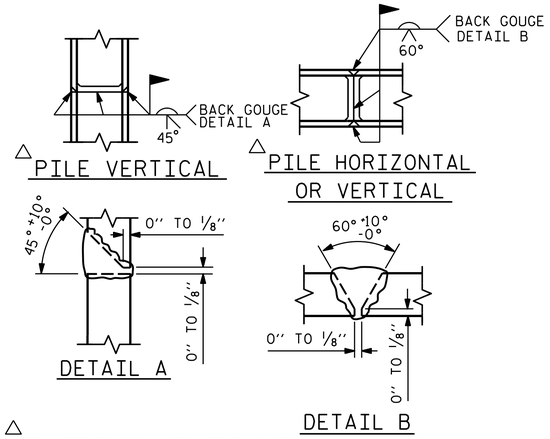

△ POSITION OF PILE DURING WELDING.

PILE SPLICE DETAILS

BAR TYPES

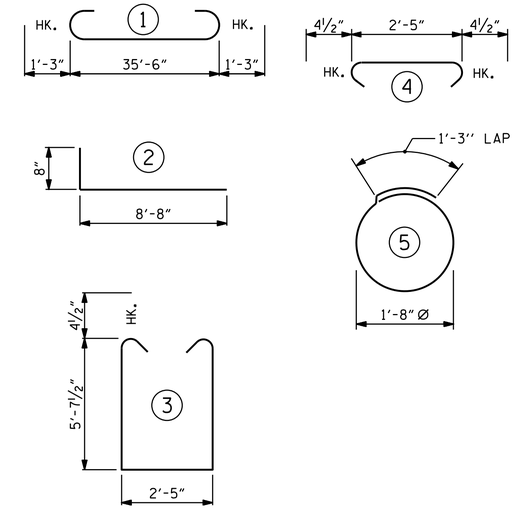

ALL BAR DIMENSIONS ARE OUT TO OUT.

END BENT No. 1	END BENT No. 2
HP 12 X 53 STEEL PILES NO: 5 LIN. FT.= 90	HP 12 X 53 STEEL PILES NO: 5 LIN. FT.= 75
PILE DRIVING EQUIPMENT SETUP FOR HP 12 X 53 STEEL PILES NO: 5	PILE DRIVING EQUIPMENT SETUP FOR HP 12 X 53 STEEL PILES NO: 5

BILL OF MATERIAL FOR ONE END BENT

BAR	NO.	SIZE	TYPE	LENGTH	WEIGHT
B1	8	#9	1	38'-0"	1034
B2	44	#4	STR	19'-1"	561
B3	9	#4	STR	2'-5"	15
H1	56	#4	2	9'-4"	349
K1	16	#4	STR	3'-5"	37
S1	46	#4	3	14'-5"	443
S2	46	#4	4	3'-2"	97
S3	20	#4	5	6'-6"	87
V1	56	#4	STR	7'-11"	296

REINFORCING STEEL (FOR ONE END BENT) 2919 LBS.

CLASS A CONCRETE BREAKDOWN (FOR ONE END BENT)

POUR #1 CAP, LOWER PART OF WINGS & COLLARS 26.4 C.Y.

POUR #2 UPPER PART OF WINGS 2.0 C.Y.

TOTAL CLASS A CONCRETE 28.4 C.Y.

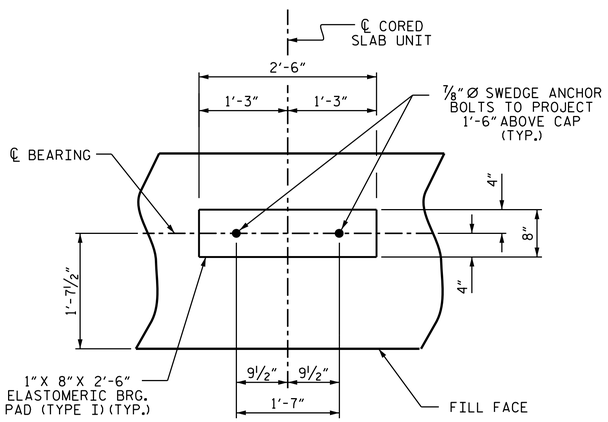

DETAIL "A"

(END BENT No. 1 SHOWN, END BENT No. 2 SIMILAR BY ROTATION)

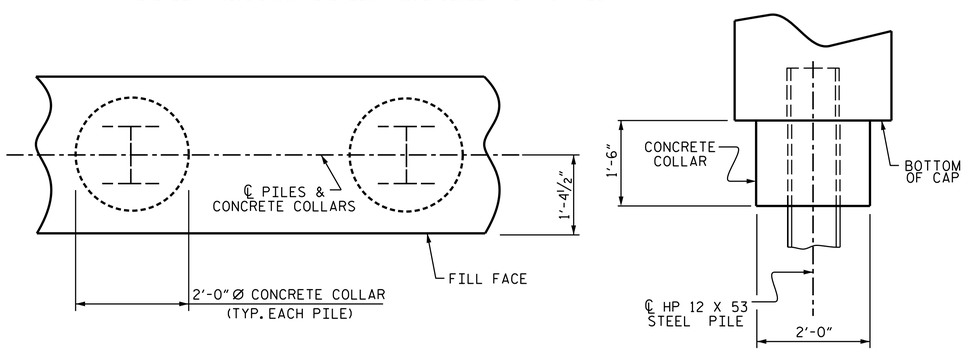

PLAN ELEVATION

CORROSION PROTECTION FOR STEEL PILES DETAIL

(END BENT No. 1 SHOWN, END BENT No. 2 SIMILAR BY ROTATION)

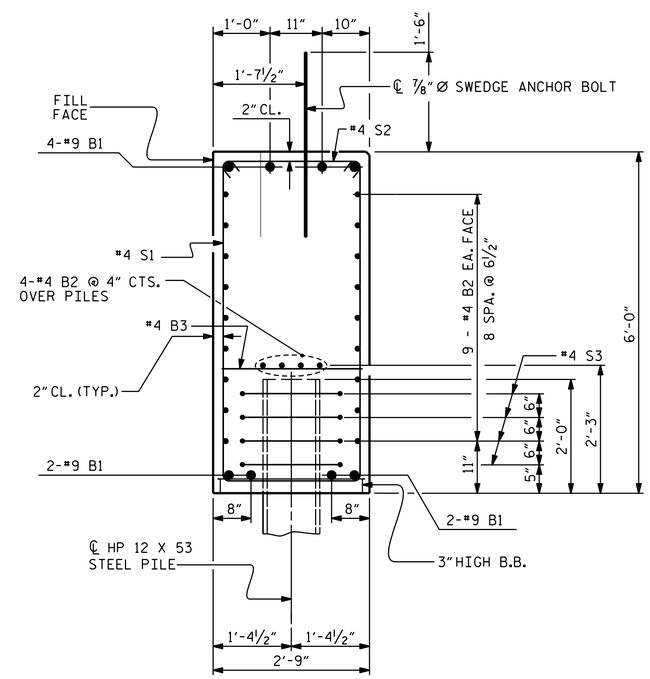

SECTION A-A

(CONCRETE COLLAR NOT SHOWN FOR CLARITY. SEE "CORROSION PROTECTION FOR STEEL PILES DETAIL.")

PROJECT NO. HB-0053

ASHE COUNTY

STATION: 12+21.00 -L-

SHEET 4 OF 4

STATE OF NORTH CAROLINA
DEPARTMENT OF TRANSPORTATION
RALEIGH

SUBSTRUCTURE

END BENT No. 1 & 2 DETAILS

NORTH CAROLINA PROFESSIONAL SEAL 037903 ENGINEER JEFFREY M. KEPICH

Signed by: Jeffrey Kepich 7C5C71DBEF914E3... 6/12/2026

ms consultants, inc.
5444 Wade Park Blvd.
Suite 160
Raleigh, NC 27607
NC License Number : C-3239

DOCUMENT NOT CONSIDERED FINAL UNLESS ALL SIGNATURES COMPLETED

REVISIONS						SHEET NO.
NO.	BY:	DATE:	NO.	BY:	DATE:	S1-19
1			3			TOTAL SHEETS
2			4			23

ASSEMBLED BY:	J. KEPICH	DATE :	01/2026
CHECKED BY :	J. PAPCIAK	DATE :	02/2026
DRAWN BY :	WJH 12/11	REV. 4/17	MAA/THC
CHECKED BY :	AAC 12/11		

6/2/2026
c:\workdir\ncdot-pw.bentley.com_ncdot-pw-01\jeffrey kepich\d0529525\401_037_HB0053_SMU_E4_S1-19_040480.dgn
jkepich

STD. NO. EB_30_90S4

Docusign Envelope ID: DA6AC54A-2325-88F7-839D-EF33E5ACDAC5

8/26/21

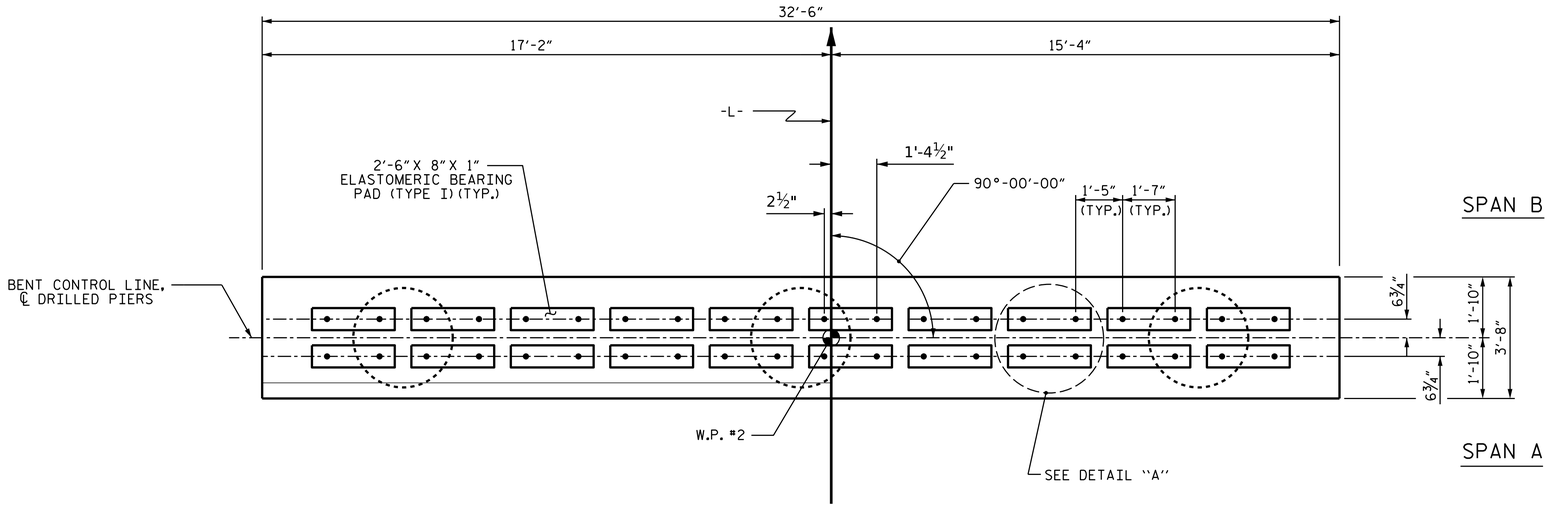

PLAN

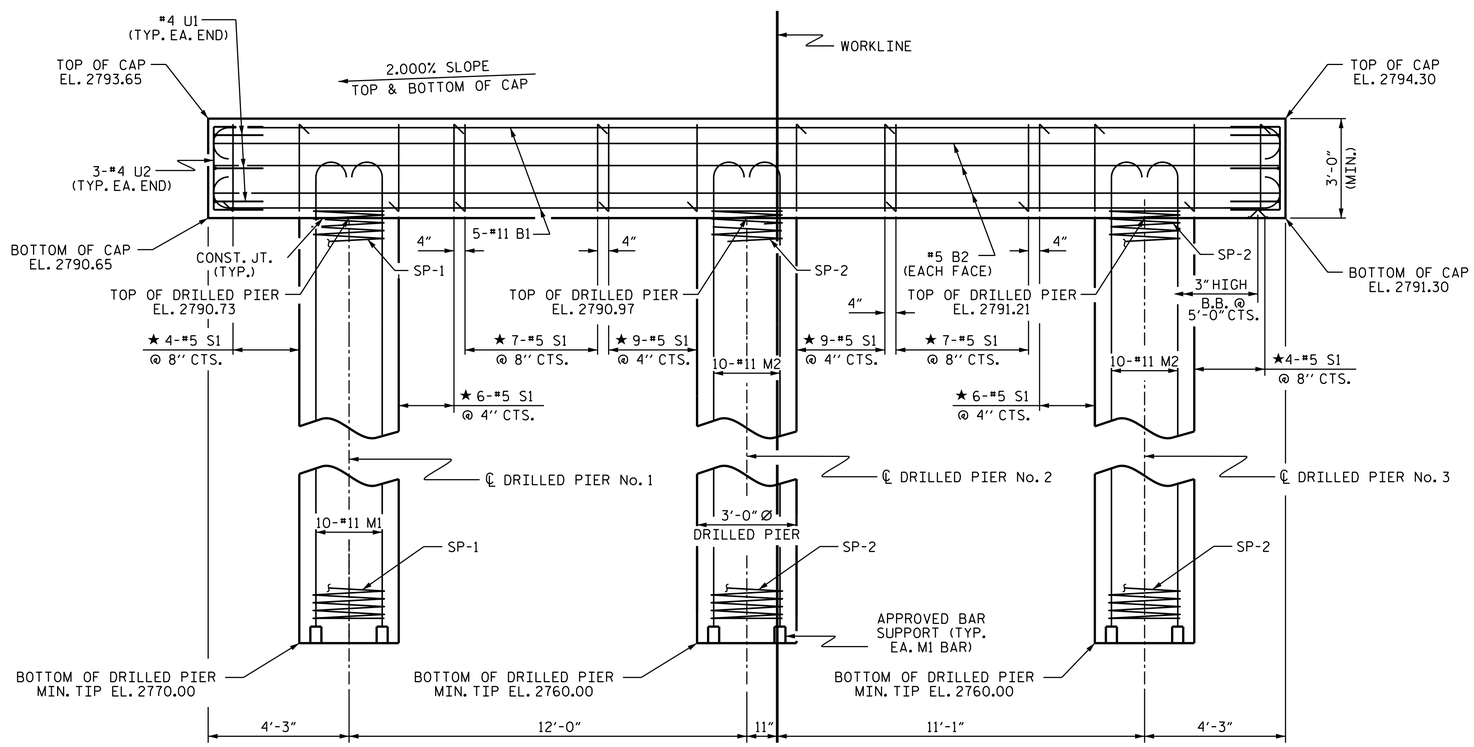

ELEVATION

DIMENSIONS & REINFORCING STEEL ARE TYPICAL FOR EACH DRILLED PIER UNLESS OTHERWISE NOTED.

NOTES

STIRRUPS IN CAP MAY BE SHIFTED AS NECESSARY TO CLEAR SWEDGE ANCHOR BOLT LOCATIONS.

HOOKS ON "V" BARS MAY BE TURNED AS NECESSARY FOR PLACING REINFORCING STEEL.

FOR DRILLED PIERS, SEE SECTION 411 OF THE STANDARD SPECIFICATIONS.

ALL STEEL IN THE DRILLED PIERS IS INCLUDED IN THE PAY ITEMS FOR "REINFORCING STEEL" AND "SPIRAL COLUMN REINFORCING STEEL."

★ INVERT ALTERNATE STIRRUPS.

THE CONTRACTOR'S ATTENTION IS CALLED TO THE FACT THAT THE LONGITUDINAL REINFORCEMENT FOR DRILLED PIERS IS DETAILED WITH 3 FEET OF EXTRA LENGTH. AS THERE IS NO SPLICE, VERIFY THE "M" BAR LENGTH INTO THE CAP PRIOR TO POURING THE DRILLED PIER CONCRETE AND CUT AS NECESSARY MAINTAINING THE EMBEDMENT INTO THE CAP AS PER PLANS.

SWEDGE ANCHOR BOLTS SHALL MEET THE REQUIREMENTS OF ASTM A449. ANCHOR PLATES, WASHERS, AND NUTS SHALL MEET THE REQUIREMENTS OF THE STANDARD SPECIFICATIONS. SWEDGE ANCHOR BOLTS, ANCHOR PLATES, WASHERS, AND NUTS SHALL BE GALVANIZED IN ACCORDANCE WITH THE STANDARD SPECIFICATIONS.

NO SEPARATE PAYMENT SHALL BE MADE FOR THE SWEDGE ANCHOR BOLTS, ANCHOR PLATES, WASHERS, AND NUTS. THE COST OF THE MATERIAL AND INSTALLATION SHALL BE CONSIDERED INCIDENTAL TO VARIOUS PAY ITEMS.

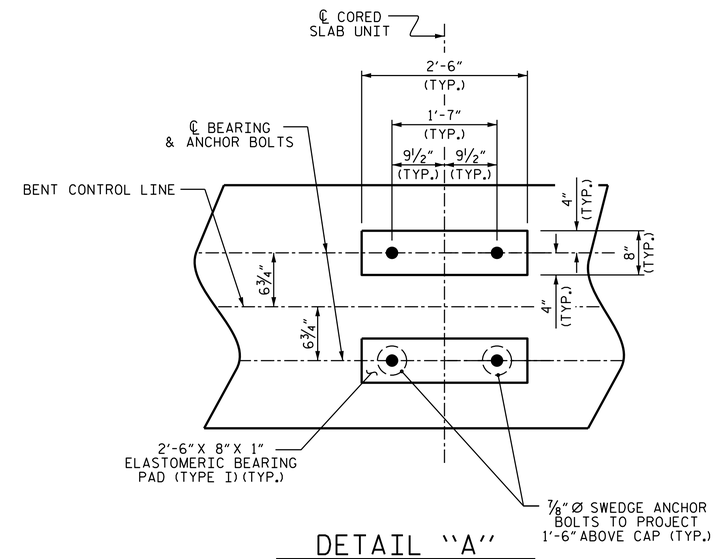

DETAIL "A"

(DIMENSIONS ARE TYPICAL EACH BEARING)

PROJECT NO. HB-0053

ASHE COUNTY

STATION: 12+21.00 -L-

SHEET 1 OF 2

STATE OF NORTH CAROLINA
DEPARTMENT OF TRANSPORTATION
RALEIGH

SUBSTRUCTURE
BENT No. 1

NORTH CAROLINA PROFESSIONAL SEAL 037903 ENGINEER JEFFREY M. KEPICH

Signed by: Jeffrey Kepich 7C5C71DBEF914E3... 6/12/2026

ms consultants, inc.
5444 Wade Park Blvd.
Suite 160
Raleigh, NC 27607
NC License Number : C-3239

DOCUMENT NOT CONSIDERED FINAL UNLESS ALL SIGNATURES COMPLETED

REVISIONS							SHEET NO.
NO.	BY:	DATE:	NO.	BY:	DATE:		S1-20
1			3				TOTAL SHEETS
2			4				23

ASSEMBLED BY:	J. KEPICH	DATE :	01/2026
CHECKED BY :	J. PAPCIAK	DATE :	02/2026
DRAWN BY :	DGE 4/10	REV. 11/14	MAA/TMG
CHECKED BY :	MKT 4/10		

6/2/2026
c:\workdir\ncdot-pw.bentley.com_ncdot-pw-01\jeffrey kepich\d0529525\401_039_HB0053_SMU_B1_S1-20_040480.dgn
jkepich

STD. NO. DP_BT_30_90S_<50'

Docusign Envelope ID: DA6AC54A-2325-88F7-839D-EF33E5ACDAC5

8/26/21

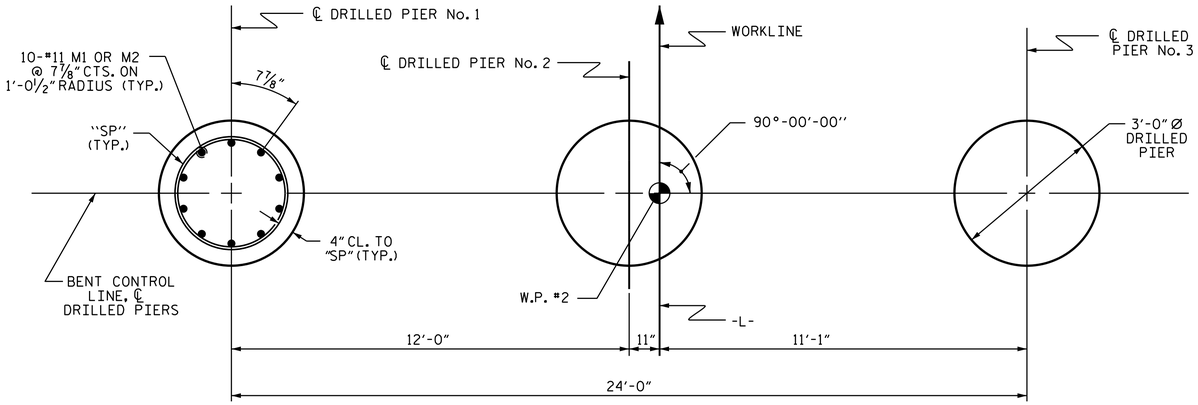

PLAN OF DRILLED PIERS

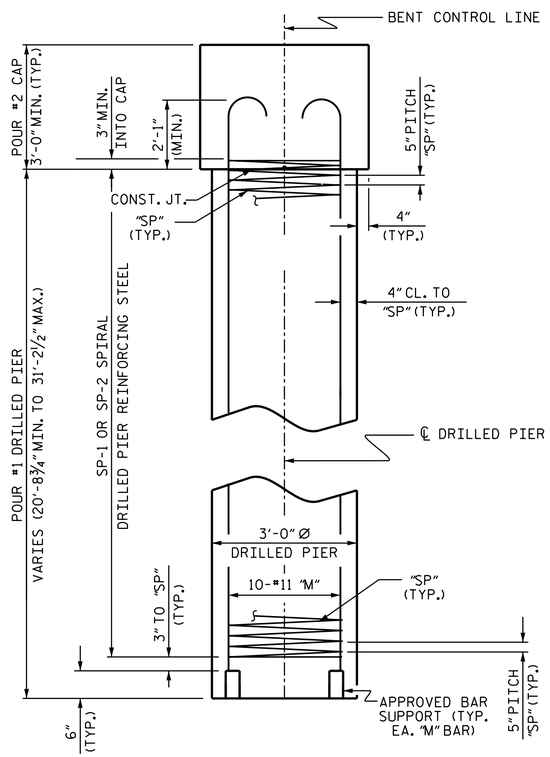

END ELEVATION

BAR TYPES

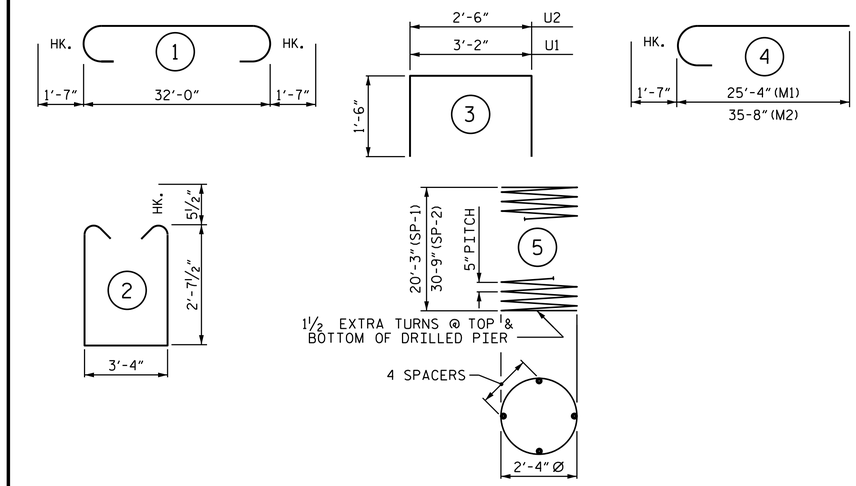

ALL BAR DIMENSIONS ARE OUT TO OUT

BILL OF MATERIAL
FOR ONE BENT

BAR	NO.	SIZE	TYPE	LENGTH	WEIGHT
B1	10	#11	1	35'-2"	1868
B2	6	#5	STR	32'-2"	201
M1	10	#11	4	26'-11"	1430
M2	20	#11	4	37'-3"	3958
S1	52	#5	2	9'-6"	515
U1	6	#4	3	6'-2"	25
U2	6	#4	3	5'-6"	22

REINFORCING STEEL (FOR ONE BENT) 8019 LBS.

SP-1	1	*	5	370'-1"	386
SP-2	2	*	5	550'-6"	1148

SPIRAL COLUMN REINFORCING STEEL (FOR ONE BENT) 1534 LBS.

* THE SP-1 SPIRAL REINFORCING STEEL SHALL BE W31 OR D-31 COLD DRAWN WIRE OR #5 PLAIN OR DEFORMED BAR

CLASS A CONCRETE BREAKDOWN (FOR ONE BENT)

POUR #2 (CAP) 13.3 C.Y.

TOTAL CLASS A CONCRETE 13.3 C.Y.

DRILLED PIERS: (FOR ONE BENT)

DRILLED PIER CONCRETE
POUR #1 (DRILLED PIERS) 21.7 C.Y.

PERMANENT STEEL CASING FOR 3'-0" Ø DRILLED PIER 24 LIN. FT.

CSL TUBES 1 EA.

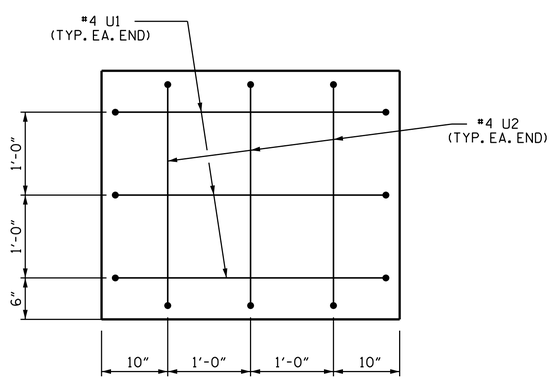

END OF CAP VIEW
(TYPICAL BOTH ENDS)

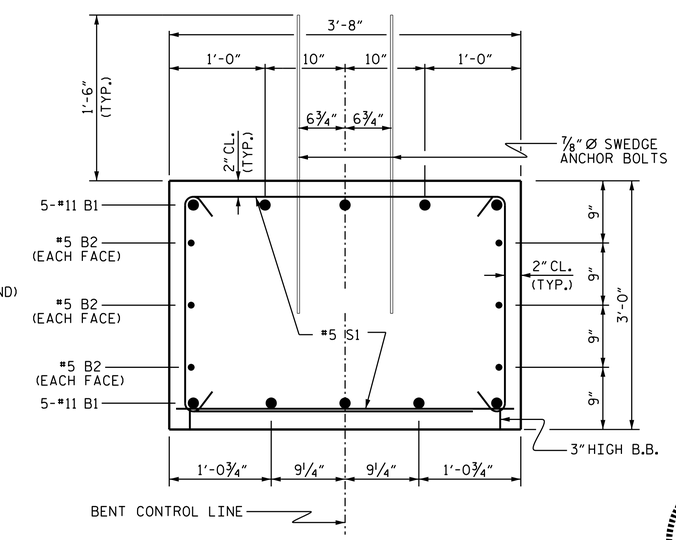

SECTION THRU CAP

PROJECT NO. HB-0053
ASHE COUNTY
STATION: 12+21.00 -L-

SHEET 2 OF 2

STATE OF NORTH CAROLINA
DEPARTMENT OF TRANSPORTATION
RALEIGH

SUBSTRUCTURE
BENT No. 1

NORTH CAROLINA PROFESSIONAL SEAL 037903 ENGINEER JEFFREY M KEPICH
Signed by: Jeffrey Kepich 7C5C71DBEF914E3... 6/12/2026

ms consultants, inc.
5444 Wade Park Blvd.
Suite 160
Raleigh, NC 27607
NC License Number : C-3239

DOCUMENT NOT CONSIDERED FINAL UNLESS ALL SIGNATURES COMPLETED

REVISIONS						SHEET NO.
NO.	BY:	DATE:	NO.	BY:	DATE:	S1-21
1			3			TOTAL SHEETS
2			4			23

ASSEMBLED BY:	J. KEPICH	DATE :	01/2026
CHECKED BY :	J. PAPCIAK	DATE :	02/2026
DRAWN BY :	DGE 4/10	REV. 11/14	MAA/TMG
CHECKED BY :	MKT 4/10		

6/2/2026
c:\workdir\ncdot-pw.bentley.com_ncdot-pw-01\jeffrey kepich\d0529525\401_041_HB0053_SMU_B2_S1-21_040480.dgn
jkepich

STD. NO. DP_BT_30_90S_<50'

Docusign Envelope ID: DA6AC54A-2325-88F7-839D-EF33E5ACDAC5

8/26/21

NOTES :

BANK STABILIZATION IS A ROADWAY PAY ITEM.
SEE ROADWAY PLANS FOR QUANTITIES.

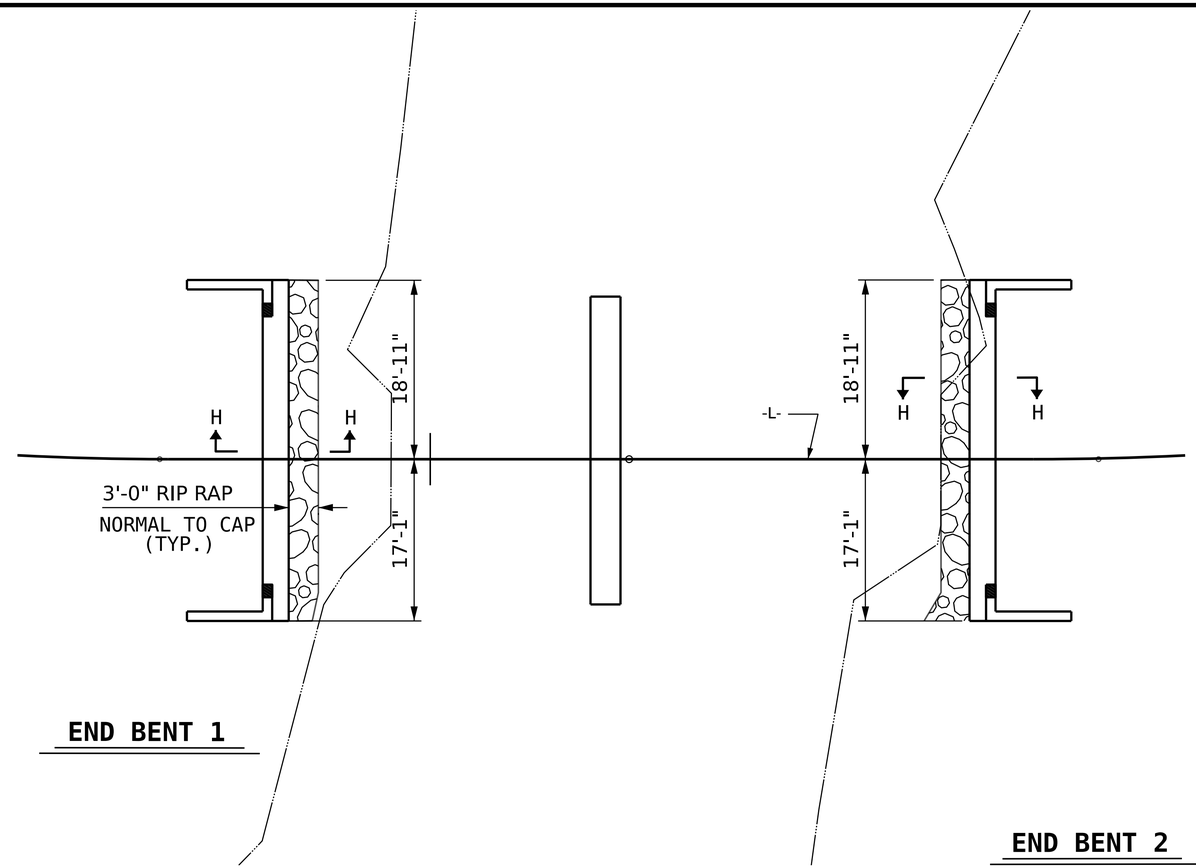

RIP RAP PLAN

ESTIMATED QUANTITIES		
BRIDGE @ STA. 12+21.00 -L-	RIP RAP CLASS II (3'-0" THICK)	GEOTEXTILE FOR DRAINAGE
	TONS	SQUARE YARDS
END BENT 1	18	36
END BENT 1	18	36

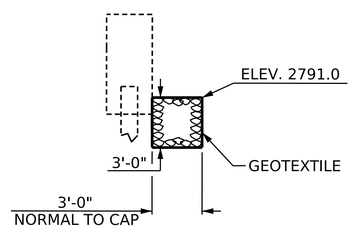

SECTION H-H

BERM RIP RAPPED

PROJECT NO. HB-0053
ASHE COUNTY
STATION: 12+21.00 -L-

STATE OF NORTH CAROLINA
DEPARTMENT OF TRANSPORTATION
RALEIGH

BANK STABILIZATION RIP RAP DETAILS

NORTH CAROLINA PROFESSIONAL SEAL 037903 ENGINEER JEFFREY M KEPICH

Signed by: Jeffrey Kepich 7C5C71DBEF914E3...
6/12/2026

ms consultants, inc.
5444 Wade Park Blvd.
Suite 160
Raleigh, NC 27607
NC License Number : C-3239

DOCUMENT NOT CONSIDERED FINAL UNLESS ALL SIGNATURES COMPLETED

REVISIONS							SHEET NO.
NO.	BY:	DATE:	NO.	BY:	DATE:		S1-22
1			3				TOTAL SHEETS
2			4				23

DRAWN BY : J. KEPICH DATE : 12/25
CHECKED BY : J. PAPCIAK DATE : 02/26
DESIGN ENGINEER OF RECORD: J. KEPICH DATE : 02/26

6/2/2026
c:\workdir\ncdot-pw.bentley.com_ncdot-pw-01\jeffrey kepich\d0529525\401_043_HB0053_SMU_RR_S1-22_040480.dgn
jkepich

Docusign Envelope ID: DA6AC54A-2325-88F7-839D-EF33E5ACDAC5

8/26/21

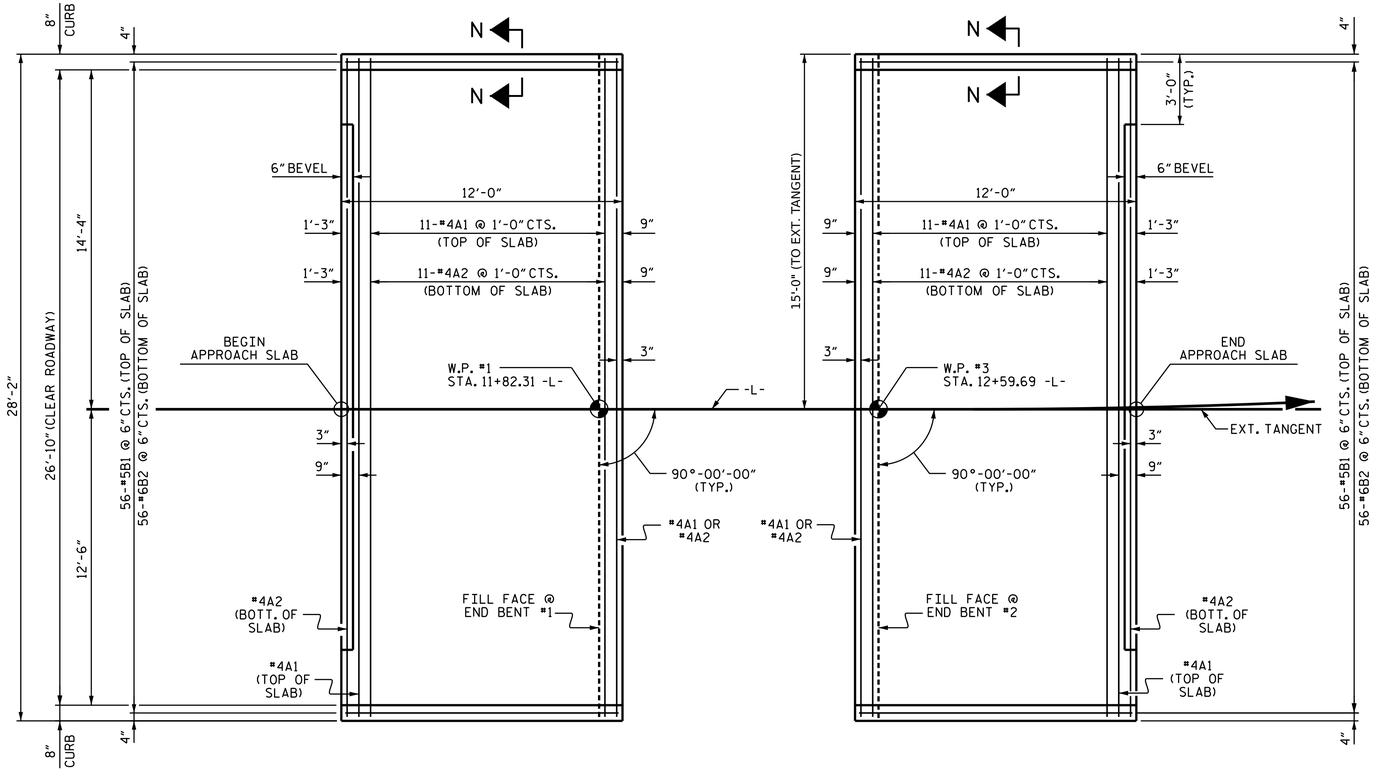

PLAN @ END BENT #1 PLAN @ END BENT #2

DIMENSIONS SHOWN ARE TYPICAL FOR BOTH APPROACH SLABS

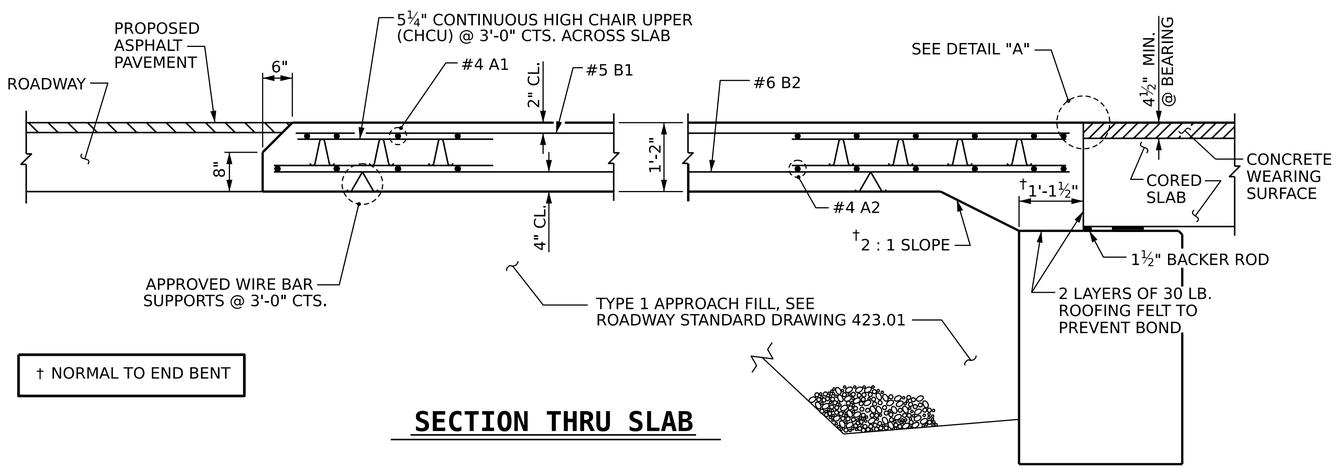

† NORMAL TO END BENT

SECTION THRU SLAB

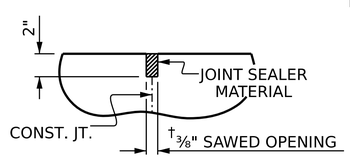

DETAIL "A"

NOTES

FOR BRIDGE APPROACH FILL, SEE ROADWAY PLANS.

AREA BETWEEN THE WINGWALL AND APPROACH SLAB SHALL BE GRADED TO DRAIN THE WATER AWAY FROM THE FILL FACE OF THE BRIDGE AND SHALL BE PAVED. SEE ROADWAY PLANS.

APPROACH SLABS SHALL BE POURED AFTER CONCRETE WEARING SURFACE IS POURED.

THE JOINT OPENING AT THE APPROACH SLAB/DECK INTERFACE SHALL BE SAWED NO MORE THAN 12 HOURS AFTER THE APPROACH SLAB IS CAST. THE JOINT SHALL BE CLEANED OF ALL DEBRIS BEFORE THE SEALANT IS APPLIED. THE JOINT SEALER MATERIAL SHALL CONFORM TO THE REQUIREMENTS OF SECTION 1028-3 OF THE STANDARD SPECIFICATIONS.

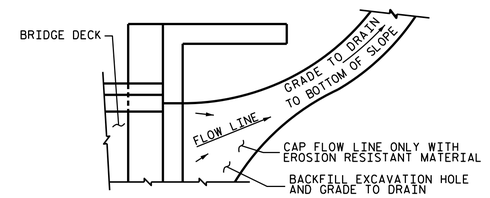

NOTE: IF THE APPROACH SLAB IS NOT CONSTRUCTED IMMEDIATELY AFTER THE BACKFILLING OF THE END BENT EXCAVATION, GRADE TO DRAIN TO THE BOTTOM OF THE SLOPE AND PROVIDE EROSION RESISTANT MATERIAL, SUCH AS FIBERGLASS ROVING OR AS DIRECTED BY THE ENGINEER TO PREVENT SOIL EROSION AND TO PROTECT THE AREA ADJACENT TO THE STRUCTURE. THE CONTRACTOR WILL BE REQUIRED TO REMOVE THESE MATERIALS PRIOR TO CONSTRUCTION OF THE APPROACH SLAB.

TEMPORARY DRAINAGE DETAIL

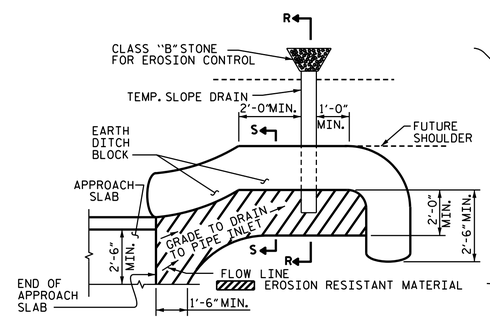

NOTE: IMMEDIATELY AFTER THE CONSTRUCTION OF THE APPROACH SLAB, THE CONTRACTOR SHALL PROVIDE TEMPORARY BERM AND SLOPE DRAIN. CONTRACTOR SHALL GRADE TO PIPE INLET AND PROVIDE EROSION RESISTANT MATERIAL AS SHOWN. THE EROSION RESISTANT MATERIAL SHALL BE EITHER 1) ASPHALT PLANT MIX, TYPE 1 OR TYPE 2, MIN. 2" DEPTH, 2) EROSION CONTROL MAT, OR 3) CONCRETE, AS DIRECTED BY THE ENGINEER. THE SLOPE DRAIN SHALL CONSIST OF A NON-PERFORATED TEMPORARY DRAINAGE PIPE, 12 INCHES IN DIAMETER.

PLAN VIEW

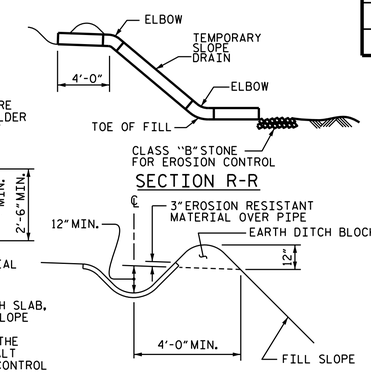

TEMPORARY BERM AND SLOPE DRAIN DETAILS

(TO BE USED WHEN SHOULDER BERM GUTTER IS REQUIRED)

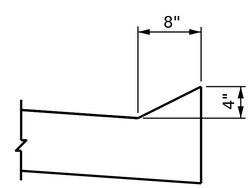

SECTION N-N

CURB DETAILS

BILL OF MATERIAL

APPROACH SLAB AT EB #1

BAR	NO.	SIZE	TYPE	LENGTH	WEIGHT
* A1	13	#4	STR	27'-10"	242
A2	13	#4	STR	27'-10"	242
* B1	56	#5	STR	11'-2"	652
B2	56	#6	STR	11'-8"	981
REINFORCING STEEL				LBS.	1223
* EPOXY COATED REINFORCING STEEL				LBS.	894
CLASS AA CONCRETE				C. Y.	16.2

APPROACH SLAB AT EB #2

BAR	NO.	SIZE	TYPE	LENGTH	WEIGHT
* A1	13	#4	STR	27'-10"	242
A2	13	#4	STR	27'-10"	242
* B1	56	#5	STR	11'-2"	652
B2	56	#6	STR	11'-8"	981
REINFORCING STEEL				LBS.	1223
* EPOXY COATED REINFORCING STEEL				LBS.	894
CLASS AA CONCRETE				C. Y.	16.2

SPLICE LENGTHS

BAR SIZE	EPOXY COATED	UNCOATED
#4	1'-11"	1'-7"
#5	2'-5"	2'-0"
#6	3'-7"	2'-5"

PROJECT NO. HB-0053

ASHE COUNTY

STATION: 12+21.00 -L-

STATE OF NORTH CAROLINA
DEPARTMENT OF TRANSPORTATION
RALEIGH

STANDARD
BRIDGE APPROACH SLAB
FOR PRESTRESSED CONCRETE
CORED SLAB UNIT
(SUB-REGIONAL TIER)
90° SKEW

NORTH CAROLINA PROFESSIONAL SEAL 037903 ENGINEER JEFFREY M. KEPICH

Signed by: Jeffrey Kepich 7C5C71DBEF914E3...
6/12/2026

ms consultants, inc.
5444 Wade Park Blvd.
Suite 160
Raleigh, NC 27607
NC License Number : C-3239

DOCUMENT NOT CONSIDERED FINAL UNLESS ALL SIGNATURES COMPLETED

REVISIONS						SHEET NO.
NO.	BY:	DATE:	NO.	BY:	DATE:	S1-23
1			3			TOTAL SHEETS
2			4			23

ASSEMBLED BY:	J.KEPICH	DATE :	12/2025
CHECKED BY :	J. PAPCIAK	DATE :	02/2026
DRAWN BY :	SMS/MAA 5-09	REV. 08-19	BNB/THC
CHECKED BY :	BCH 5-09	REV. 01-25	HRS

6/2/2026
c:\workdir\ncdot-pw.bentley.com_ncdot-pw-01\jeffrey kepich\d0529525\401_045_HB0053_SMU_AS_S1-23_040480.dgn
jkepich

STD. NO. BAS_30_90S

STANDARD NOTES

DESIGN DATA:

SPECIFICATIONS	AASHTO (CURRENT)
LIVE LOAD	SEE PLANS
IMPACT ALLOWANCE	SEE AASHTO
STRESS IN EXTREME FIBER OF STRUCTURAL STEEL - AASHTO M270 GRADE 36	20,000 LBS. PER SQ. IN.
- AASHTO M270 GRADE 50W	27,000 LBS. PER SQ. IN.
- AASHTO M270 GRADE 50	27,000 LBS. PER SQ. IN.
REINFORCING STEEL IN TENSION - GRADE 60	24,000 LBS. PER SQ. IN.
CONCRETE IN COMPRESSION	1,200 LBS. PER SQ. IN.
CONCRETE IN SHEAR	SEE AASHTO
STRUCTURAL TIMBER - TREATED OR UNTREATED EXTREME FIBER STRESS	1,800 LBS. PER SQ. IN.
COMPRESSION PERPENDICULAR TO GRAIN OF TIMBER	375 LBS. PER SQ. IN.
EQUIVALENT FLUID PRESSURE OF EARTH	30 LBS. PER CU. FT. (MINIMUM)

MATERIAL AND WORKMANSHIP:

EXCEPT AS MAY OTHERWISE BE SPECIFIED ON PLANS OR IN THE SPECIAL PROVISIONS, ALL MATERIAL AND WORKMANSHIP SHALL BE IN ACCORDANCE WITH THE 2024 "STANDARD SPECIFICATIONS FOR ROADS AND STRUCTURES" OF THE N. C. DEPARTMENT OF TRANSPORTATION.

STEEL SHEET PILING FOR PERMANENT OR TEMPORARY APPLICATIONS SHALL BE HOT ROLLED.

CONCRETE:

UNLESS OTHERWISE REQUIRED ON PLANS, CLASS A CONCRETE SHALL BE USED FOR ALL PORTIONS OF ALL STRUCTURES WITH THE EXCEPTION THAT: CLASS AA CONCRETE SHALL BE USED IN BRIDGE SUPERSTRUCTURES, ABUTMENT BACKWALLS, AND APPROACH SLABS; AND CLASS B CONCRETE SHALL BE USED FOR SLOPE PROTECTION AND RIP RAP.

CONCRETE CHAMFERS:

UNLESS OTHERWISE NOTED ON THE PLANS, ALL EXPOSED CORNERS ON STRUCTURES SHALL BE CHAMFERED ¾" WITH THE FOLLOWING EXCEPTIONS: TOP CORNERS OF CURBS MAY BE ROUNDED TO 1½" RADIUS WHICH IS BUILT INTO CURB FORMS; CORNERS OF TRANSVERSE FLOOR EXPANSION JOINTS SHALL BE ROUNDED WITH A ¼" FINISHING TOOL UNLESS OTHERWISE REQUIRED ON PLANS; AND CORNERS OF EXPANSION JOINTS IN THE ROADWAY FACES AND TOPS OF CURBS AND SIDEWALKS SHALL BE ROUNDED TO A ¼" RADIUS WITH A FINISHING STONE OR TOOL UNLESS OTHERWISE REQUIRED ON PLANS.

DOWELS:

DOWELS WHEN INDICATED ON PLANS AS FOR CULVERT EXTENSIONS, SHALL BE EMBEDDED AT LEAST 12" INTO THE OLD CONCRETE AND GROUTED INTO PLACE WITH 1:2 CEMENT MORTAR.

ALLOWANCE FOR DEAD LOAD DEFLECTION, SETTLEMENT, ETC. IN CASTING SUPERSTRUCTURES:

BRIDGES SHALL BE BUILT ON THE GRADE OR VERTICAL CURVE SHOWN ON PLANS. SLABS, CURBS AND PARAPETS SHALL CONFORM TO THE GRADE OR CURVE.

ALL DIMENSIONS WHICH ARE GIVEN IN SECTION AND ARE AFFECTED BY DEAD LOAD DEFLECTIONS ARE DIMENSIONS AT CENTER LINE OF BEARING UNLESS OTHERWISE NOTED ON PLANS. IN SETTING FORMS FOR STEEL BEAM BRIDGES AND PRESTRESSED CONCRETE GIRDER BRIDGES, ADJUSTMENTS SHALL BE MADE DUE TO THE DEAD LOAD DEFLECTIONS FOR THE ELEVATIONS SHOWN. WHERE BLOCKS ARE SHOWN OVER BEAMS FOR BUILDING UP TO THE SLAB, THE VERTICAL DIMENSIONS OF THE BLOCKS SHALL BE ADJUSTED BETWEEN BEARINGS TO COMPENSATE FOR DEAD LOAD DEFLECTIONS, VERTICAL CURVE ORDINATE, AND ACTUAL BEAM CAMBER. WHERE BOTTOM OF SLAB IS IN LINE WITH BOTTOM OF TOP FLANGES, DEPTH OF SLAB BETWEEN BEARINGS SHALL BE ADJUSTED TO COMPENSATE FOR DEAD LOAD DEFLECTION, VERTICAL CURVE ORDINATE, AND ACTUAL BEAM CAMBER.

IN SETTING FALSEWORK AND FORMS FOR REINFORCED CONCRETE SPANS, AN ALLOWANCE SHALL BE MADE FOR DEAD LOAD DEFLECTIONS, SETTLEMENT OF FALSEWORK, AND PERMANENT CAMBER WHICH SHALL BE PROVIDED FOR IN ADDITION TO THE ELEVATIONS SHOWN. AFTER REMOVAL OF THE FALSEWORK, THE FINISHED STRUCTURES SHALL CONFORM TO THE PROFILE AND ELEVATIONS SHOWN ON THE PLANS AND CONSTRUCTION ELEVATIONS FURNISHED BY THE ENGINEER.

DETAILED DRAWINGS FOR FALSEWORK OR FORMS FOR BRIDGE SUPERSTRUCTURE AND ANY STRUCTURE OR PARTS OF A STRUCTURE AS NOTED ON THE PLANS SHALL BE SUBMITTED TO THE ENGINEER FOR APPROVAL BEFORE CONSTRUCTION OF THE FALSEWORK OR FORMS IS STARTED.

REINFORCING STEEL:

ALL REINFORCING STEEL SHALL BE DEFORMED. DIMENSIONS RELATIVE TO PLACEMENT OF REINFORCING ARE TO CENTERS OF BARS UNLESS OTHERWISE INDICATED IN THE PLANS. DIMENSIONS ON BAR DETAILS ARE TO CENTERS OF BARS OR ARE OUT TO OUT AS INDICATED ON PLANS.

WIRE BAR SUPPORTS SHALL BE PROVIDED FOR REINFORCING STEEL WHERE INDICATED ON THE PLANS. WHEN BAR SUPPORT PIECES ARE PLACED IN CONTINUOUS LINES, THEY SHALL BE SO PLACED THAT THE ENDS OF THE SUPPORTING WIRES SHALL BE LAPPED TO LOCK LEGS ON ADJOINING PIECES.

STRUCTURAL STEEL:

AT THE CONTRACTOR'S OPTION, HE MAY SUBSTITUTE ⅞" ∅ SHEAR STUDS FOR THE ¾" ∅ STUDS SPECIFIED ON THE PLANS. THIS SUBSTITUTION SHALL BE MADE AT THE RATE OF 3 - ⅞" ∅ STUDS FOR 4 - ¾" ∅ STUDS, AND STUD SPACING CHANGES SHALL BE MADE AS NECESSARY TO PROVIDE THE SAME EQUIVALENT NUMBER OF ⅞" ∅ STUDS ALONG THE BEAM AS SHOWN FOR ¾" ∅ STUDS BASED ON THE RATIO OF 3 - ⅞"∅ STUDS FOR 4 - ¾" ∅ STUDS. STUDS OF THE LENGTH SPECIFIED ON THE PLANS MUST BE PROVIDED. THE MAXIMUM SPACING SHALL BE 2'-0".

EXCEPT AT THE INTERIOR SUPPORTS OF CONTINUOUS BEAMS WHERE THE COVER PLATE IS IN CONTACT WITH BEARING PLATE, THE CONTRACTOR MAY, AT HIS OPTION, SUBSTITUTE FOR THE COVER PLATES DESIGNATED ON THE PLANS COVER PLATES OF THE EQUIVALENT AREA PROVIDED THESE PLATES ARE AT LEAST 5/16" IN THICKNESS AND DO NOT EXCEED A WIDTH EQUAL TO THE FLANGE WIDTH LESS 2" OR A THICKNESS EQUAL TO 2 TIMES THE FLANGE THICKNESS. THE SIZE OF FILLET WELDS SHALL CONFORM TO THE REQUIREMENTS OF THE CURRENT ANSI/AASHTO/AWS "BRIDGE WELDING CODE". ELECTROSLAG WELDING WILL NOT BE PERMITTED.

WITH THE SOLE EXCEPTION OF EDGES AT SURFACES WHICH BEAR ON OTHER SURFACES, ALL SHARP EDGES AND ENDS OF SHAPES AND PLATES SHALL BE SLIGHTLY ROUNDED BY SUITABLE MEANS TO A RADIUS OF APPROXIMATELY 1/16" OR EQUIVALENT FLAT SURFACE AT A SUITABLE ANGLE PRIOR TO PAINTING, GALVANIZING, OR METALLIZING.

HANDRAILS AND POSTS:

METAL STANDARDS AND FACES OF THE CONCRETE END POSTS FOR THE METAL RAIL SHALL BE SET NORMAL TO THE GRADE OF THE CURB, UNLESS OTHERWISE SHOWN ON PLANS. THE METAL RAIL AND TOPS OF CONCRETE POSTS USED WITH THE ALUMINUM RAIL SHALL BE BUILT PARALLEL TO THE GRADE OF THE CURB.

METAL HANDRAILS SHALL BE IN ACCORDANCE WITH THE PLANS. RAILS SHALL BE AS MANUFACTURED FOR BRIDGE RAILING. CASTINGS SHALL BE OF A UNIFORM APPEARANCE. FINS AND OTHER DEFORMATIONS RESULTING FROM CASTING OR OTHERWISE SHALL BE REMOVED IN A MANNER SO THAT A UNIFORM COLORING OF THE COMPLETED CASTING SHALL BE OBTAINED. CASTINGS WITH DISCOLORATIONS OR OF NON-UNIFORM COLORING WILL NOT BE ACCEPTED. CERTIFIED MILL REPORTS ARE REQUIRED FOR METAL RAILS AND POSTS.

SPECIAL NOTES:

GENERALLY, IN CASE OF DISCREPANCY, THIS STANDARD SHEET OF NOTES SHALL GOVERN OVER THE SPECIFICATIONS, BUT THE REMAINDER OF THE PLANS SHALL GOVERN OVER NOTES HEREON, AND SPECIAL PROVISIONS SHALL GOVERN OVER ALL. SEE SPECIFICATIONS ARTICLE 105-4.